PRODUCT SPECIFICATIONS

6 in LED Color Changing Deep Baffle Recessed Kit with Night Light

Commercial Electric™

53823101
SKU# 1004816472

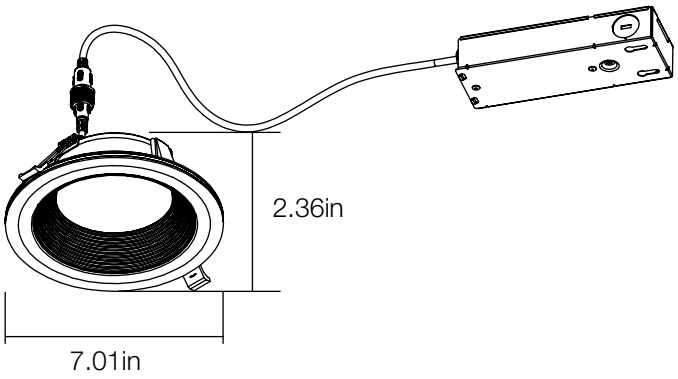

ADVANTAGES

- Lasts 50X Longer than Incandescent
- 50,000 Hours of Rated Life
- 65 Watt Bulb Replacement
- Dimming to 10% without Buzzing or Flickering
- IC Rated for Direct Contact with Insulation
- 90 CRI Provides High Color Quality
- Two Baffle Options: White & Black
- Night Light Trim (Amber 2000K)
- 5-Year Product Warranty
- Night Light Mode with 50 Lumens
- Adjust Color of Light with Integrated Switch-Warm White (2700K), Soft White (3000K), Neutral White (3500K), Bright White (4000K), Daylight (5000K)

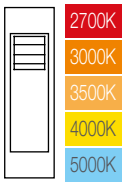

- US Patents - 10,091,855, 10,462,871, 10,492,262

RECESSED MOUNT

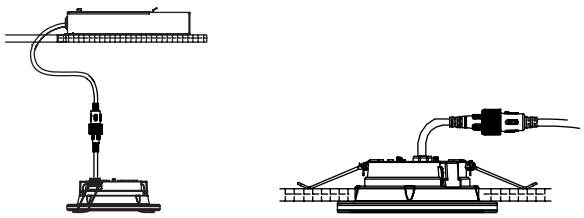

SPECIFICATIONS

Model Number	53823101
SKU	1004816472
OSMID	311084487
Power	16W
AC Voltage, Frequency	120V, 60 Hz
Color Temp (nom.)	2700K / 3000K / 3500K / 4000K / 5000K & 2000K
Operation Temp	-13°F ~ 113°F
CRI	90
Lumen Output (min.)	900 lm
Dimming	YES
Lifetime Rating	L70/50000Hrs
Efficacy	56 lm/watt

PACKAGING

Weight (±0.5 lb)	1.39 lbs
Size (L x W x H) (±0.1 in)	7.01in x 7.01in x 2.36in
Box Dimensions	7.91in x 4.25in x 7.91in
Gross Weight	1.83 lbs
UPC	849489070346

FC UL CERTIFIED AIR-TIGHT™ Certified airtight per ASTM E283-04 CAN BE USED TO COMPLY WITH CALIFORNIA TITLE 24 PART 6 (JA8) T24 EFFICENCY STANDARDS JA8-2019

INCLUDED IN BOX

- LED Downlight (1)
- Remote Junction Box (1)
- Interchangeable Trim (1)
- Baffle Removal Tool (1)

APPLICATIONS

Suitable for Damp Locations