Model: FG18KVTWTCO

18000 Watt Tri-Fuel Open Frame Generator
OPERATOR'S MANUAL

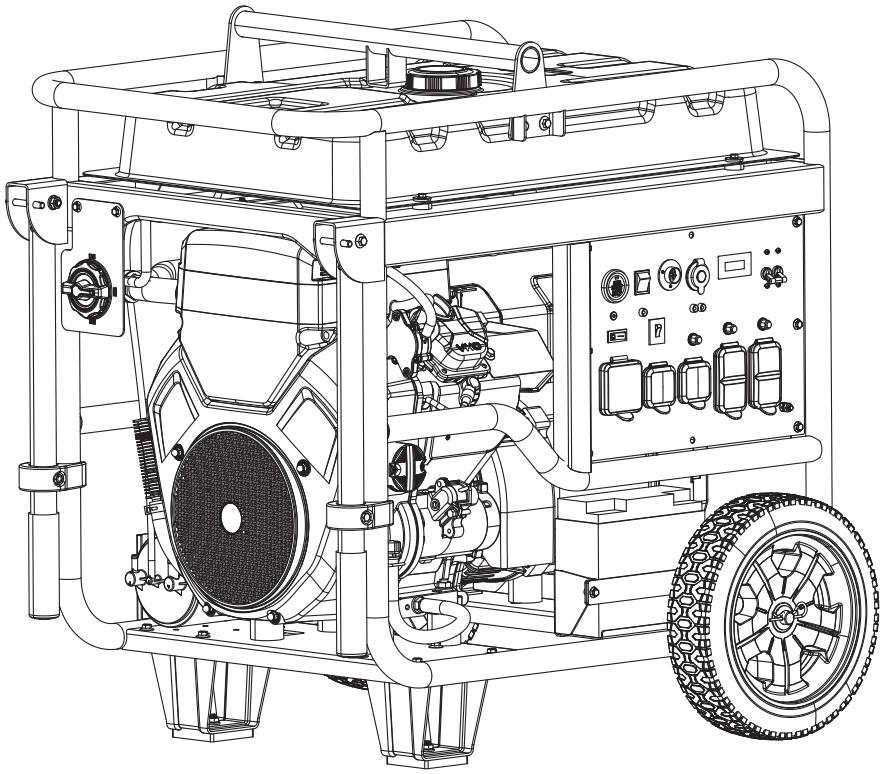

Caution:

- Before using your generator, please read this manual carefully to understand proper use.
- Keep this manual with the generator.

Official Licensed Product

Warning: The Engine Exhaust from this product contains chemicals known to the State of California to cause cancer, birth defects or other reproductive harm.

STOP

DO NOT RETURN TO STORE!

HAVE QUESTIONS OR NEED SERVICE?

888-863-7589 | support@pulsar-products.com

TABLE OF CONTENTS

Introduction 2
Safety 4
Electrical 11
Components 12
Assembly 14
Operation 16
Maintenance 25
Troubleshooting 32
Schematics 33

INTRODUCTION

Thank you for choosing Pulsar Products!
This manual provides instruction on how to operate and use your generator safely and correctly; be sure to read and understand this manual before using your generator. If you have ANY questions, please phone 866.591.8921 M-F or support@pulsar-products.com BEFORE using your generator.

All details and images in this Manual are believed to be accurate at the time of publication.

Pulsar Products reserves the right to make updates to this manual at any time.

Please contact Pulsar Support at **866.591.8921** or **support@pulsar-products.com** for the latest updates.

This manual is a permanent part of the generator set. If the generator is resold, kindly include this manual with the generator.

Safety Warnings and Notices

WARNING: Save This Manual For Future Reference

This manual contains important information regarding the safety, operation, maintenance, and storage of this product. Before use, read carefully and understand all cautions, warnings, instructions, and product labels. Failure to do so could result in serious personal injury and/or property damage.

Safety Definitions

The words DANGER, WARNING, CAUTION, and NOTICE are used throughout this manual to highlight important information. Make sure that the meaning of this safety information is known to all who operate, perform maintenance on, or are near the generator.

⚠ This safety alert symbol appears with most safety statements. It means to pay attention and be alert, your safety is involved! Please read and abide by the message that follows the safety alerts symbol.

⚠ DANGER

DANGER indicates an imminently hazardous situation which, if not avoided, will result in death or serious injury.

⚠ WARNING

WARNING indicates a potentially hazardous situation which, if not avoided, could result in death or serious injury.

⚠ CAUTION

CAUTION indicates a potentially hazardous situation which, if not avoided, may result in minor or moderate injury. It may also be used to alert against unsafe practices.

NOTICE

Failure to follow the instruction may result in the damage to your generator and other property.

Safety Symbols

Follow all safety information contained in this manual and on the generator.

INTRODUCTION

Product Description	18000W Tri-Fuel Open Frame Generator
Engine Type	Duplex Cylinder, 4-Stroke, Forced Air Cooling, Gasoline Engine, OHV
Displacement (cc)	713cc
Peak Power (Gasoline)	18000W
Peak Power (Propane)	16000W
Peak Power (Natural gas)	14400W
Rated Power (Gasoline)	14500W
Rated Power (Propane)	13000W
Rated Power (Natural gas)	11600W
Consumption at Half Load (Gasoline)	4L/h, 1.06gal/h
Fuel Tank Capacity (gal)	40L/10.57gal
Run Time at Half Load (hour)	10h
Voltage Rating	120V/240
Rated Frequency	60Hz
Amperage (120V Rated/Peak)	120.8/150
Starting Type	Electric Start and Remote
Outlet	4*AC 120V 20A GFCI,1*AC 120V 30A, 1*AC 120/240V 30A ,1*AC 120/240V 50A, 1*DC 5V USB-A
Oil Type	SAE 10W-30
Oil Capacity	1.6L (54.1 fl oz)
Maximum Ambient Temperature	40°C (104°F)
Product Dimensions (in)	35.4 x 24.4 x 33.5
NW (lbs)	348.33
Warranty	3 Years

NOTICE

This product is designed and rated for continuous operation at ambient temperatures between 23°F (–5°C) and 104°F (40°C). If needed, this product can be operated in extremely hot or extremely cold temperatures for short periods. If the product is exposed to extreme temperatures during storage, it should be brought back within the op-timal temperature range before operation. This product must always be operated outdoors in a well-ventilated area and far away from doors, windows, and other vents.

Maximum wattage and current are subject to and limited by such factors as fuel BTU content, ambient temperature, altitude, engine conditions, etc. Maximum power decreases about 3.5% for each 1,000 feet above sea level, and will also decrease about 1% for each 10°F (6°C) above 60°F (16°C) ambient temperature.

SAFETY

Before operating your generator, you must read and understand the manual and familiarize yourself with the safe operation practices.

SYMBOL	DESCRIPTION
	Safety Alert Symbol
	Electrocution Hazard
	Asphyxiation Hazard
	Burn Hazard. DO NOT touch hot surfaces.
	Electrical Shock Hazard
	Fire Hazard
	Maintain Safe Distance
	Lifting Hazard
	Read Manufacturer’s Instructions
	DO NOT Operate in Wet Conditions
	Ground. Consult with electrician to determine grounding requirements before

Safety Precautions

⚠ DANGER

Using a generator indoors CAN KILL YOU IN MINUTES.

Generator exhaust contains carbon monoxide. This is a poison you cannot see or smell.



NEVER use inside a home or garage, EVEN IF doors and windows are open.



ONLY use OUTSIDE and far away from windows, doors, and vents.

⚠ WARNING

POISONOUS GAS HAZARD: Engine exhaust contains carbon monoxide, a poisonous gas that could kill you in minutes. You CAN NOT smell it, see it, or taste it. Even if you do not smell exhaust fumes, you could still be exposed to carbon monoxide gas.

Operate this product ONLY outside far away from windows, doors, and vents to reduce the risk of carbon monoxide gas from accumulating and potentially being drawn towards occupied spaces.

Install battery-operated carbon monoxide alarms or plug-in carbon monoxide alarms with battery backup according to the manufacturer's instructions. Most smoke alarms cannot detect carbon monoxide gas.

DO NOT run this product inside homes, garages, basements, crawlspaces, sheds, or other partially enclosed spaces even if using fans or opening doors and windows for ventilation. Carbon monoxide can quickly build up in these spaces and can linger for hours, even after this product has shut off.

ALWAYS place this product downwind and point the engine exhaust away from occupied spaces. If you start to feel sick, dizzy, or weak while using this product, shut it off and get to fresh air IMMEDIATELY - then see a doctor; you may have carbon monoxide poisoning.

IMPORTANT SAFETY INSTRUCTIONS

⚠ DANGER Generator exhaust contains high levels of carbon monoxide (CO), an invisible, odorless, and extremely poisonous gas. If you smell exhaust fumes, you are breathing carbon monoxide. But, even if you do not smell exhaust fumes you may be inhaling CO.

ONLY operate generators outside, in a well-ventilated area. NEVER operate generators indoors, doing so CAN KILL YOU IN MINUTES.

- **Correct Use –** Only use generators outside and downwind, far away from windows, doors and vents. Always direct exhaust away from occupied spaces. Always install battery-powered carbon monoxide detectors or plug-in carbon monoxide detectors with battery back-up in living areas. *See Figure 1.*
- **Incorrect Use –** NEVER use a generator in a home, garage, basement, attic, crawl space or any other fully or partially enclosed area. Areas such as these can allow dangerous levels of carbon monoxide to accumulate. An open door or a running fan WILL NOT provide adequate ventilation. *See Figure 2.*

If feeling dizzy, weak, or sick while using the generator, move to fresh air immediately. Contact a doctor. This may be carbon monoxide poisoning.

⚠ DANGER Fire and electrocution hazard. **DO NOT** connect to a building's electrical system unless the generator and a transfer switch have been properly installed and the electrical output has been verified by a qualified electrician. The connection must isolate the generator power from utility power and must comply with all applicable laws and electrical codes. Failure to properly isolate the generator power could cause property damage and create a dangerous backfeed of electricity which could kill or seriously injure utility workers.

⚠ DANGER Electrocution hazard. **NEVER** use the generator in a location that is wet or damp. **NEVER** expose the generator to rain, snow, water spray, or standing water while in use. Protect the generator from all hazardous weather conditions. Moisture or ice can cause a short circuit or other malfunction in the electrical circuit.

⚠ WARNING Become familiar with all the instructions, safety warnings, illustrations, and specifications provided with this product. Failure to follow the manufacturer's instructions may result in electric shock, fire, and/or carbon monoxide poisoning that can lead to death or serious injury.

NOTICE Install battery-powered carbon monoxide detectors or plug-in carbon monoxide detectors with battery back-up in living areas.

- This product should ONLY be used outdoors.

FIG. 1

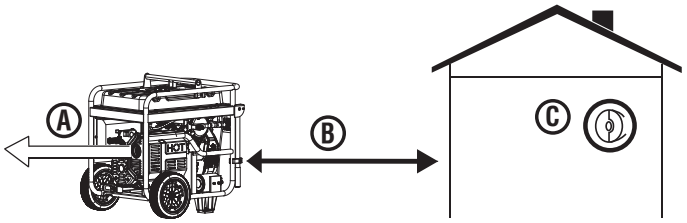

A - Exhaust (CO)
B - Only use OUTSIDE and FAR AWAY from windows, doors, and vents
C - CO detectors in living areas

FIG. 2

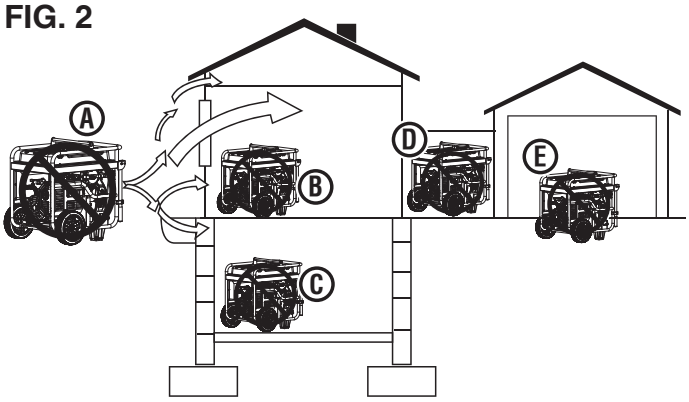

A - Exhaust (CO)
B - Living Area
C - Basement Crawlspace
D - Entryway/Porch/Mudroom
E - Garage

- NEVER use a generator in a home, garage, basement, attic, crawl space or any other fully or partially enclosed area. Areas such as these can allow dangerous levels of carbon monoxide to accumulate. Carbon monoxide (CO), an invisible, odorless, and extremely poisonous gas CAN KILL YOU IN MINUTES.
- Only use OUTSIDE and far away from windows, doors, and vents as recommended by the US Department of Health and Human Services Centers for Disease Control and Prevention. Specific homes and/or wind conditions may require additional distance.
- The National Electrical Code requires the use of a transfer switch or other suitable transfer equipment whenever a portable generator is connected to a building's electrical system. Transfer switches isolate generator power from utility power and prevent backfeeding of electric power into the utility system.

  NOTE: A transfer switch must be installed by a qualified electrician in accordance with applicable electrical codes. Some jurisdictions may require the installation to be inspected by local authorities. Keep all relevant installation, inspection, and maintenance information.
- Never use the generator to power medical support equipment.
- Never expose the generator to rain, snow, water spray, or standing water while in use. Store and operate the unit in a dry or covered (but not enclosed) location.
- Do not let children or untrained individuals operate the generator.

- Keep children, bystanders, and pets a minimum of 10 ft. away from a running generator.
- Maintain Safe Distance. While operating and storing, keep at least five feet of clearance on all sides of the generator, including overhead. Turn the unit off and allow it to cool a minimum of 30 minutes before storage. Heat created by the muffler and exhaust gases could be hot enough to cause serious burns and/or ignite combustible objects.
- Do not operate the unit in areas where combustible or hazardous materials are stored including gasoline and natural gas filling stations.
- Do not operate the generator while barefoot, with wet hands or feet, while standing in water or in wet conditions.
- Do not use this unit when tired or under the influence of drugs, alcohol, or medication.
- Burn Hazard. Do not touch hot surfaces.
- Do not contact the muffler or engine. They are very HOT and will cause severe burns. Do not put body parts or any flammable or combustible materials in the direct path of the exhaust.
- Keep hands, fingers, feet, and other body parts away from all moving parts of the generator.
- Do not connect worn or damaged electrical cords to the generator. NEVER touch frayed or exposed wires.
- Do not operate the generator on an incline. The unit should always be placed on a flat stable surface.
- Inspect the physical condition of the product prior to each use. Look for loose bolts, fluid leaks, and other signs of wear. Replace all damaged items. For replacement parts or assistance, contact our customer service team.
- For optimal performance, use the generator in temperatures between 23°F (-5°C) and 104°F (40°C) with a maximum relative humidity of 90%.
- Before starting the generator, inspect all fluids (oil and gasoline).
- Do not remove the oil dipstick or fuel cap when the generator is running.
- Securely tighten the oil dipstick after adding oil and the fuel cap after adding gasoline.
- Avoid skin contact with engine oil or gasoline. Wear protective clothing and equipment. Wash all exposed skin with soap and water. Prolonged skin contact with gasoline or engine oil may cause severe skin irritation and other adverse reactions.
- Generators vibrate and bounce during normal operation. Inspect the generator and all of the cords connected to it for any damage that may have resulted from the vibration. Replace or repair damaged items as needed. Do not use the generator or any items that show signs of damage.
- All electrical tools and appliances operated from this generator must be properly grounded by use of a third wire or be double-insulated.
- Before transporting the generator, disconnect the spark plug boot, drain the fuel tank and properly restrain the unit.
- Fuel or oil may leak from the generator during transport. Place a towel, plastic sheet, or absorbent pad beneath the unit to protect the transportation vehicle.
- To prolong the life of this product, follow the instructions in the *Maintenance* section of this manual.
- Replace damaged or worn items with recommended or equivalent replacement parts. Using an incorrect or incompatible part might create a hazard that could result in serious personal injury.
- Always remove any tools or other service equipment used during maintenance away from the generator before operating.

GROUNDING

⚠ WARNING Shock hazard. Failure to properly ground the generator can result in electric shock.

NOTICE Only use grounded 3-prong extension cords, tools, and appliances, or double-insulated tools and appliances.

The generator neutral is bonded to the frame. There is a permanent conductor between the generator (stator wire) and the frame. If this generator will be used only with cord and plug equipment connected to the receptacles mounted on the generator, National Electric Code does not require that the unit be grounded. However, other methods of using the generator may require grounding to reduce the risk of shock or electrocution.

Before using the ground terminal, consult a qualified electrician, electrical inspector, or local agency having jurisdiction for local codes or ordinances that apply to the intended use of the generator.

DISCONNECTING THE BONDED NEUTRAL

See Figure 3.

The bonded neutral should only be removed under specific circumstances. Consult a qualified electrician to determine if circumstances require disconnecting the bonded neutral.

- Remove the alternator cover.
- Remove the green/yellow bonded jumper wire from the ground bolt and unmarked terminal connection. Reinstall the bolts and tighten securely.
- Keep the bonded jumper wire in a secure location so that the generator can be returned to the original configuration.

NOTICE Apply a new “NEUTRAL UNBONDED” Label over the “NEUTRAL BONDED TO FRAME” label on the front of the control panel.

SAFETY PRECAUTIONS FOR GASOLINE AND GASOLINE VAPOR

⚠ DANGER Fire and explosion hazard. Gasoline is highly explosive and flammable and can cause severe burns or death.

FIG. 3

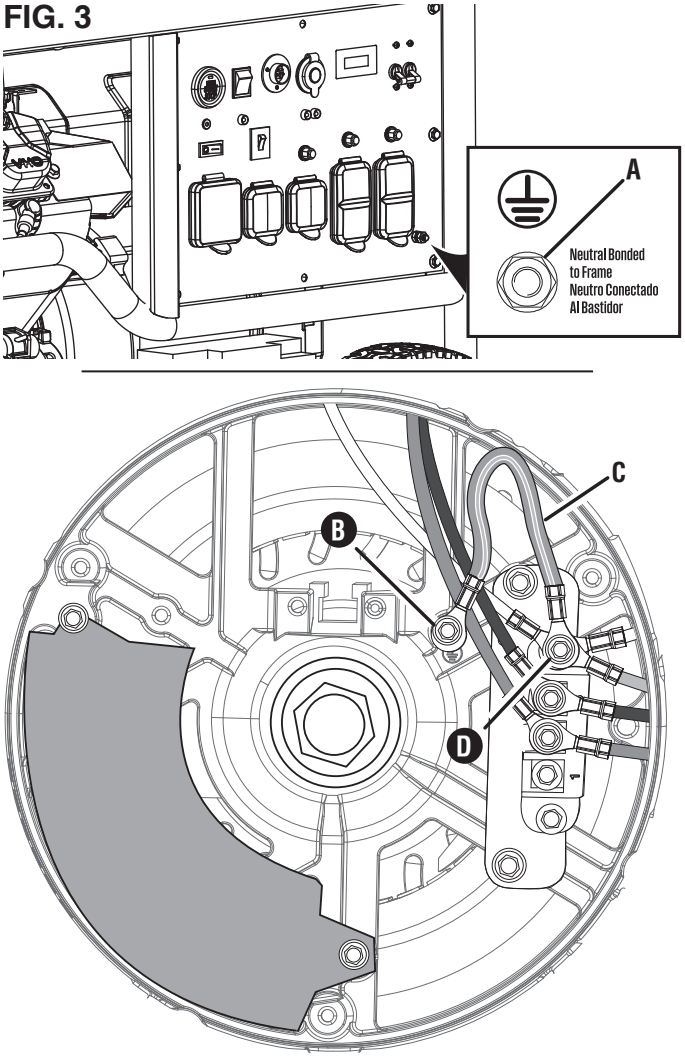

A - Ground Terminal
B - Ground Bolt
C - Bonded Jumper Wire (Green/Yellow)
D - Unmarked Terminal Connection

⚠ WARNING Fire and Burn Hazard. NEVER loosen or remove the fuel cap while the generator is running. Turn the unit off and allow it to cool for at least five minutes before adding gasoline. Loosen the fuel cap slowly.

⚠ WARNING In case of a gasoline fire, do not attempt to extinguish the flame unless the fuel selector switch is in the **OFF** position. Introducing an extinguisher to a generator with an open fuel valve could create an explosion hazard.

- Fire Hazard. Gasoline is highly flammable. Handle with care.
- Never use gasoline as a cleaning agent.
- Gasoline is a skin irritant and needs to be cleaned up immediately if it comes in contact with the skin.
- Do not store gasoline near furnaces, water heaters, or any other appliances that produce heat or have automatic ignitions.
- Keep gasoline away from sparks, open flames, pilot lights, heat, and other sources of ignition.
- Store any containers containing gasoline in a well-ventilated area, away from any combustibles or source of ignition.
- ALWAYS store gasoline in a container approved for gasoline. Unapproved containers can break or deteriorate allowing gasoline or gasoline vapors to escape which can create a serious hazard.
- Gasoline has a distinctive odor, this will help detect potential leaks quickly.
- Gas vapors can cause a fire if ignited.
- Do not smoke when handling fuel, adding fuel to the generator, or emptying the gas tank.
- Wear eye protection while refueling.
- Before adding fuel to the generator, turn the unit off and allow it to cool a minimum of five minutes. If necessary, move the unit to level ground.
- Do not remove the fuel tank cap when the generator is running.
- Loosen the fuel cap slowly to safely release pressure, keep gasoline from escaping around the cap, and to avoid the heat from the muffler igniting fuel vapors.
- NEVER fill the gasoline tank beyond the maximum fill ring on the fuel screen. Keeping gasoline levels at or below the fill ring will allow for fuel expansion. Overfilling the fuel tank can result in a sudden overflow of gasoline and result in spilled gasoline coming in contact with HOT surfaces.
- Spilled fuel can ignite. Clean any spills immediately and allow area to dry before operating the generator. NEVER attempt to burn off spilled fuel.
- Securely tighten the fuel cap after adding gasoline.
- Do not cover the fuel cap while the generator is in operation. Covering the cap may cause the engine to fail or damage the product.
- Drain fuel before storing the unit. Store the unit and the fuel separately in well-ventilated areas away from sparks, open flames, pilot lights, heat, and other sources of ignition.
- Turn the unit off and allow it to cool a minimum of 30 minutes before draining fuel.

LIQUID PETROLEUM GAS (LPG/PROPANE)

⚠ WARNING Fire and explosion hazard. Never use a gas container, LPG/propane hose, propane cylinder or any other fuel item that appears to be damaged. If there is a strong smell of propane while operating the generator, fully close the propane cylinder valve immediately. Once the propane is off, use soapy water to check for leaks on the hose and connections on the tank valve and the generator. Do not smoke or light a cigarette or check for leaks using any open flame source such as a match or lighter. If a leak is found, contact a qualified technician to inspect and repair the LPG/propane system before using the generator.

⚠ CAUTION Fire and explosion hazard. Only use approved Propane cylinders with an Overfilling Prevention Device (OPD) valve. Always keep the tank in a vertical position with the valve on top and placed at ground level on a flat surface. Do not allow tanks to be near any heat source. When transporting and storing, turn the propane cylinder valve to the fully closed position and disconnect the tank. Be sure to always cover the generator inlet and tank outlet with protective plastic caps.

- LPG/Propane is highly flammable and explosive.
- In case of a LPG/Propane fire, DO NOT attempt to extinguish the flame if the fuel valve is in the gas position. Introducing an extinguisher to a generator with an open fuel valve could create an explosion hazard.
- LPG/Propane can settle in low places because it is heavier than air.
- LPG/Propane has a distinctive odor added to help detect potential leaks. If there is a smell, **DO NOT** use the engine.
- Always keep a propane cylinder in an upright position.
- When exchanging propane cylinders, be sure the tank valve is the same type.
- LPG/propane will burn the skin. Prevent skin contact at all times.
- Keep the propane cylinder away from the generator exhaust.
- Large (500–1000 gallon) propane cylinders will require a certified plumber to install the fuel line to the generator and the loose regulator is not used (the regulator that is attached to the fuel tank). The pressure as measured at the regulator mounted to the generator must be 7 in. to 14 in. of water column. A certified plumber must ensure that the pressure is correct or install a step down regulator if needed.
- Be sure the generator and propane cylinder are on a flat surface before operating.
- If there is a propane odor do not start the unit because there may be a potential leak. Never place a propane cylinder near the engine exhaust.
- When transporting, be sure the propane cylinder and LPG/propane hose are not attached to the generator.
- Store propane cylinder away from sparks, open flames, pilot lights, heat, and other sources of ignition.
- Do not store propane cylinder near furnaces, water heaters, or any other appliances that produce heat or have automatic ignitions.

NATURAL GAS (NG)

⚠ WARNING Fire and explosion hazard. Never use a natural gas supply line, natural gas hose (not included), or any other fuel item that appears to be damaged. If there is a strong smell of natural gas while operating the generator, close off all gas sources immediately. Once the natural gas is off, use soapy water to check for leaks on the hose and connections on the branch supply and the generator. Do not smoke or light a cigarette or check for leaks using any open flame source such as a match or lighter. If a leak is found, contact a qualified plumber to inspect and repair the natural gas system before using the generator.

⚠ WARNING Natural gas (NG) is highly explosive and flammable and can cause severe burns or death.

⚠ WARNING Do not route the natural gas hose under a deck, floating patio, or other structure. The hose must be visible.

⚠ WARNING For proper installation, consult a licensed professional natural gas plumber.

⚠ WARNING Turn off the gas at the natural gas supply line when the generator is not in use.

NOTICE Generator installation must strictly comply with all applicable federal, state, and local laws as well as codes and regulations. Laws and regulations pertaining to the installation of this equipment are routinely updated and may vary based on relevant local jurisdiction, how the generator will be used, and the installation site. Check with the authority having local jurisdiction (AHJ) for a complete list of laws, regulations, and codes that may apply. **Information in this manual should never be interpreted in a way that conflicts with any local, state, or federal laws. When in doubt, always abide by local laws.**

- Inspect natural gas hose (not included) before each use and replace if damaged.
- Only use natural gas hoses that comply with local, state, or federal laws. Hose requirements may vary in different regions. Check with the authority having local jurisdiction (AHJ).
- Confirm that the natural gas supply line from the house was properly installed by a qualified plumber and that the natural gas hose is securely connected before using the generator.
- Before starting the engine, purge the natural gas supply line and perform a leak test.
- Always disconnect the generator and natural gas hose from the natural gas supply line when the gas supply is being pressure tested.
- Keep the natural gas hose and natural gas supply line away from the muffler and other heated surfaces.
- Keep a fire extinguisher near the generator at all times.

LEAK TESTING

See Figure 4.

NOTICE Connections on the hose and the natural gas/propane inlet were tested at the factory to be sure there were no gas leaks. However, shipping and handling may have loosened connections. It is best practice to always test for leaks before using the generator.

To test for natural gas (NG) leaks:

- Connect the natural gas hose to the natural gas/propane inlet on the generator and to the natural gas supply line.
- Brush the inlet, hose connections, and gas supply valve with a soapy swith a soapy water solution.
- If bubbles begin growing, there is a leak.
  - If the leak is at the inlet, contact customer service. **DO NOT USE THE GENERATOR**.
  - If the leak is at the hose connections, reinstall the hose securely and perform the check again. If the leaks persist, **DO NOT USE THE GENERATOR**.
  - If the leak is at the natural gas supply line, **DO NOT USE THE GENERATOR**.

To test for Propane leaks:

- Connect the propane hose to the natural gas/propane inlet on the generator and to the cylinder valve.
- Open the cylinder valve. If there is a rushing sound, immediately turn off the cylinder valve. This noise indicates a significant leak at the connection. Replace the cylinder or have it repaired.
- Brush the inlet, hose connections, and LP gas cylinder with a soapy with a soapy water solution.
- If bubbles begin growing, there is a leak.
  - If the leak is at the inlet, contact customer service. **DO NOT USE THE GENERATOR**.
  - If the leak is at the hose connections, reinstall the hose securely and perform the check again. If the leaks persist, **DO NOT USE THE GENERATOR**.
  - If the leak is at the cylinder, do not use or move the cylinder. Contact the fire department or the gas supplier.

FIG. 4

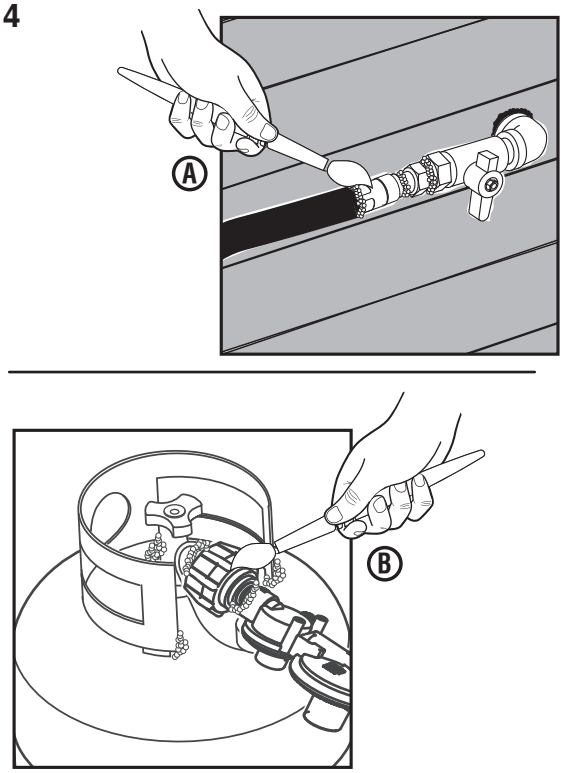

A - Leak Testing with Soapy Water (Natural Gas)
B - Leak Testing with Soapy Water (Propane)

NOTICE

Improper treatment of the generator could damage it and shorten its life.

- Use generator only for intended applications.
- If you have questions about intended use, ask a dealer or contact your local Pulsar service center.
- Operate generator only on solid, level surfaces.
- DO NOT expose the generator to excessive moisture, dust, dirt, or corrosive vapors.
- DO NOT insert any objects through cooling slots.
- If connected devices overheat, turn them off and disconnect them from the generator.

Shut off the generator if:
- Electrical output is lost.
- Equipment sparks, smokes, or emits flames.
- Unit vibrates excessively.

Parallel Kit Precautions

⚠ WARNING

To prevent serious injury, death, and generator and/or equipment damage from electric shock and fire:

1. Follow Parallel Kit instructions provided with it for connection and use of a Parallel Kit.
2. Only connect two identical Inverter Generators together using a Parallel Kit.
3. Connect Parallel Kit only to terminals marked “Parallel” on the front of the Generator.
4. Do not remove or connect a Parallel Kit while the Generator is running.
5. Do not use a Parallel Kit that is attached to only one Generator.

Carbon Monoxide Safety

Carbon Monoxide

Generators are very convenient, but they can also be very dangerous. All fuel-burning appliances and equipment release a poisonous gas called carbon monoxide. Carbon monoxide (also known as CO) can be dangerous for humans and pets, even in small amounts, because it blocks oxygen from getting into your body. Carbon monoxide poisoning can lead to death in a very short time. It is odorless, tasteless and invisible, so you may be exposed without knowing it. That is why carbon monoxide is sometimes called “the silent killer.”

CO Sentry

The CO Sentry system was created to protect from dangerous carbon monoxide. Just like the detector for your home the CO Sentry tests the air for dangerous levels of carbon monoxide. If dangerous levels of carbon monoxide are detected this generator will automatically shut off.

⚠ WARNING

Automatic shut off accompanied with a flashing RED light in the CO Sentry portion of the control panel is an indication that the generator was improperly located. If you start to feel sick, dizzy, weak, or carbon monoxide detectors in your home indicate an alarm, get to fresh air immediately. Call emergency services. You may have carbon monoxide poisoning.

CO Sentry Indicator Lights

RED
Carbon monoxide has accumulated around the generator. After shut off, the RED indicator light in the CO Sentry area of the control panel will flash to provide notification that the generator was shut off due to an accumulating CO hazard. The RED light will flash for at least five minutes after a CO shut off. Move the generator to an open, outdoor area far away from occupied spaces with exhaust pointed away. Once relocated to a safe area, the generator can be restarted. Introduce fresh air and ventilate the area where the generator had shut down.

YELLOW
A CO Sentry system fault occurred. When a system fault occurs, the generator is automatically shut down and the YELLOW indicator light in the CO auto shut off area of the control panel will flash to provide notification that a fault has occurred. The YELLOW light will flash for at least five minutes after a fault. The generator can be re-started, but may continue to shut off.

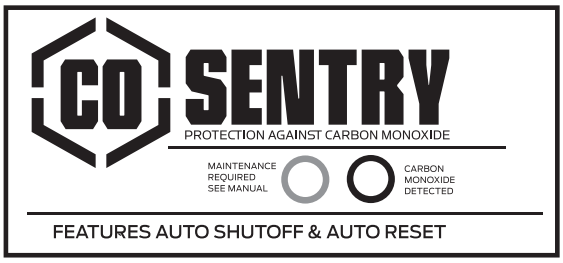

ELECTRICAL

GENERATOR CAPACITY

NOTICE Do not overload the generator. Exceeding the wattage/amperage capacity can damage the generator and/or electrical devices connected to it.

Review the Specifications for this generator and record the running (continuous) and peak (starting) watts. In general the higher the wattage, the more devices can be powered at the same time. The total power requirements of all connected devices must be considered. Power requirements are often listed on a data label or nameplate.

To determine power requirements:

- Choose the devices to power simultaneously.
- Record and total the running (continuous) watts of each device. The generator must continuously produce this amount of wattage to keep the devices running.
- Record the peak (starting) watts for each device. This is the momentary surge of power required to start electric motors in some tools and appliances.
- Select the device with the highest peak (starting) wattage. Add the peak (starting) watts for that device to the total running (continuous) watts for all the connected devices to determine the total peak wattage requirement for the generator.

  NOTE: Total peak wattage requirement assumes intermittent starting of devices. Adjust estimate if devices reach peak wattage at the same time.

MANAGING GENERATOR POWER

To extend the service life of the generator, use caution when adding electrical loads. Disconnect all loads before starting the generator. The safest way to manage generator power is to add loads sequentially by doing the following:

- Remove all loads and start the generator as described later in this manual.
- Connect and start the largest device or appliance. Power requirements are often listed on a data label or nameplate.
- Allow the generator output to stabilize. Once stable, the engine should run smoothly and the device should function properly.
- Connect and start the next largest device or appliance.
- Allow the generator output to stabilize.
- Repeat this process for each additional load.

EXTENSION CORDS

⚠ WARNING Asphyxiation hazard. Extension cords running directly into the home increase the risk of carbon monoxide poisoning through any openings. If an extension cord running directly into the home is used to power indoor items, there is a risk of carbon monoxide poisoning to people inside the home. Always use battery-powered carbon monoxide detector (s) that meet current UL 2034 safety standards when running the generator. Regularly check the detector (s) battery.

⚠ WARNING Asphyxiation hazard. When operating the generator with extension cords, be sure the generator is located in an open, outdoor area far away from occupied spaces with exhaust pointed away.

⚠ WARNING Fire and electrocution hazard. Never use worn or damaged extension cords. Damaged or overloaded extension cords could overheat, arc, and burn resulting in death or serious injury.

Before connecting an AC appliance or power cord to the generator:

- Use grounded extension cords, tools, and appliances, or double-insulated tools and appliances.
- Be sure the tool or appliance is in good working order. Faulty appliances or power cords can create a potential for electric shock.
- Be sure the electrical rating of the tool or appliance does not exceed the rated power of the generator or the receptacle being used.

EXTENSION CORD SIZING

Be sure the extension cord can carry the required load. Cables that are too small may cause a voltage drop that can cause the cord to overheat or cause property damage. Refer to the cord manufacturer's guidelines for the appropriate size and length.

COMPONENTS

FIG. 6

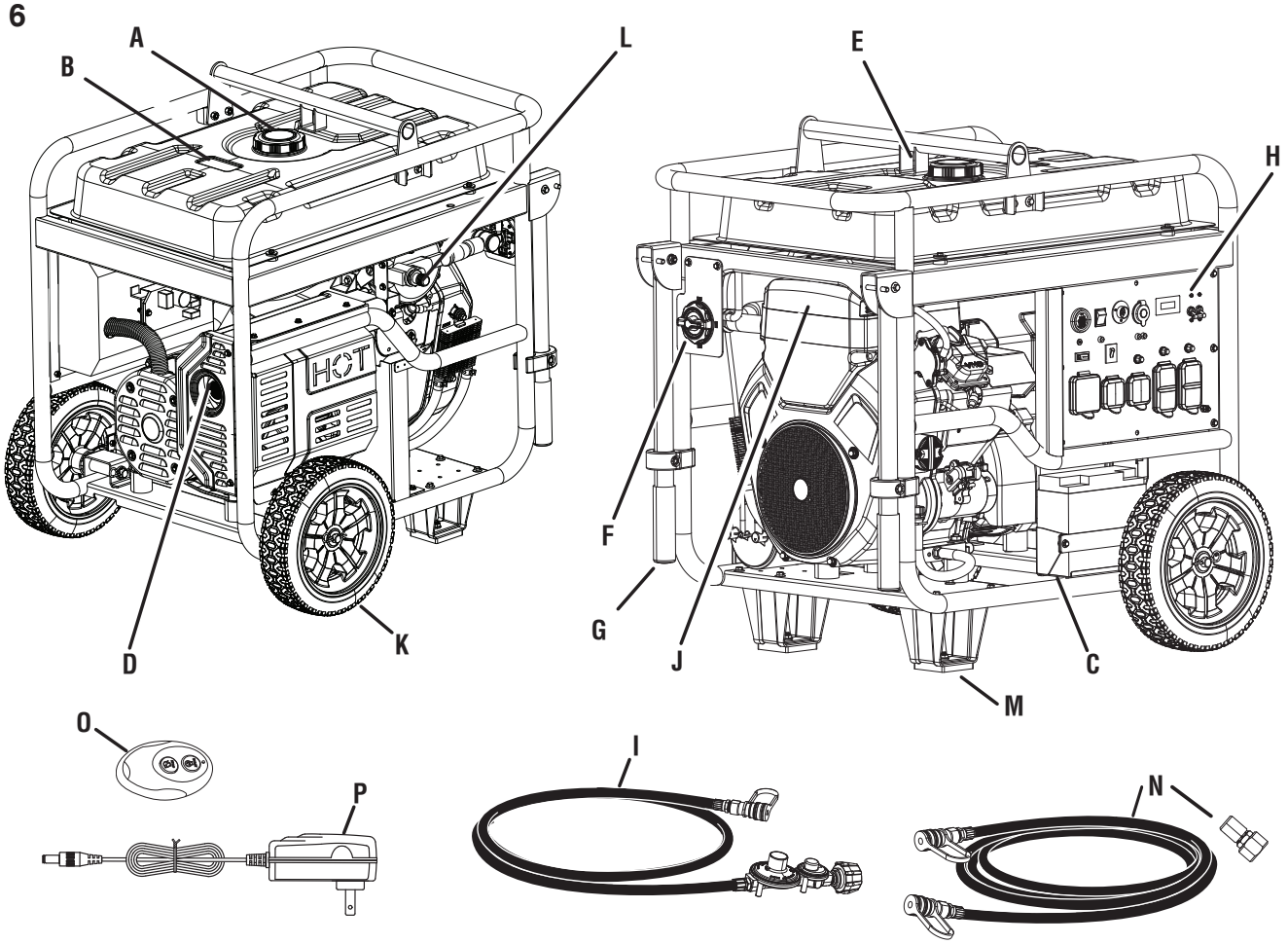

A - Fuel Cap
B - Fuel Gauge
C - Battery
D - Muffler/Spark Arrestor
E - Lifting hook
F - Fuel Selector Switch
G - Handle
H - Control Panel
I - Propane Hose
J - Air Filter Cover
K - Wheel
L - Natural Gas/Propane Inlet
M - Stabilizer
N - Natural Gas Hose and Gas adapter
O - Key Fob
P - Charger

UNDERSTANDING THE GENERATOR

To reduce the risk of injury and product failure, read and understand the information in this user manual as well as the information on the product labeling.

FUEL CAP

Add fuel here.

FUEL GAUGE

Used to observe fuel conditions.

BATTERY

Connect before start.

FUEL SELECTOR SWITCH

Use the fuel selector switch to choose a gasoline, propane, or natural gas fuel source.

MUFFLER / SPARK ARRESTOR

The spark arrestor prevents sparks from exiting the muffler.

HANDLE

Helps transport the generator.

CONTROL PANEL

The control panel contains the outlets and operational controls.

LPG/NG SUPPLY HOSE AND INIET CONNECTOR

Gas connections must be secure, tight and comply with all local regulations.

AIR FILTER COVER

Clean or replace the air filter.

WHEEL

Helps transport the generator.

BATTERY CHARGING PORT

Use the battery charging port along with the included battery charger to charge the battery.

COMPONENTS

FIG. 7

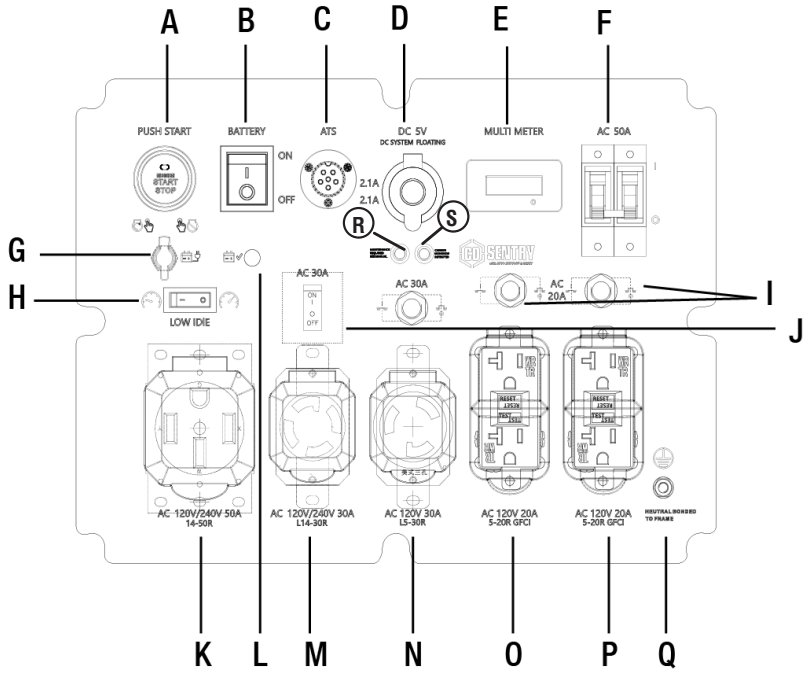

A - Engine Start/Stop Button
B - Battery Switch
C - ATS Interface
D - USB Ports
E - Data Center
F - Main Circuit Breaker

G - Battery Indicator
H - Low Idle Switch
I - 20 Amp and 30 Amp Circuit Breakers
J - 30 Amp Circuit Breakers
K - 120/240 Volt AC 50 Amp Receptacle
L - Battery Indicator

M - 120/240 Volt AC 30 Amp Receptacle
N - 120 Volt AC 30 Amp Receptacle
O - 120 Volt AC 20 Amp GFCI Receptacles
P - 120 Volt AC 20 Amp GFCI Receptacles
Q - Ground Terminal
R - Service Generator LED
S - Automatic Shutoff LED

ENGINE START / STOP BUTTON
Push once to automatically start the engine. Push again to stop the engine.

REMOTE START
Use the key fob to start the generator remotely.

BATTERY SWITCH
Enables or disables electric start. The battery switch must be in the ON positoin to use remote start.

ATS INTERFACE
For connecting to ATS control box.

USB PORTS
Two-port 5V/2.1A USB outlet. Accepts Type A USB plugs.

DATA CENTER
Displays voltage, frequency, total hour meter, and run/maintenance timer.

MAIN CIRCUIT BREAKER
The main circuit breaker controls total output of all outlets to protect the generator from overload or short circuit.

BATTERY INDICATOR
Indicates that battery power is available. Light will remain illumi-nated while the battery has charge.

GROUND TERMINALS
The ground terminals are used to externally ground the generator.

CO SENSOR INDICATOR LIGHTS

The CO Sensor monitors for the accumulation of poisonous carbon monoxide gas. If increasing levels of CO gas are detected, the CO Sensor automatically shuts down the engine.

CIRCUIT BREAKERS (20A AND 30A)
The circuit breakers protect individual circuits from electrical overload.

NOTE: The 20 amp circuit breaker limits the current that can be delivered through the 5-20R GFCI receptacles to 20 amps and the 30 amp circuit breaker limits the current for the L14-30R receptacle to 30 amps.

120V AC, 20A GFCI RECEPTACLES
This unit has four single phase, 60 Hz receptacles capable of car-rying a maximum of 20 amps.

120V AC, 30A RECEPTACLE
This receptacle can supply either 120V up to 30 amps.

120/240V AC, 30A RECEPTACLE
This receptacle can supply either 120V or 240V up to 30 amps.

120/240V AC, 50A RECEPTACLE
This receptacle can supply either 120V or 240V up to 50 amps.

ASSEMBLY

⚠ WARNING Weight hazard. Always have assistance when lifting the generator. Never attempt to lift the unit by the handle. Hold the unit by the frame and use proper lifting techniques to reduce the risk of back injury.

REMOVING CARTON CONTENTS

⚠ WARNING This product requires assembly. Do not attempt to operate this product if any items in the **INCLUDED LIST** are already assembled when removing the carton contents. These items are not assembled by the manufacturer and should require customer assembly. Using an improperly assembled product can be hazardous and could result in serious personal injury.

- Carefully cut down the sides of the packaging and remove the carton contents.
- Inspect the carton contents. Confirm that all the items in the **INCLUDED LIST** are present and undamaged.
- Recycle or dispose of the packaging materials properly.

INCLUDED LIST

See Figure 8.

Generator, Wheels, Axles, Washers, Hitch Pins, Bolts, Stabilizers, Key Fob, Charger, Propane Gas Hose, Engine Oil (SAE 10W 30), Funnel, Spark Plug Socket Wrench, Assembly Wrench, Quick Start Guide, User Manual

If any parts are missing, contact our service team at call 1-888-863-7589.

INSTALLING THE LIFTING HOOK BRACKET

See Figure 9.

- Place the generator on a flat surface.
- Align the lifting hook bracket with the mounting brackets on the top of the fuel tank. Secure with the four bolts.
- Tighten bolts securely.

INSTALLING THE WHEELS

See Figure 10.

- Place the generator on a flat surface.
- Lift the muffler side of the generator high enough to gain access to the bottom of the frame.
- Place props beneath the generator to serve as a temporary support.
- Locate the axles, wheels, washers, and hitch pins.
- Insert an axle through the middle of a wheel, washer, and the frame as shown.
- Push a hitch pin into the axle until the center of the pin rests against the top of the axle.
- Repeat these steps to install the second wheel.

CONNECTING THE BATTERY

See Figure 11.

- Connect the positive (+) battery cable (red boot) to the positive (+) battery post. Secure the boot over the battery post.

FIG. 8

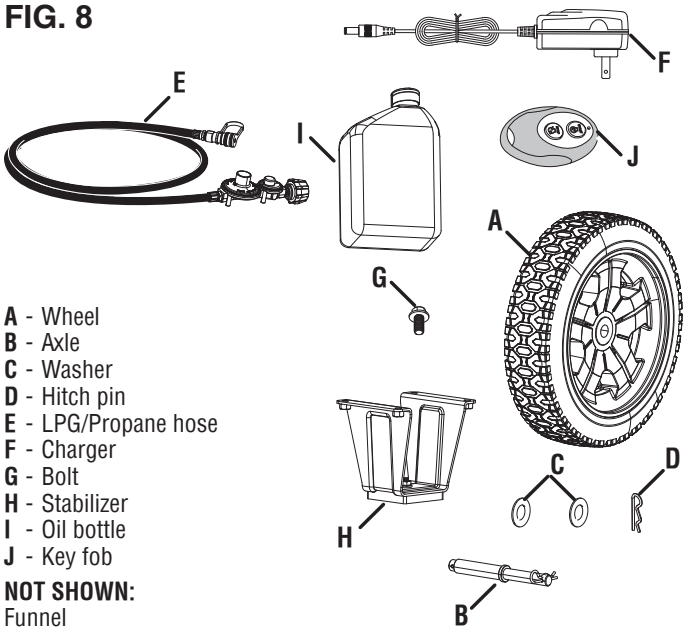

A - Wheel
B - Axle
C - Washer
D - Hitch pin
E - LPG/Propane hose
F - Charger
G - Bolt
H - Stabilizer
I - Oil bottle
J - Key fob

NOT SHOWN:
Funnel
Spark plug socket wrench
Assembly Wrench

FIG. 9

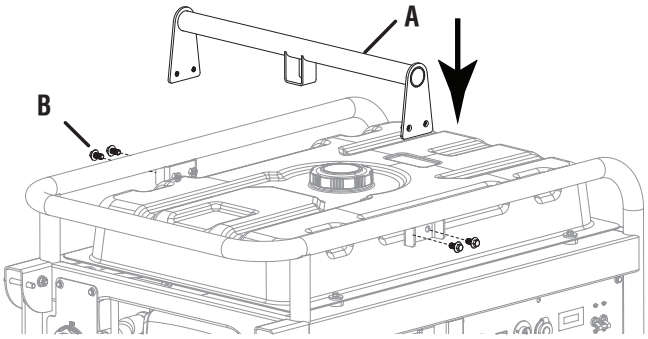

A - Lifting Bracket
B - Bolts

FIG. 10

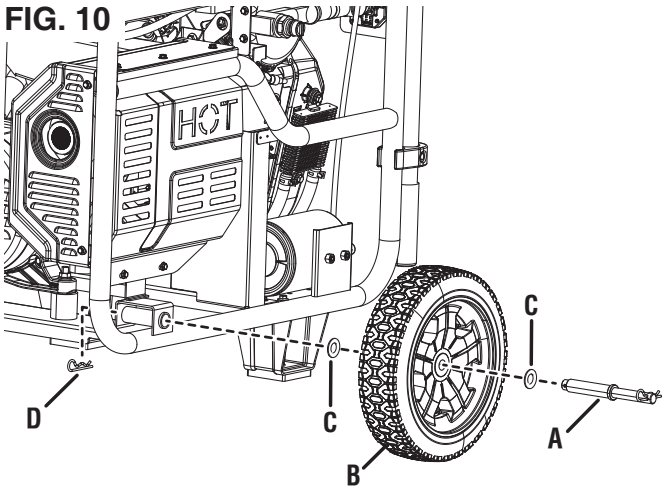

A - Axle
B - Wheel
C - Washer
D - Hitch pin

- Connect the negative (–) cable (black boot) to the negative (–) battery post. Secure the boot over the battery post.

NOTE: The generator is equipped with a battery charging feature. Once the engine is running, a small charge will slowly recharge the battery.

RAISING/LOWERING THE HANDLE

See Figure 12.

- Stand in front of the unit, grasp the handle firmly and lift it to the raised position.
- With the handle in the raised position, the generator can safely be rolled from one position to another. For information regarding transporting the unit in a vehicle, refer to the **Transporting** section in *Operation*.
- To lower the handle, gently guide the handle to the down position.

⚠ CAUTION Pinch point hazard. Do not place any body parts between the handle and the frame.

⚠ WARNING Do not alter or modify this product unless instructed to so in this manual or by the manufacturer. Do not use attachments or accessories that are not recommended for use with this product. Making unauthorized modifications and using incompatible accessories can damage the unit and void the warranty.

OVERVIEW

This portable generator can provide power to a wide range of items including household appliances, job-site tools, camping equipment, tailgating essentials, and much more.

NOTICE Do not attempt to crank or start engine before it has been properly serviced with recommended oil. Failure to add engine oil before starting will result in serious engine damage that is not covered under warranty.

FIG. 11

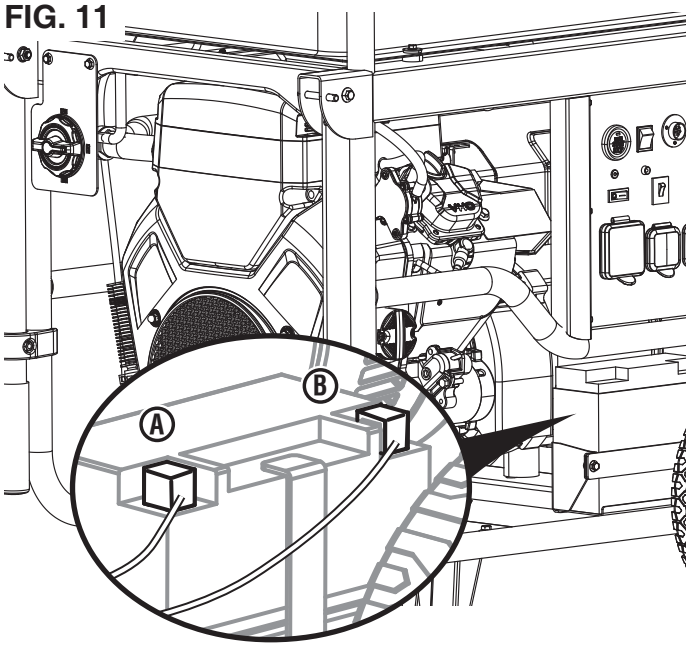

A - Positive + (red)
B - Negative – (black)

FIG. 12

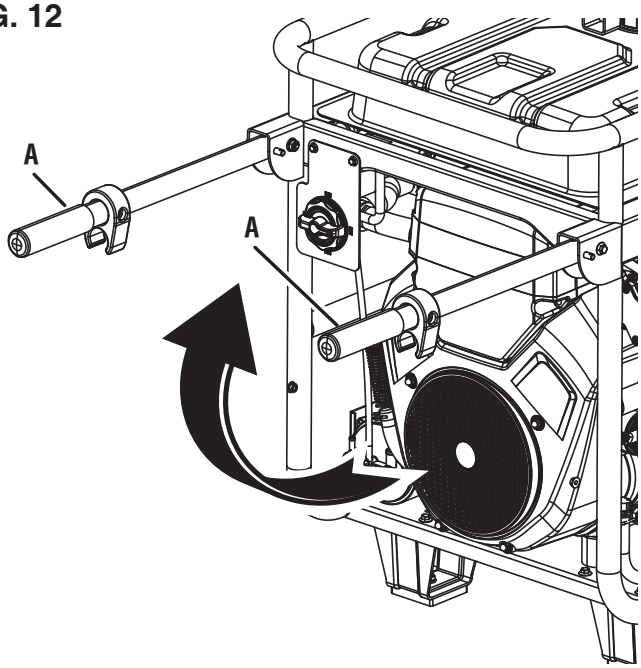

A - Handle

⚠ DANGER Generator exhaust contains high levels of carbon monoxide (CO), an invisible, odorless, and extremely poisonous gas. If you smell exhaust fumes, you are breathing carbon monoxide. But, even if you do not smell exhaust fumes you may be inhaling CO.

ONLY operate generators outside, in a well-ventilated area. NEVER operate generators indoors, doing so CAN KILL YOU IN MINUTES.

- **Correct Use –** Only use generators outside and downwind, far away from windows, doors and vents. Always direct exhaust away from occupied spaces. Always install battery-powered carbon monoxide detectors or plug-in carbon monoxide detectors with battery back-up in living areas. *See Figure 1.*
- **Incorrect Use –** NEVER use a generator in a home, garage, basement, attic, crawl space or any other fully or partially enclosed area. Areas such as these can allow dangerous levels of carbon monoxide to accumulate. An open door or a running fan WILL NOT provide adequate ventilation. *See Figure 2.*

If feeling dizzy, weak, or sick while using the generator, move to fresh air immediately. Contact a doctor. This may be carbon monoxide poisoning.

⚠ WARNING Do not alter or modify this product unless instructed to so in this manual or by the manufacturer. Do not use attachments or accessories that are not recommended for use with this product. Making unauthorized modifications and using incompatible accessories can damage the unit and may void the warranty.

NOTICE In certain circumstances, the National Electric Code may require the generator to be grounded to an approved earth. Consult with a qualified electrician to determine grounding requirements before operation.

⚠ WARNING Avoid skin contact with engine oil or gasoline. Wear protective clothing and equipment. Wash all exposed skin with soap and water. Prolonged skin contact with gasoline or engine oil may cause severe skin irritation and other adverse reactions.

NOTICE Inspect the physical condition of the product prior to each use. Look for loose bolts, fluid leaks, and other signs of wear. Replace all damaged items.

NOTICE Be sure the wheels and stabilizers are properly installed before adding fuel or oil.

KNOW HOW TO SAFELY LOCATE AND OPERATE THE GENERATOR

⚠ DANGER Asphyxiation hazard. Place the generator in a well-ventilated area. DO NOT place the generator near vents or intakes where exhaust fumes could be drawn into occupied or confined spaces. Carefully consider wind and air currents when positioning the generator.

⚠ WARNING Electrocution hazard. Never use the generator in a location that is wet or damp. Never expose the generator to rain, snow, water spray, or standing water while in use. Protect the generator from all hazardous weather conditions. Moisture or ice can cause a short circuit or other malfunction in the electrical circuit. Using a generator or electrical appliance in wet conditions, such as rain or snow, or near a pool or sprinkler system, or with wet hands, could result in electrocution.

⚠ WARNING Fire hazard. Only operate the generator on a solid, level surface. Operating the generator on a surface with loose material such as sand or grass clippings can cause debris to be ingested by the generator that could block cooling vents or the air intake system. Allow the generator to cool for 30 minutes before transport or storage.

- Read and understand all safety information before starting the generator (see pages 4–12).
- NEVER use a generator in a home, garage, basement, attic, crawl space or any other fully or partially enclosed area. Areas such as these can allow dangerous levels of carbon monoxide to accumulate. Carbon monoxide (CO), an invisible, odorless, and extremely poisonous gas CAN KILL YOU IN MINUTES.
- DO NOT operate the generator in the back of a SUV, camper, trailer, truck bed (regular, flat, or otherwise), under stairs, next to walls or buildings, or in any other location that will not allow for adequate cooling of the generator and/or the muffler. Operating the generator in enclosed or partially enclosed areas will allow dangerous levels of CO to accumulate.
- DO NOT contain generators during operation.
- Only use OUTSIDE and far away from windows, doors, and vents as recommended by the US Department of Health and Human Services Centers for Disease Control and Prevention. Specific homes and/or wind conditions may require additional distance.
- Do not operate the generator on an incline. The unit should always be placed on a flat stable surface.
- The generator should be on a flat, level surface at all times (even while not in operation).
- The generator must have at least 5 ft. (1.5 m) of clearance from all combustible material.

KNOW THE REGULATIONS FOR THE USE OF PORTABLE GENERATORS

Consider where and how the generator will be used, and become familiar with any local, state, or federal ordinances concerning the

intended use. It may be necessary to contact a qualified electrician or local governing agency for a full list of requirements.

ADDING OIL/CHECKING OIL LEVEL

See Figure 13.

NOTICE Do not attempt to crank or start engine before it has been properly serviced with recommended oil. Failure to add engine oil before starting will result in serious engine damage that is not covered under warranty.

NOTICE Use of 2-stroke/cycle oil or other unapproved oil types can cause severe engine damage that is not covered under warranty.

The included a 1.6L (54.1 fl oz) oil bottle,recommended oil type for typical use is 10W-30 engine oil. If running the generator in extreme temperatures, refer to the following chart.

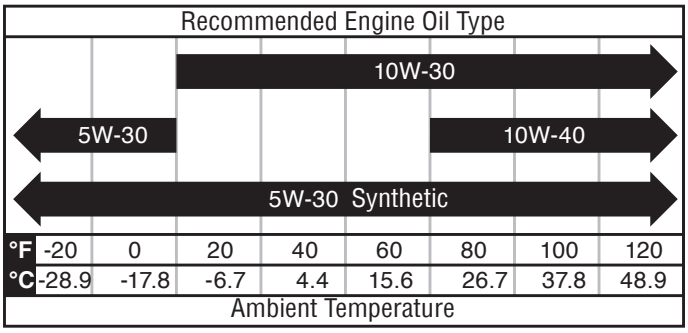

NOTE: Inspect the engine oil level before each use or every 8 hours of operation.

- Turn the generator off and allow the engine to cool for at least five minutes.
- Place the generator on a level surface in a well-ventilated area.
- Clean the area around the oil dipstick.

For initial oil ill:

- Slowly unscrew and remove the oil dipstick.
- Using the funnel, slowly pour the supplied engine oil into the oil fill hole. Stop frequently, so not to overfill.

NOTE: The generator was functionally tested in the factory and may contain minimum residual oil. Additional oil is required to operate the unit. **Do not** overfill.

- Replace and tighten the oil dipstick.

To check oil level:

- Slowly unscrew and remove the oil dipstick.
- Clean the dipstick and re-seat it inside the oil fill hole. Do not thread the dipstick.
- Remove the dipstick and confirm that the oil level is within safe operating range.
- If the oil level is low, add recommended engine oil incrementally and recheck until the level is within the safe operating range.
- Replace the oil dipstick and push until it is seated.

FIG. 13

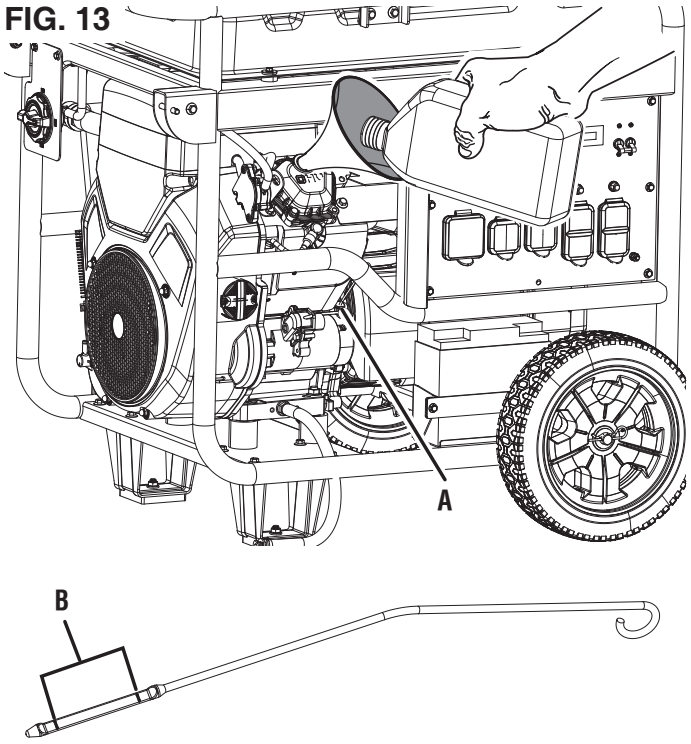

A - Oil Dipstick
B - Safe Operating Range

GASOLINE REQUIREMENTS

NOTICE **Do not use E15 or E85 fuel in this product.** Engine or equipment damage caused by stale fuel or the use of unapproved fuels (such as E15 or E85 ethanol blends) is not covered by warranty. Only use gasoline containing up to 10% ethanol.

- ALWAYS use CLEAN, FRESH, gasoline (87 octane) in this unit. NEVER use OLD, STALE, or CONTAMINATED gasoline.
- Up to 10% ethanol (gasohol) is acceptable (where available; non-ethanol fuel is recommended).
- DO NOT use E85 or E15.
- DO NOT use a gas oil mix.
- DO NOT modify the engine to run on alternate fuels.



USING FUEL STABILIZER

Adding a fuel stabilizer (not included) extends the usable life of fuel and helps prevent deposits from forming that can clog the fuel system. Follow the manufacturer's instructions for use.

Always mix the correct amount of fuel stabilizer to gasoline in an approved gasoline container before fueling the generator. Run the generator for five minutes to allow the stabilizer to treat the entire fuel system.

ADDING GASOLINE

See Figures 14 - 15.

⚠ DANGER Fire and explosion hazard. Never remove the fuel cap or refuel the generator while the engine is running. Do not smoke or create sparks while fueling. Always turn the engine off and allow the generator to cool for at least five minutes before refueling.

⚠ DANGER Fire and explosion hazard. Do not overfill fuel tank. Fill only to the red maximum fill ring on the fuel screen. Overfilling may cause fuel to spill onto engine causing a fire or explosion hazard.

⚠ WARNING Never use a gasoline container, gasoline tank, or any other fuel item that is broken, cut, torn or damaged.

NOTICE Only fill the tank from an approved gasoline container. Be sure the gasoline container is internally clean and in good condition to prevent fuel system contamination.

- Turn the generator off and allow the engine to cool for at least five minutes.
- Place the generator on a level surface in a well-ventilated area. **DO NOT fuel indoors.**
- Clean the area around fuel cap and remove the cap slowly.
- Slowly add the recommended fuel. Do not overfill.
  NOTE: The gasoline level should NOT be higher than the red maximum fill ring on the fuel screen.
  NOTE: The fuel gauge on top of the tank shows the approximate fuel level.
- Install the fuel cap. Tighten securely.
- Immediately wipe up any spilled fuel with a dry cloth, then move the cloth at least 30 feet away. Wait for any gasoline fumes to dissipate before restarting the engine.

NOTICE Fuel can damage paint and plastic. Use caution when filling the fuel tank. Damage caused by spilled fuel is not covered under warranty.

NOTICE Clean the fuel screen filter of debris before and after each fueling. Remove the fuel screen filter by slightly compressing it while removing it from the fuel tank.

FIG. 14

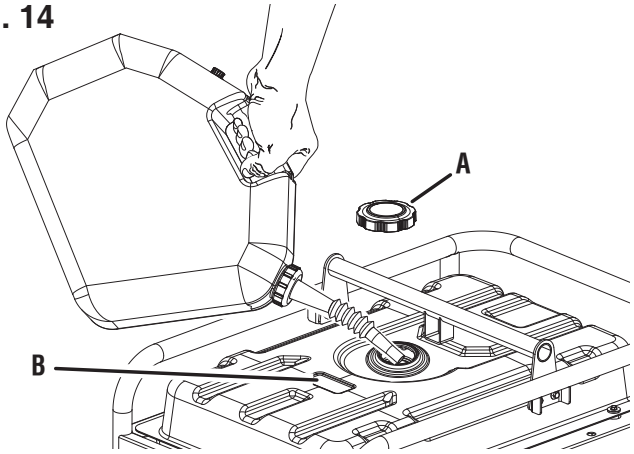

A - Fuel Cap
B - Fuel Gauge

FIG. 15

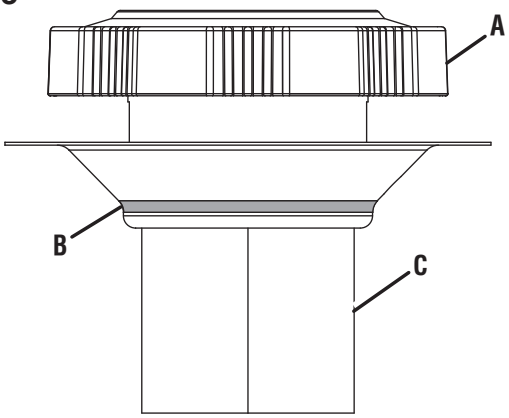

A - Fuel Cap
B - Max Fill Line
C - Screen Filter

LP GAS CYLINDER REQUIREMENTS

NOTICE Propane cylinders that use liquid withdrawal system can not be used on these models.

LP gas is extremely flammable and could ignite spontaneously when mixed with air. The LP gas cylinder used with this generator must meet the following requirements:

- The cylinder must be manufactured and labeled in accordance with the *Specifications for LP Gas Cylinders* of the U.S. Department of Transportation (D.O.T.) or the National Standard of Canada, CAN/CSA-B339, *Cylinders, Spheres, and Tubes for Transportation of Dangerous Goods; and Commission*.
- The cylinder must have a safety relief valve.

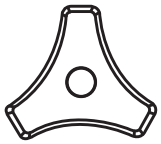

- The cylinder must include a UL listed Overfill Protection Device (OPD). Cylinders with this safety feature will have a unique triangular handwheel. Only use LP gas cylinders with this type of handwheel.
- The cylinder must be periodically certified for use by the authority having local jurisdiction (AHJ). Before use, confirm that the certification date on the cylinder has not expired.
- All new cylinders must be purged of air and moisture prior to filling. Used cylinders that have not been plugged or kept closed must also be purged. The purging process should be done by a propane supplier (Cylinders from an exchange supplier should have been purged and filled properly).

CONNECTING AN LP GAS CYLINDER TO THE GENERATOR

See Figures 16 - 18.

⚠ DANGER Fire and explosion hazard. Never connect or disconnect the LPG/propane hose while the engine is running. Do not smoke or create sparks while handling LPG/propane. Always turn the engine off and allow the generator to cool for at least five minutes before connecting the propane cylinder.

⚠ WARNING Never use a gas container, LPG/propane hose, propane cylinder or any other fuel item that appears to be damaged.

⚠ WARNING To reduce the risk of injury, perform a leak test any time the LP gas cylinder is reconnected.

- Turn the generator off and allow the engine to cool for at least five minutes.
- Place the generator on a level surface in a well-ventilated area. **DO NOT connect or disconnect the LP gas cylinder indoors.**
- Place the LP gas cylinder near the generator, but **do not place it in the path of the muffler exhaust**.
  NOTE: The propane cylinder can be of any capacity but it must conform to the **LP Gas Cylinder Requirements** listed earlier in this section.For best results, use an LP gas cylinder of at least 40 pounds capacity.
- Confirm that the handwheel is in its full off position.
- Hold the LPG/propane hose firmly and push the nipple into the cylinder valve.
- Use your hand to thread the LPG/propane hose to the cylinder valve. **Do not cross-thread. Do not use tools or sealants.**

  NOTE: There will be some resistance as the hose seals in the cylinder valve. To complete the connection, turn the connector an additional one-half to three-quarters of a turn. If unable to complete the connection, disconnect the hose and try again. If the connection still cannot be completed, DO NOT use this hose!

FIG. 16

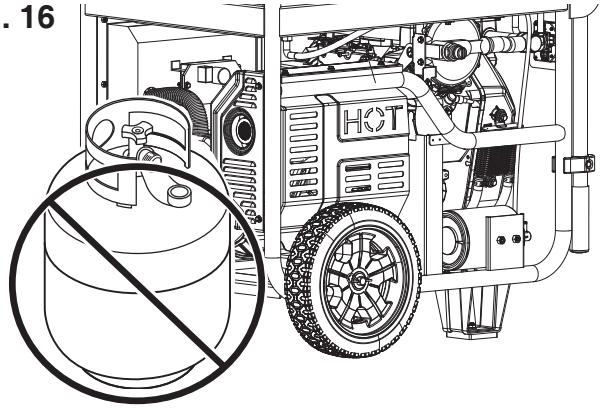

FIG. 17

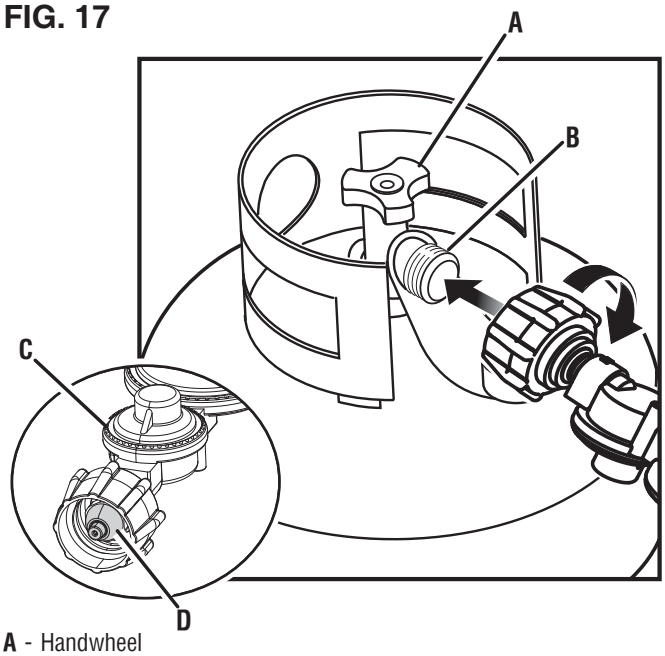

A - Handwheel
B - Cylinder Valve
C - LPG/Propane Hose
D - Nipple

- Use your hand to thread the LPG/propane hose to the propane inlet. **Do not cross-thread. Do not use tools or sealants.**

CONNECTING GENERATOR TO NATURAL GAS SUPPLY LINE

See Figures 18 - 19.

⚠ DANGER Fire and explosion hazard. Never connect or disconnect the natural gas hose while the engine is running. Do not smoke or create sparks while handling natural gas. Always turn the engine off and allow the generator to cool for at least five minutes before connecting to natural gas.

⚠ WARNING Never use a natural gas supply line, natural gas hose, or any other fuel item that appears to be damaged.

⚠ WARNING To reduce the risk of injury, perform a leak test any time the natural gas hose is disconnected and reconnected.

- Turn the generator off and allow the engine to cool for at least five minutes.
- Confirm that the gas is turned off at the natural gas supply line.
- Completely unwrap and straighten the natural gas hose to prevent kinks.
- The male quick-connect (included), or any threaded gas connection, MUST be installed by a licensed contractor!
- Attach the quick connect adapter to the generator and tighten securely.
- Connect the natural gas hose to the generator using the quick-connect collar.
  - Pull back the quick-connect collar.
  - Push the hose onto the natural gas/propane inlet.
  - Push the collar forward so that the hose is secured properly. Gently pull the hose to see that it is secure.

SELECTING THE FUEL SOURCE

See Figure 20.

⚠ DANGER Fire and explosion hazard. DO NOT add gasoline to the fuel tank or connect the LPG/propane hose or natural gas hose to the generator while the generator is in operation.

NOTICE Do not overload the generator. Load capacities differ depending on the fuel source. Before switching fuel sources, be sure the generator can supply enough running (continuous) and peak (starting) watts for the connected items.

The fuel source can be switched while the engine is off or while it is running if a propane tank or natural gas supply line is connected to the generator BEFORE operation. If switching from gasoline to another fuel source while the engine is running, it may run rough for a few seconds as it purges gasoline from the carburetor.

To switch to gasoline:

- Turn the fuel valve to the open position to start the flow of gasoline.
- Rotate the fuel selector switch to **GAS**.
- Turn off the flow of natural or propane gas.

To switch to propane:

- Open the cylinder valve on the LP gas cylinder to start the flow of propane.
- Rotate the fuel selector switch to **LPG**.
- Turn off the flow of natural gas and gasoline.

FIG. 18

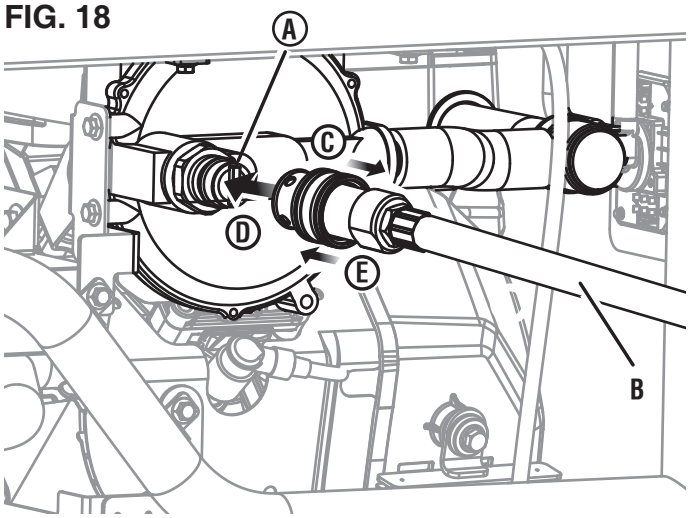

A - Natural Gas/Propane Inlet
B - Natural Gas Hose (not included)
C - Pull Collar Back
D - Push Hose Onto Inlet
E - Push Collar Forward

FIG. 19

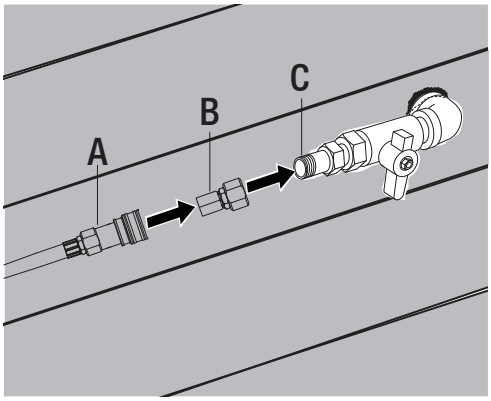

A - Natural Gas Hose
B - Natural Gas adapter
C - Natural Gas Supply Line

FIG. 20

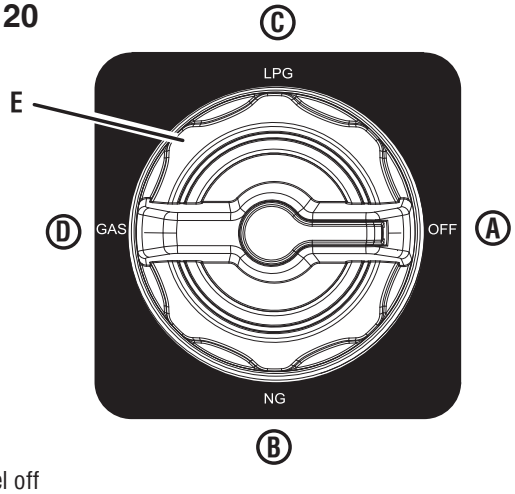

A - Fuel off
B - Natural gas
C - Propane
D - Gasoline
E - Fuel selector switch

To switch to natural gas:

- Open the valve on the natural gas supply line to start the flow of natural gas.
- Rotate the fuel selector switch to **NG**.
- Turn off the flow of propane and gasoline.

HIGH ALTITUDE OPERATION

Engine power is reduced the higher it is operated above sea level. Output will be reduced approximately 3.5% for every 1000 feet of increased altitude from sea level.

High altitude adjustment is required for operation at altitudes over 5,000 ft. (1524 m). Operation without this adjustment will cause decreased performance, increased fuel consumption, and increased emissions.

NOTICE DO NOT operate the generator at altitudes below 2,000 ft. (762 m) with the high altitude kit installed. Engine damage may occur.

High Altitude Carburetor Kit	Part# 518563

DATA CENTER

See Figure 21.

Push the mode button to cycle through the data display modes.

Voltage: Displays current voltage output.

Frequency (Hz): Displays power output frequency in Hertz.

Lifetime Hours: Displays the lifetime run hours.

Run Time/Maintenance: Displays current run time. Resets to zero when shut down. Maintenance reminder displayed when required.

Maintenance Codes:

P25 – Change engine oil

P50 – Clean air filter, Change engine oil

P100 – Change engine oil, clean air filter, replace fuel filter

PAIRING THE KEY FOB

See Figures 22 - 23.

- Bring the key fob in range of the generator.
- Ensure the battery is connected and the fuel selector switch is in the **FUEL OFF** position.
- Push the battery switch to the ON position.

  NOTE: When battery power is available, the battery indicator light will illuminate and the LED around the engine start/stop button will illuminate solid green.
- Press and hold the engine start/stop button for 10 seconds until the LED around the button flashes green, then release it.
- Press and hold the start button on the key fob for one second, then release it.

  • If the key fob paired successfully, the LED around the engine start/stop button will turn solid green.

  • If pairing was unsuccessful, the LED around the engine start/stop button will continue flashing green. Wait several seconds, then make a second attempt. If the second attempt fails, turn the battery switch to the OFF position, wait several seconds and repeat the process. If subsequent attempts fail, turn the battery switch to the OFF position and contact customer service.
- After the key fob is successfully paired to the generator, turn the battery switch to the OFF position.

FIG. 21

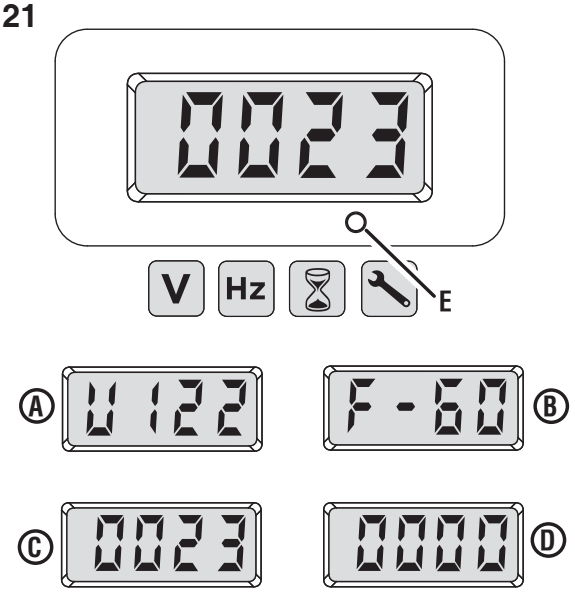

A - Voltage
B - Frequency
C - Lifetime Hours
D - Run Time/Maintenance Reminder
E - Mode Button

BREAK-IN PERIOD

For proper break-in, do not exceed 50% of the rated running watts during the first five hours of operation.

Use supplied oil until first recommend oil change. Do not use full synthetic oil during break in period. Full synthetic oil may prevent proper break in and seating of the piston rings.

Vary the load occasionally to allow stator windings to heat and cool and help seat the piston rings.

⚠ DANGER Fire and explosion hazard. DO NOT move or tip the generator during operation.

OPERATION

STARTING THE GENERATOR

See Figures 23 - 25.

Allow the engine to stabilize before connecting loads to the control panel receptacles.

- Place the generator in a safe, appropriate location.
- Unplug all loads.
- Inspect oil and fuel levels. If needed add oil, refill the LP gas cylinder, add gasoline, or contact the natural gas utility company.
- Using the fuel selector switch, select **GAS** (gasoline), **LPG** (propane), or **NG** (natural gas).
  - For gasoline, place the fuel selector switch in the **GAS** position.
  - For propane, open the cylinder valve on the LP gas cylinder and place the fuel selector switch in the **LPG** position.
  - For natural gas, open the valve on the natural gas supply line and place the fuel selector switch in the **NG** position.
- Place the battery switch in the on **(I)** position.

  NOTE: When battery power is available, the battery indicator light and the green LED around the engine start/stop button will illuminate.

To start the generator using the remote start feature:

- Push and hold the start button on the key fob for two seconds. **NOTE:** The red LED on the key fob should blink each time the start button is pressed. If the red LED does not blink and the generator does not start, then the battery in the fob may need to be replaced. If the red LED does blink but the generator does not start, the battery may need to charge. Use the charger (included) to charge the battery.

To start the generator using the engine start/stop button:

- Push and hold the engine **START/STOP** button for two seconds.

  NOTE: If the engine **START/STOP** button does not start the generator, the battery may need to charge. The battery will charge as the unit runs.

To add loads after starting the generator:

- When the generator output stabilizes, safely connect loads to the control panel receptacles.

  NOTE: Confirm that all devices are turned off before connecting them to the generator.

  NOTE: Be sure that the wattage requirements for all connected devices are compatible with the capability of the generator.
- Connect and start the largest device or appliance.
- Allow the generator output to stabilize. Once stable, the engine should run smoothly, and the device should function properly.
- Connect and start the next largest device or appliance.
- Allow the generator output to stabilize.
- Repeat this process for each additional load.

FIG. 22

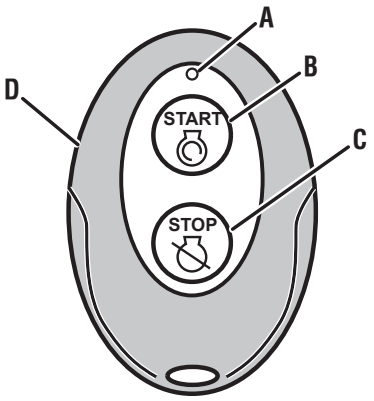

A - Red LED
B - Start Button
C - Stop Button
D - Key Fob

FIG. 23

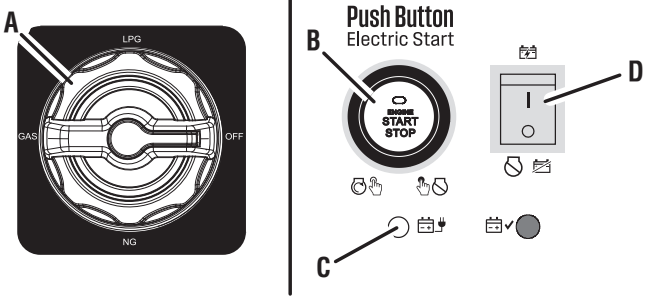

A - Fuel Selector Switch
B - Engine Start/Stop Button
C - Battery Indicator
D - Battery Switch

STOPPING THE GENERATOR

See Figures 23 and 26.

- Remove any connected loads from the control panel receptacles.
- Allow the generator to run at “no load” to reduce and stabilize engine and alternator temperatures.
- Press and hold the engine START/STOP button or the stop button on the key fob for one second to stop the generator.
- Turn the battery switch off.
- Turn the fuel selector switch to the **FUEL OFF** position.
- Stop the flow of fuel.
  - For gasoline, close the fuel valve.
  - For propane, close the cylinder valve on the LP gas cylinder.
  - For natural gas, close the valve on the natural gas supply line.
- Disconnect the propane hose from the LP gas cylinder and the generator or disconnect the natural gas hose from the natural gas supply line and the generator.

To stop the unit quickly in an emergency:

- Press and hold the engine START/STOP button or the stop button on the key fob for one second to stop the generator.

AC LUG CONNECTION

⚠ WARNING TO PREVENT DEATH FROM ELECTROCUTION: AC wiring must only be done by a qualified electrician.

⚠ WARNING TO PREVENT DEATH FROM ELECTROCUTION: NEVER connect wires to the AC connector while the generator is operating.

FIG. 24

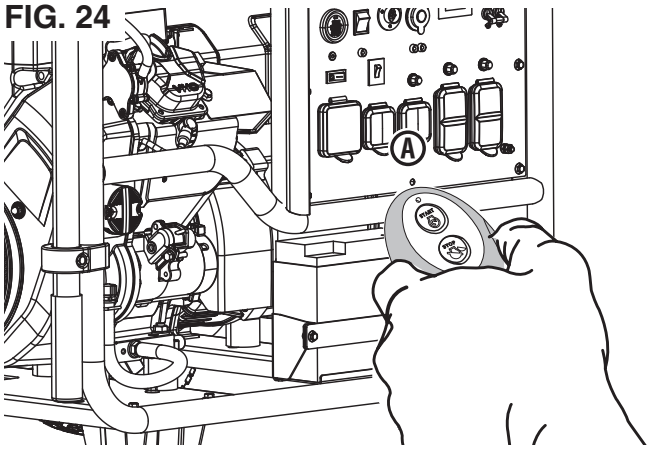

A - Key fob

FIG. 25

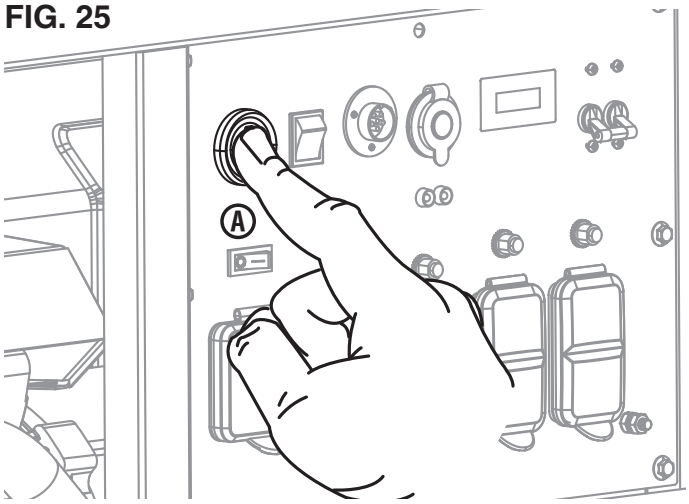

A - Engine start/stop button

OPERATION

CIRCUIT BREAKERS

See Figure 26.

The 20 amp circuit breaker protects devices and equipment connected to the 120V, 20 amp receptacles from electrical overload. The 30 amp circuit breaker protects devices and equipment connected to the 120V, 30 amp receptacles. The main circuit breaker will automatically switch OFF if the combined load of the receptacles exceeds the capacity. If a circuit breaker activates, turn off the connected device, remove it from the port or outlet, and reset the circuit breaker.

USB POWER PORTS

See Figure 26.

Use the USB power ports and USB cables (not included) to charge USB-compatible devices such as phones, tablets, and speakers (up to 2.1 Amps).

NOTE: The USB power ports are designed for charging only and do not have data transfer or communication capabilities.

TRANSPORTING

- Turn off the generator.
- Allow the generator to cool a minimum of 30 minutes before transporting.
- Replace all protective covers on the generator control panel.
- Always use the frame, not the handle, to lift the unit or attach any load restraints such as ropes or tie-down straps. DO NOT attempt to lift or secure the generator by holding onto any of its other components.
- Keep the unit level during transport to minimize the possibility of fuel leakage or, preferably, drain the fuel or run the engine until the fuel tank is empty before transport.

⚠ CAUTION Fire hazard. DO NOT up-end the generator or place it on its side. Fuel or oil can leak and damage to the generator may occur.

LIFTING HOOK

See Figure 27.

Only use the lifting hook to lift the unit or attach any load restraints such as ropes or tie-down straps. **DO NOT** attempt to lift or secure the generator by holding onto any of its other components.

Before lifting the generator, inspect the bracket and be sure it is securely fastened to the generator. **DO NOT** lift the generator unless the lifting bracket is securely fastened.

- Hook a chain or strap through the eye on the lifting hook and be sure it is securely fastened.
- Connect a suitable lifting device to the chain or strap. Inspect chain and hook for any damaged links or any defects that could cause failure. It is recommended to use hooks with safety latches installed.
- Lift the generator slightly to ensure it is lifting straight and level.

FIG. 26

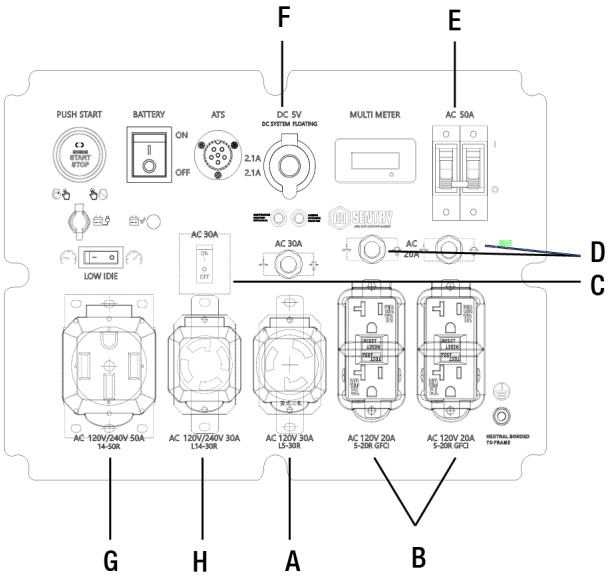

A - 120 Volt AC 30 Amp Receptacle
B - 120 Volt AC 20 Amp GFCI Receptacles
C - 30 Amp Circuit Breaker
D - 20 Amp Circuit Breakers
E - Main Circuit Breaker
F - USB Ports
G - 120/240 Volt AC 50 Amp Receptacle
H - 120/240 Volt AC 30 Amp Receptacle

⚠ WARNING Accidental start-up. Disconnect the spark plug boot (see figure 30) from the spark plug when performing maintenance on the generator.

⚠ WARNING Replace damaged or worn items with recommended or equivalent replacement parts. Using an incorrect or incompatible part might create a hazard that could result in serious personal injury.

⚠ WARNING Allow hot components to cool for 30 minutes before performing any maintenance procedure.

⚠ WARNING Avoid skin contact with engine oil or gasoline. Wear protective clothing and equipment. Wash all exposed skin with soap and water. Prolonged skin contact with gasoline or engine oil may cause severe skin irritation and other adverse reactions.

NOTICE Inspect the physical condition of the product prior to each use. Look for loose bolts, fluid leaks, and other signs of wear. Replace all damaged items. For replacement parts or assistance, contact our customer service team.

To prolong the life of this product, follow the maintenance instructions in this section. Contact customer service before servicing any recall or warranty parts.

CLEANING THE GENERATOR

Do not store or operate the generator in dirty, dusty, or corrosive environments. Do not allow foreign materials and debris to clog the vents on the unit.

NEVER clean the generator with a garden hose. Water can damage the fuel system and electrical components. If the unit needs to be cleaned, use a soft brush and damp cloth to clean the exterior and use low pressure air (no greater than 25 psi) to clean the vents.

Never use gasoline as a cleaning agent.

FIG. 27

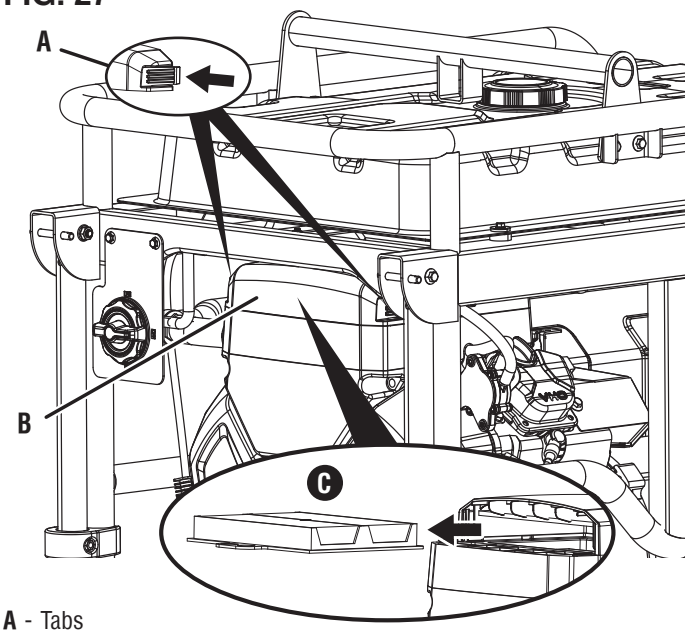

A - Tabs
B - Air filter cover
C - Air filter

CLEANING/REPLACING THE AIR FILTER

See Figure 27.

Keep air filter clean. A dirty air filter can cause poor performance and decrease the service life of the product. **NEVER operate the generator without an air filter in place.**

- Turn the generator off and allow the engine to cool for 30 minutes.
- Squeeze the tabs on both ends and pull to remove the air filter cover.
- Remove the air filter by pulling straight out and clean with compressed air. **Replace the air filter if damaged.**

  NOTE: DO NOT submerge the filter in liquids or add oil.
- Install the air filter into the air cleaner housing. Be sure it is correctly oriented and seated.
- Reinstall the air filter cover and be sure to secure the tabs.

CHANGING THE ENGINE OIL

See Figures 28 - 29.

For optimal performance, change the engine oil according to the figures specified in the **Maintenance schedule** or the engine manual (if applicable). When using the generator under extreme, dirty, dusty conditions or in extremely hot weather, change the oil more frequently.

NOTE: Change the oil while the engine is warm but not hot. Warm engine oil drains more quickly and thoroughly. Contact with hot engine oil will cause serious burns.

- Turn the generator off and allow the engine to cool for 30 minutes.
- Place the generator on a level surface in a well-ventilated area.

To change the engine oil:

- Clean the area around the oil fill cap. Remove the cap and set aside.
- Remove the oil dipstick and wipe clean.
- Place an oil pan (or suitable container) under the oil drain hose.
- Remove the drain hose from the clip and twist the cap counter-clockwise to open and allow the oil to drain into the pan.
- After the oil has drained completely, twist the cap clockwise to close. Return the drain hose into its clip.
- Wipe up any spilled oil.

To change the oil ilter:

- Place an oil pan under the oil filter.
- Remove the oil filter by rotating it counterclockwise. Allow the oil to drain completely. Clean the gasket mating surfac where the oil filter contacts the engine.
- Apply clean oil to the rubber seal on the new oil filter.
- Install the filter by hand. Be careful not to cross-thread. Turn clockwise until the seal contacts the engine and turn another 3/4 turn. DO NOT over tighten.
- Refill the oil as described in the *Operations* section.

CLEANING/REPLACING THE SPARK PLUG

See Figure 30.

NOTICE **ALWAYS** use compatible non-resistor-type spark plug. Use of resistor-type spark plug can result in rough idling, misfire, or may prevent the engine from starting.

Be sure the sparkplug is clean and properly gapped. To clean or replace the spark plug:

FIG. 28

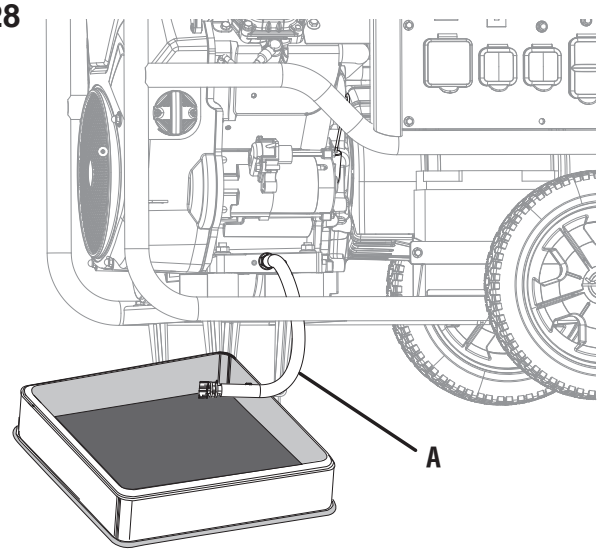

A - Oil drain hose

FIG. 29

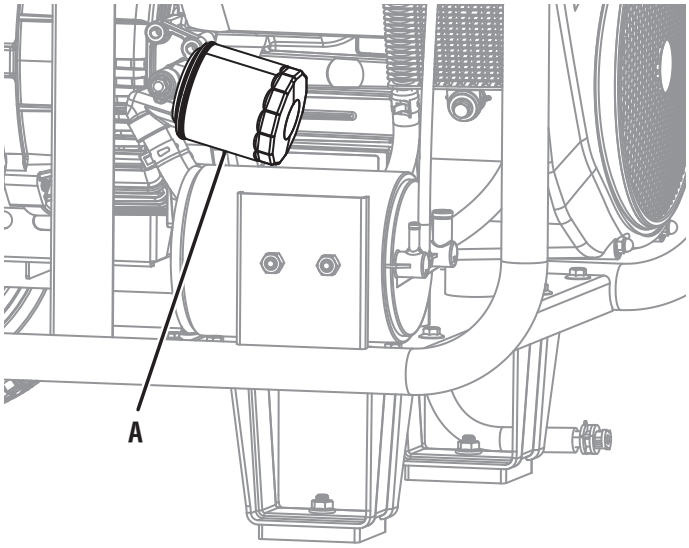

A - Oil filter

- Turn the generator off and allow the engine to cool for 30 minutes.
- Place the generator on a level surface in a well-ventilated area.
- Remove the spark plug boot by firmly pulling the spark boot directly away from the engine.
- Clean the area around the spark plug.
- Remove the spark plug with the included spark plug socket wrench.

  NOTICE Never apply any side load or move the spark plug laterally when removing the spark plug.

- Inspect the spark plug. Replace if electrodes are pitted, burned, or the insulator is cracked. Only use a recommended replacement plug.
- Measure the spark plug electrode gap with a wire-type feeler gauge. If necessary, correct the gap by carefully bending the side electrode.

  Spark plug gap: 0.024 – 0.032 in. (0.6 – 0.8 mm)
- Carefully install the spark plugs finger tight, then tighten as additional 3/8 to 1/2 turn with the spark plug wrench.
- Install the spark plug boots.

CLEANING THE SPARK ARRESTOR

See Figure 31.

Check and clean the spark arrestor according to the figures specified in the **Maintenance schedule** or the engine manual (if applicable). Failure to clean the spark arrestor will result in degraded engine performance.

- Turn the generator off and allow the engine to cool for 30 minutes.
- Place the generator on a level surface in a well-ventilated area.
- Remove the two screws securing the spark arrestor bracket.
- Remove the bracket, screen, and spark arrestor from the generator.
- Gently clean the screen and spark arrestor using a wire brush.
- Reinstall the spark arrestor, screen, and bracket. Tighten screws securely.

REPLACING THE FUEL FILTER

See Figure 32.

The fuel filter should be replaced after 100 hours of use.

NOTE: Have an appropriate gasoline container and absorbent towels ready to catch residual fuel in the filter and fuel line.

- Allow the generator to cool completely.
- Turn the fuel selector switch to the OFF position.
- Note the orientation of the fuel filter for the direction of the fuel flow.
- Using pliers, remove the fuel line clamps and remove the used filter.
- Install the new filter. Check the orientation for the flow of the fuel.

  NOTE: If the filter is not in the correct orientation, the fuel will not flow. If the fuel flow stops, check that the filter is in the correct position for operation.

FIG. 30

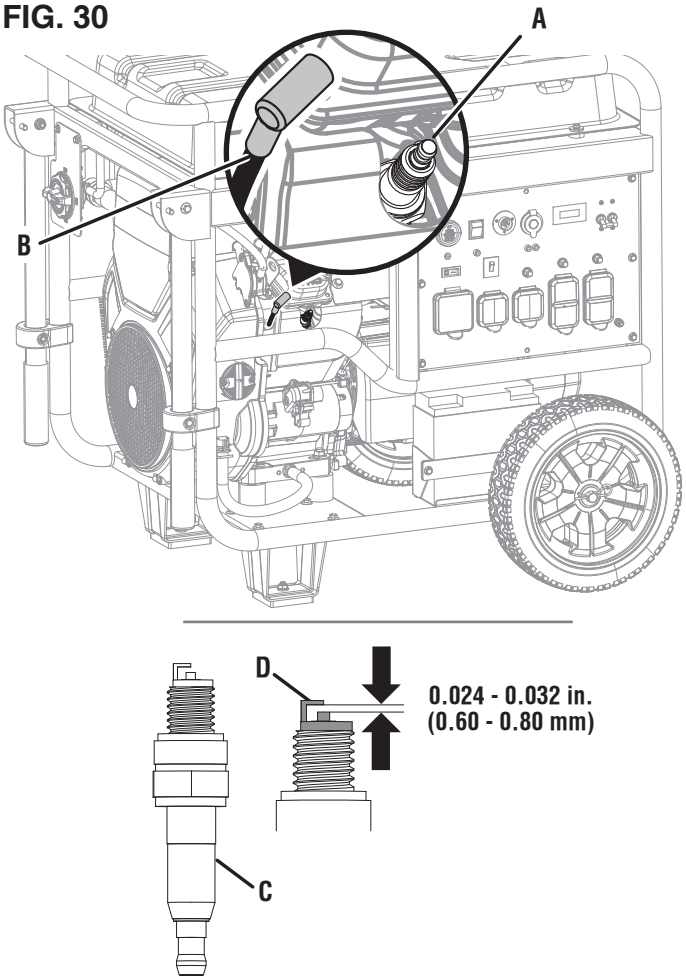

A - Spark plug
B - Spark plug boot
C - Insulator
D - Electrode

FIG. 31

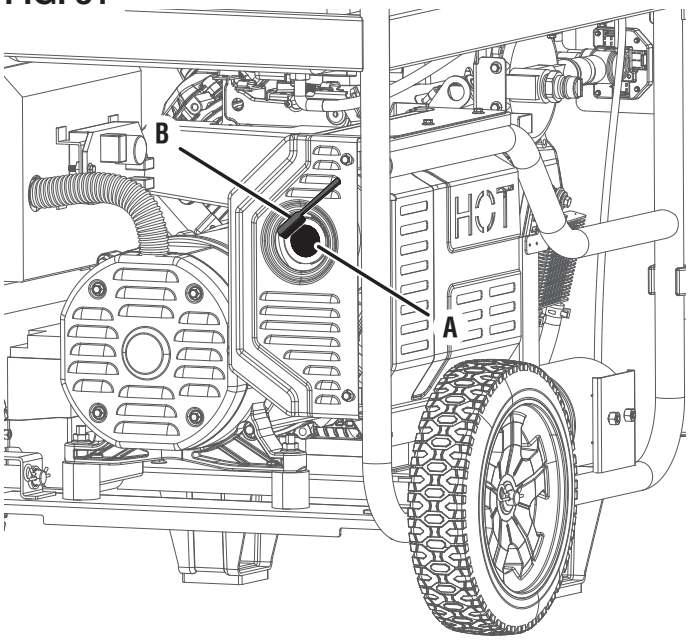

A - Spark arrestor screen
B - Wire brush

- Place the fuel lines over the nipples of the new filter. Be sure the clamps are in the correct position to prevent leakage.

DRAINING THE FUEL TANK AND CARBURETOR FLOAT BOWL

See Figure 33.

> ⚠ WARNING **ALWAYS** store gasoline in a container approved for gasoline. Unapproved containers can break or deteriorate allowing gasoline or gasoline vapors to escape which can create a serious hazard.

Even properly stabilized fuel can leave residue and cause corrosion if left long term. If storing the generator for two to six months, drain the float bowl to prevent gum and varnish buildup in the carburetor. If storing the generator for longer than six months, drain the fuel tank to prevent fuel separation, deterioration, and deposits in the fuel system.

- Turn the generator off and allow the engine to cool for 30 minutes.
- Place the generator on a level surface in a well-ventilated area.
- Disconnect the propane hose from the LP gas cylinder and the generator or disconnect the natural gas hose from the natural gas supply line and the generator.

To drain the float bowl:

- Turn the fuel selector switch to the **FUEL OFF** position.
- Place a drain hose (not included) on the bottom of the carburetor float bowl as shown.
- Place the bottom end of the drain hose (not included) into an approved gasoline container to catch the drained fuel.
- Loosen the float bowl drain screw and allow the fuel to drain. Tighten the float bowl drain screw.
- Remove the drain hose (not included).

To run the float bowl dry:

- Turn the fuel selector switch to **GASOLINE** and start the generator as described earlier.
- After the engine starts, move the fuel selector switch to the **OFF** position.
- Allow the generator to run until the fuel in the carburetor is depleted and the engine stops.

To drain the fuel tank:

> NOTICE To prevent damage to the unit, drain the engine oil before emptying the fuel tank. See **Changing the engine oil** for details.

- Turn the fuel selector switch to the **OFF** position and open the fuel valve.
- Clean area around fuel cap and remove the cap slowly.
- Remove the fuel screen filter by slightly compressing it while removing it from the tank.
- Using a commercially available gasoline hand pump (not included), siphon the gasoline from the fuel tank into an approved gasoline container. **DO NOT** use an electric pump.

FIG. 32

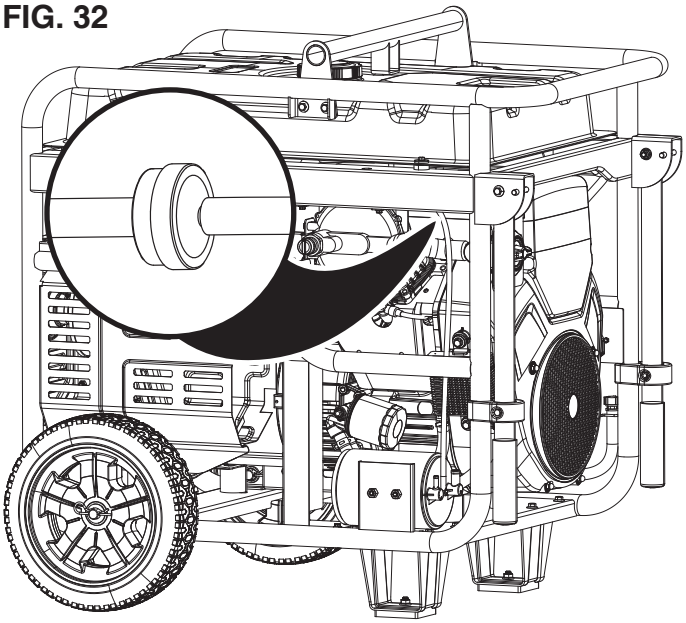

A - Fuel filter

FIG. 33

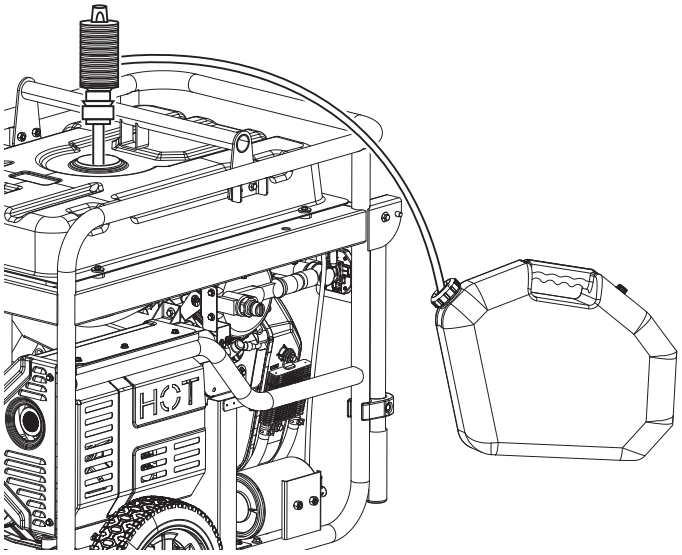

NOTE: The fuel tank can also be drained using the carburetor drain screw and drain hose as described earlier. Turn the fuel selector switch to **GASOLINE** and open the fuel valve to allow fuel to flow from the tank through the carburetor.

INSPECTING AND ADJUSTING THE VALVE CLEARANCE

See Figures 34 - 35.

> NOTICE Inspecting and adjusting valve clearance must be done when the engine is cold.

- Turn the generator off and allow the engine to cool for 30 minutes.
- Place the generator on a level surface in a well-ventilated area.

- Remove the valve cover and carefully remove the gasket. If the gasket is torn or damaged, it must be replaced.
- Remove the spark plug so the engine can be rotated more easily.
- Looking through the spark plug hole; the piston should be at the top (both valves are closed).
- Both rocker arms should be loose at TDC on the compression stroke. If they are not, rotate the engine 360°.
- Insert a feeler gauge between the rocker arm and the valve stem to measure valve clearance.

	Intake Valve	Exhaust Valve
Valve Clearance	0.0031 – 0.0047 in (0.08 – 0.12 mm)	0.0051 – 0.0067 in (0.13 – 0.17 mm)
Torque	8–12 Nm	8–12 Nm

- If an adjustment is necessary, hold the rocker arm pivot and loosen the pivot adjusting nut.
- Slide the appropriate feeler gauge between the rocker arm and the valve stem.
- Turn the rocker arm pivot to obtain the specified clearance. Hold the rocker arm pivot and re-tighten the pivot adjusting nut to the specified torque.

  Torque: 106 inch-pound (12 Nm)
- Recheck valve clearance.
- If no further adjustments are needed, perform this procedure on the other valve.
- When finished, install the gasket, valve cover, and spark plug.
- Repeat steps for the other cylinder.

BATTERY MAINTENANCE

See Figure 36.

⚠ WARNING The battery gives off explosive hydrogen gas during normal operation. A spark or flame can cause the battery to explode with enough force to kill or cause serious injury. Wear protective clothing and a face shield, or have a skilled technician perform battery maintenance.

⚠ WARNING Burn hazard. The battery contains sulfuric acid (electrolyte) which is highly corrosive and poisonous. Wear protective clothing and eye protection when working near the battery. Keep children away from the battery.

FIG. 34

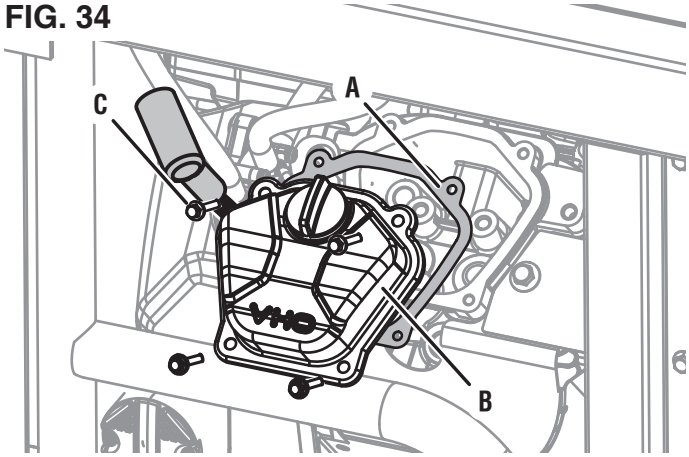

A - Gasket
B - Valve cover
C - Bolt

FIG. 35

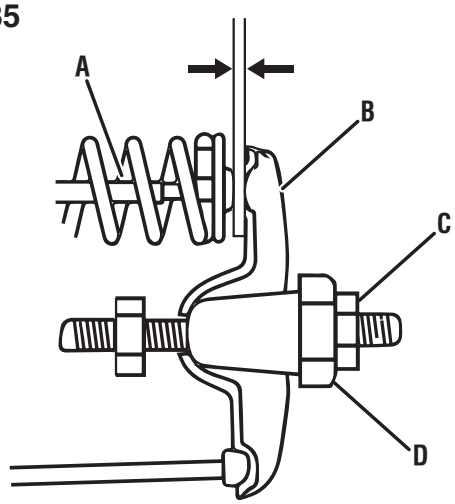

A - Valve stem
B - Rocker arm
C - Pivot adjusting nut
D - Rocker arm pivot

⚠ WARNING NEVER smoke or work near sparks or other sources of ignition. NEVER touch both battery terminals at the same time with any body part or any non-insulated tools. If battery acid contacts skin or clothing, flush immediately with water and neutralize with baking soda.

The battery shipped with the generator has been fully charged. A battery may lose some charge when not in use for prolonged periods of time.

NOTE: Once started, the generator will charge the battery after 30–60 minutes of use.

When the generator is not running, the included trickle charger can remain connected and will maintain the battery for an indefinite period of time. A red light on the charger indicates charging in progress. A green light indicates charging complete. Charge in a dry location.

- Plug the charger into the battery charging port on the control panel.
- Plug the wall receptacle end of the battery charger into a 120 Volt AC wall outlet.

BATTERY REPLACEMENT

See Figure 37 .

⚠ CAUTION Battery posts, terminals contain lead and lead compounds. Wash hands after handling.

- Remove the wheel in front of the battery.
- Remove the two bolts and battery plate. Tilt the battery forward and remove.
- Disconnect the negative (–) cable (black boot) from the negative (–) battery post.
- Disconnect the positive (+) battery cable (red boot) from the positive (+) battery post.

NOTICE Always connect the cables in the following sequence to avoid possible shock.

- On the replacement battery, connect the positive (+) battery cable (red boot) to the battery positive (+) terminal. Secure the boot over the battery post.
- Connect the negative (–) battery cable (black boot) to the negative (–) positive terminal. Secure the boot over the battery post.
- Install the battery in the battery tray. Install the battery plate and bolts. Tighten the bolts securely.

NOTICE Dispose of the used battery properly according to the guidelines established by the local or state government.

- Reinstall the wheel.

FIG. 36

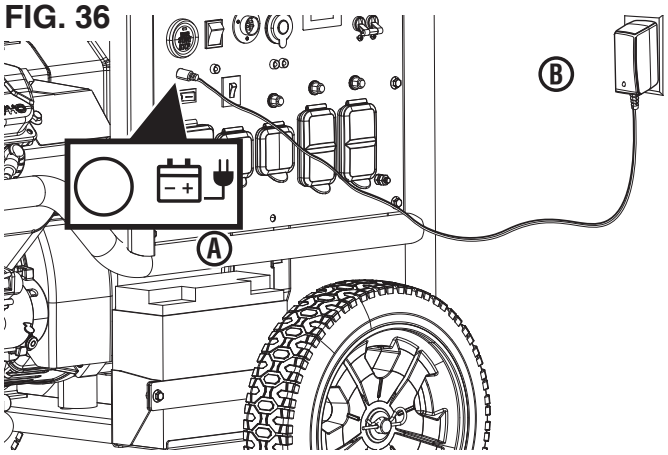

A - Battery charging port
B - Charger

FIG. 37

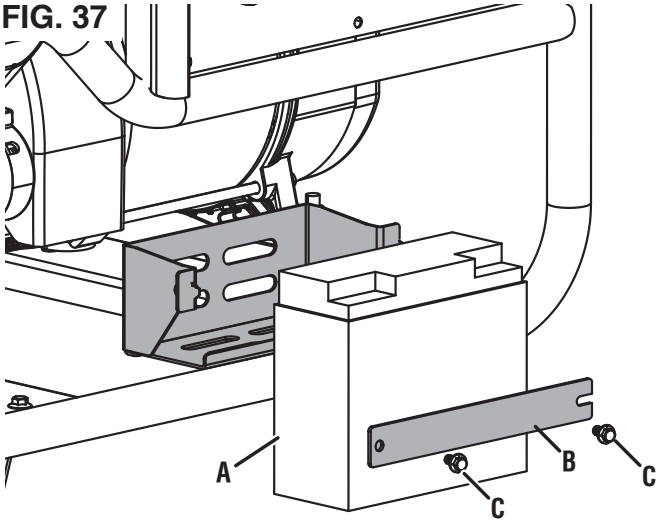

A - Battery
B - Battery plate
C - Bolt

MAINTENANCE

STORAGE

Turn the unit off and allow it to cool a minimum of 30 minutes before storage. Keep the unit upright. Do not store the generator on its side. Drain fuel before storing the unit. Store the unit and the fuel separately in well-ventilated areas away from sparks, open flames, pilot lights, heat, and other sources of ignition.

NOTICE Gasoline stored for as little as 30 days can deteriorate, causing gum, varnish, and corrosive buildup in fuel lines, fuel passages, and the engine. This corrosive buildup restricts the flow of fuel, which can prevent the engine from starting after a prolonged storage period. The use of fuel stabilizer significantly increases the storage life of gasoline. Full-time use of fuel stabilizer is recommended. Follow the manufacturer's instructions for use

STORAGE TIME	RECOMMENDED PROCEDURE
Less than 1 month	Clean the exterior of the generator and remove any debris from the muffler cooling vents.
2 to 6 months	Clean the exterior of the generator and remove any debris from the muffler cooling vents. Drain the carburetor float bowl. (Store gasoline in an approved gasoline container or dispose of it according to state and local ordinances.)
6 months or longer	Clean the exterior of the generator and remove any debris from the muffler cooling vents. Drain the carburetor float bowl and the fuel tank.(Store gasoline in an approved gasoline container or dispose of it according to state and local ordinances.) Put a tablespoon of engine oil into the spark plug cylinder. Gently pull the recoil handle to slowly turn the engine and distribute the lubricant. Reinstall the spark plug Change the engine oil.

MAINTENANCE SCHEDULE

Regular maintenance will improve performance and extend the service life of the generator. Follow the hourly or calendar intervals, whichever occurs first. More frequent service is required when operating in adverse conditions as noted below.

	Before Each Use	After First 25 Hours or First Month	After 50 Hours or Every Six Months	After 100 Hours or Every Six Months	After 300 Hours or Every Year
Inspect Engine Oil	X				
Change Engine Oil[1]		X	X		
Clean Air Filter[2]			X		
Inspect/Clean Spark Arrestor				X	
Inspect/Clean Spark Plug				X	
Inspect/Adjust Valve Clearance[3]				X	
Replace Spark Plug					X
Replace Air Filter					X
Replace Fuel Filter				X	

[1] Change oil every month when operating under heavy load or in high temperatures.
[2] Clean more often under dirty or dusty conditions. Replace air filter if it cannot be adequately cleaned.
[3] Recommend service to be performed by authorized service dealer.

TROUBLESHOOTING

Problem	Cause	Solution
Engine is running, but AC output is not available	1. Open circuit breaker 2. Poor connection 3. Defective cord set 4. Connected device is faulty 5. Fault in generator	1. Reset circuit breaker 2. Check and repair 3. Check and repair 4. Connect a device that is working properly 5. Contact service department
Engine runs well without load but bogs down when loads are connected	1. Short circuit in connected device 2. Generator is overloaded 3. Clogged fuel filter 4. Engine speed is too slow 5. Short circuit in generator	1. Disconnect device 2. See pg 11 “Don’t overload generator” 3. Clean or replace fuel filter 4. Contact service department 5. Contact service department
Engine will not start, shuts down during operation, or starts and runs rough.	1. RUN/STOP switch set to “STOP” 2. Dirty Air filter 3. Clogged fuel filter 4. Stale fuel 5. Spark plug wire disconnected from spark plug 6. Bad spark plug 7. Water in fuel 8. Fuel valve is in “OFF” position 9. Over choking 10. Low oil level 11. Rich fuel mixture 12. Intake valve stuck open or closed 13. Loss of engine compression 14. Engine has flooded 15. CO Sensor indicator light turn red 16. CO Sensor indicator light turn yellow	1. Turn switch to “RUN” 2. Replace Air filter 3. Clean or replace fuel filter 4. Replace fuel 5. Reconnect spark plug wire 6. Replace spark plug 7. Drain fuel tank and replace fuel 8. Turn fuel valve to “ON” position 9. Turn off choke 10. Fill crankcase to proper oil level & place generator on a level surface 11. Contact service department 12. Contact service department 13. Contact service department 14. Wait 5 minutes and crank engine 15. Move the generator to an open, outdoor area 16. Contact service department
Engine lacks power	1. Generator is overloaded 2. Clogged fuel filter 3. Dirty Air filter 4. Engine needs servicing	1. See pg. 11 “Don’t overload generator” 2. Clean or replace fuel filter 3. Replace Air filter 4. Contact service department
Engine “hunts” or falters	1. Choke was opened too soon 2. Clogged fuel filter 3. Carburetor is running too rich or too lean	1. Move choke to middle position until engine runs smoothly 2. Clean or replace fuel filter 3. Contact service department

SCHEMATICS

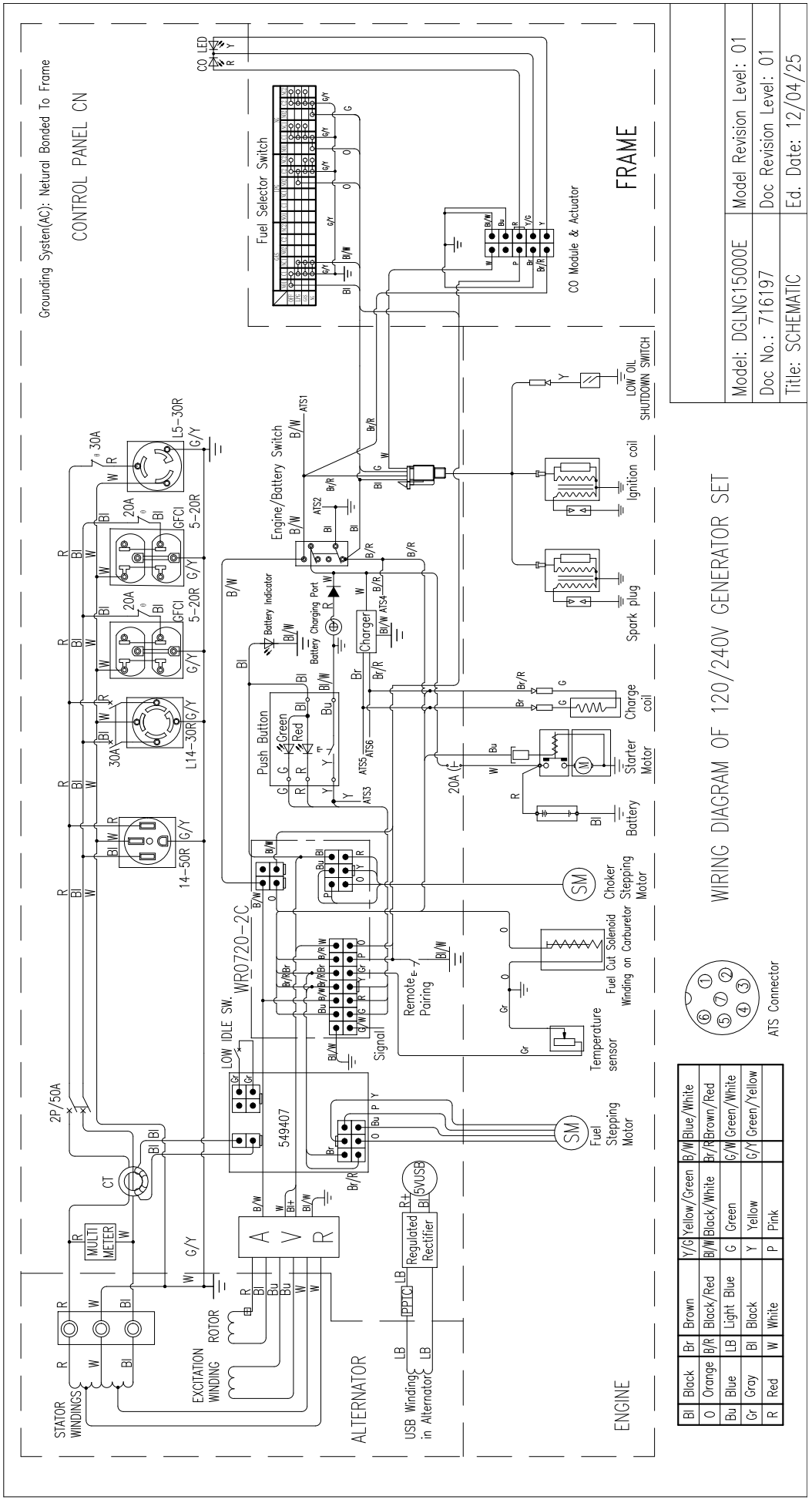
WIRING DIAGRAM OF 120/240V GENERATOR SET
Model: DGLNG15000E
Doc No.: 716197
Title: SCHEMATIC
Model Revision Level: 01
Doc Revision Level: 01
Ed. Date: 12/04/25
FRAME
ENGINE
CONTROL PANEL CN
Grounding Systen(AC): Netural Bonded To Frame
CO LED
Fuel Selector Switch
CO Module & Actuator
LOW OIL SHUTDOWN SWITCH
Ignition coil
Spark plug
Charge coil
Starter Motor
Battery
Choker Stepping Motor
Fuel Cut Solenoid Winding on Carburetor
Temperature sensor
Fuel Stepping Motor
Remote Pairing
Signal
LOW IDLE SW.
WR0720-2C
549407
Push Button
Green
Red
Battery Indicator
Battery Charging Port
Charger
Engine/Battery Switch
ATS1
ATS2
ATS3
ATS4
ATS5
ATS6
2P/50A
CT
MULTI METER
ALTERNATOR
STATOR WINDINGS
ROTOR
EXCITATION WINDING
USB Winding in Alternator
PPTC
Regulated Rectifier
5VUSB
L5-30R
5-20R
L14-30R
14-50R
GFCI
20A
30A
ATS Connector
Bl Black
O Orange
Bu Blue
Gr Gray
R Red
Br Brown
B/R Black/Red
LB Light Blue
Bl Black
W White
Y/G Yellow/Green
B/W Black/White
G Green
Y Yellow
P Pink
B/W Blue/White
Br/R Brown/Red
G/W Green/White
G/Y Green/Yellow