ASSEMBLY INSTRUCTIONS

- Chair Wooden Furniture

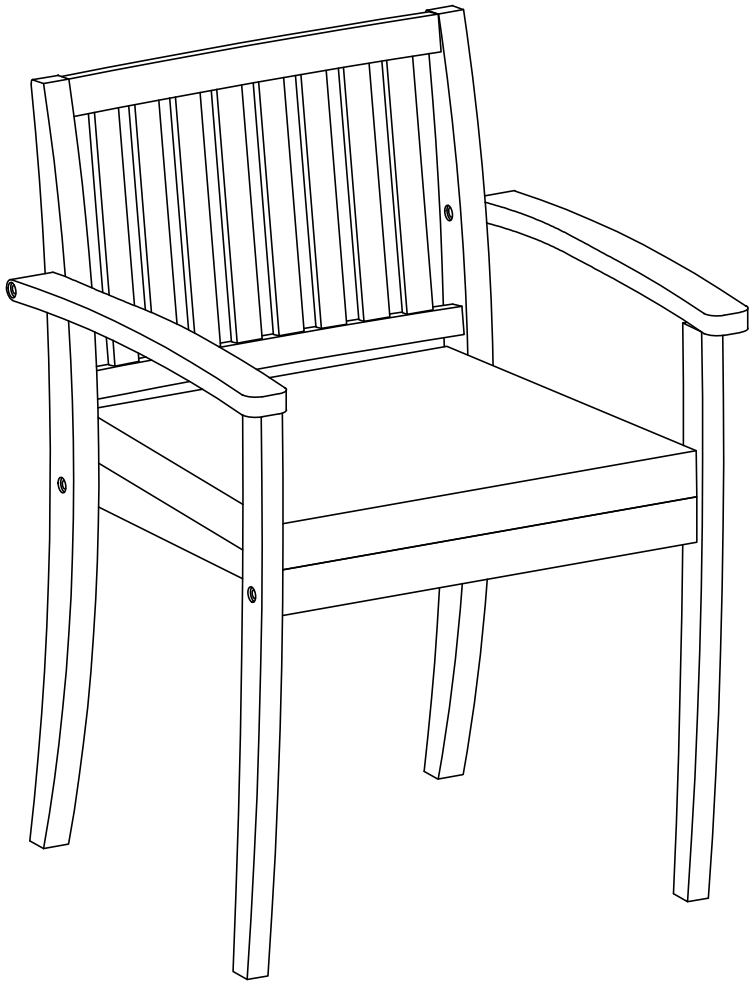

X4

If you have any assembly problem
Contact us via email: hofficeservice@gmail.com for more information.

Parts

X4

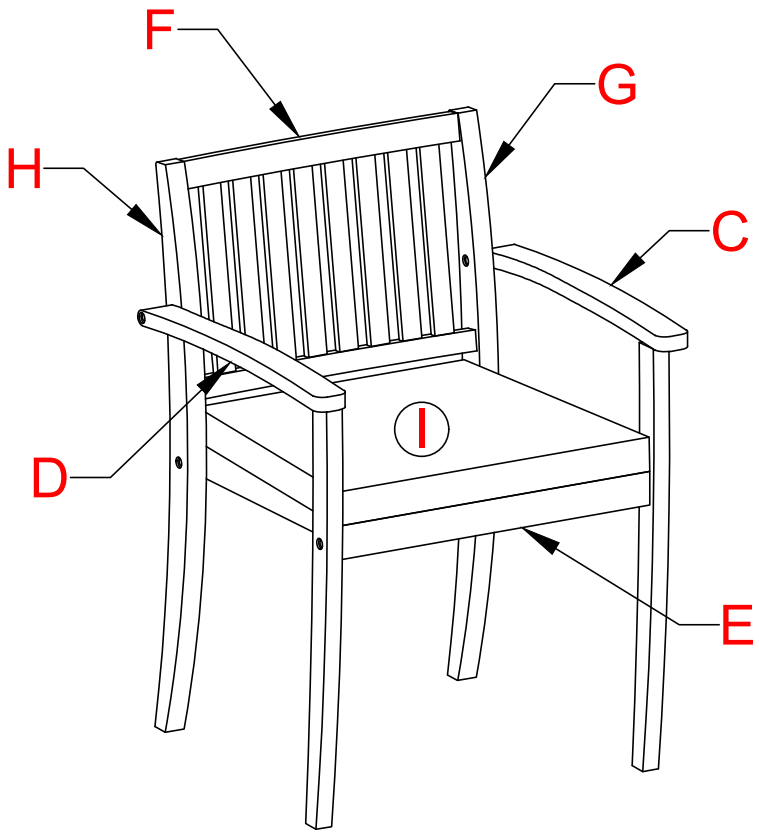

Notice:

1. 50% Tighten before fixing all screws, Allen wrench is recommended instead of an electric drill.
2. Place the item on a flat ground to adjust and make sure it remains stable.
3. Tighten up all screw with tools gradually.
4. If screw are not aligned with holes during assembly, please loosen all the other screws to 50% and continue the assembly process.
5. If the item is not stable, please loosen all screws, adjust it on a flat ground and tighten up all screws again.
6. Note: If one or some screws are fully tighten during assembly, chances are the others will not be aligned with holes. In addition, all the holes are designed to be relatively larger to provide more space for the adjustment of the screws
7. Remove the sponge from the cushion when washing,Hand wash only. The washing machine and brush harm the fabric.

Parts List And Hardware List

Check and make sure you get the components on the list, contact us for any missing

C Arm Left (4Pcs) 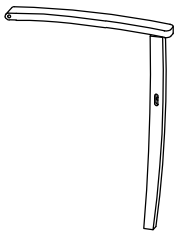	D Arm Right (4Pcs) 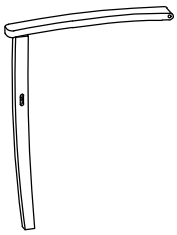	E Seat (4Pcs) 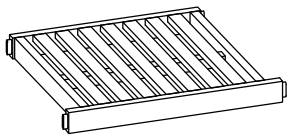	F Back (4Pcs) 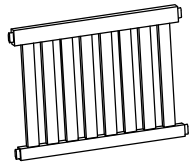
G Leg Left (4Pcs) 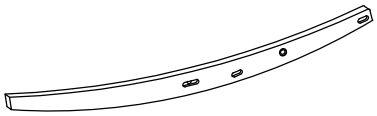	H Leg Right (4Pcs) 	I Seat Cushion (4Pcs) 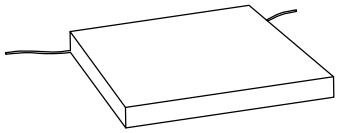	

3 Allen Key (2Pcs) 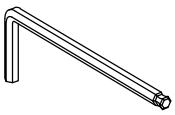	4 Screw Bolt M6x70mm (16Pcs) 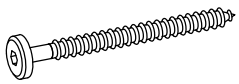	5 Screw Bolt M7x90mm (16Pcs) 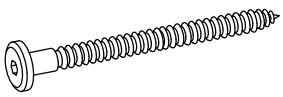	6 Bolt M8x70mm (8Pcs) 
7 Nut M8 (8Pcs) 	8 Washer (8Pcs) 		

Installation step

For successful installation, When installing, please do not tighten the screws once, when the screws are all installed, a unified tighten all the screws

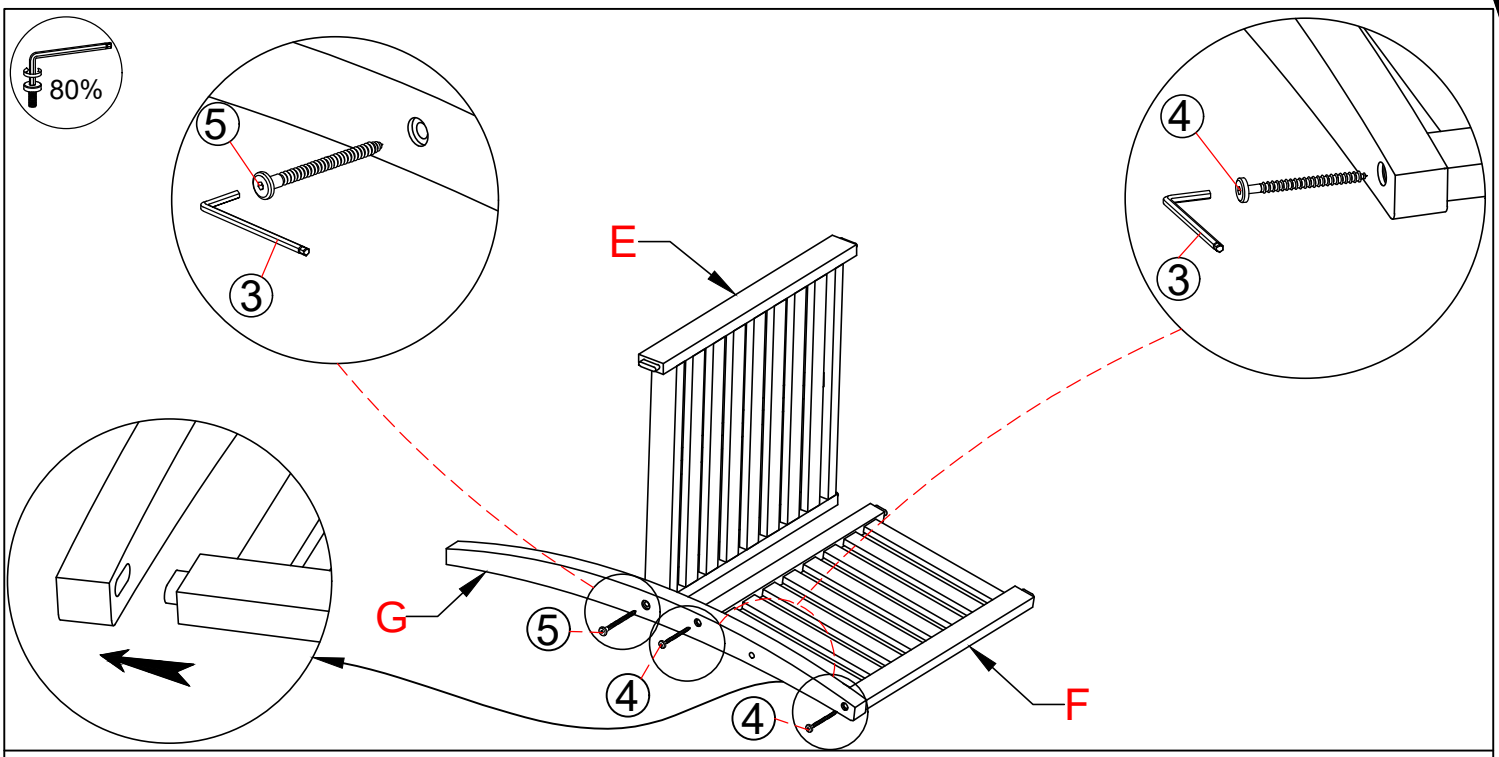

Step 1: Connect Leg Left (G) & Seat (E), Back (F), tighten Screw Bolt (4), (5) with Allen Key (3)

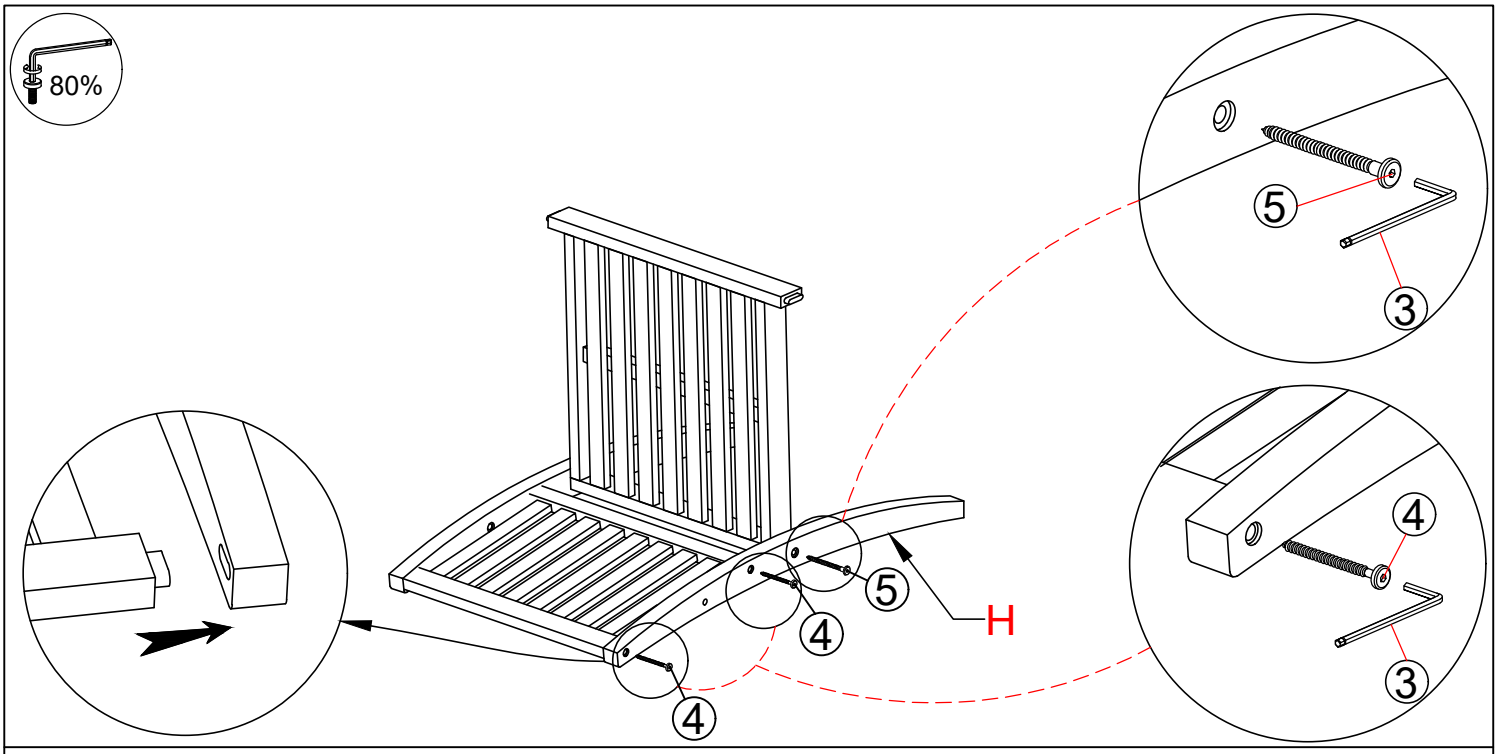

Step 2: Connect The Part from Step 1 & Leg Right (H), tighten Screw Bolt (4), (5) with Allen Key (3)

Installation step

For successful installation, When installing, please do not tighten the screws once, when the screws are all installed, a unified tighten all the screws

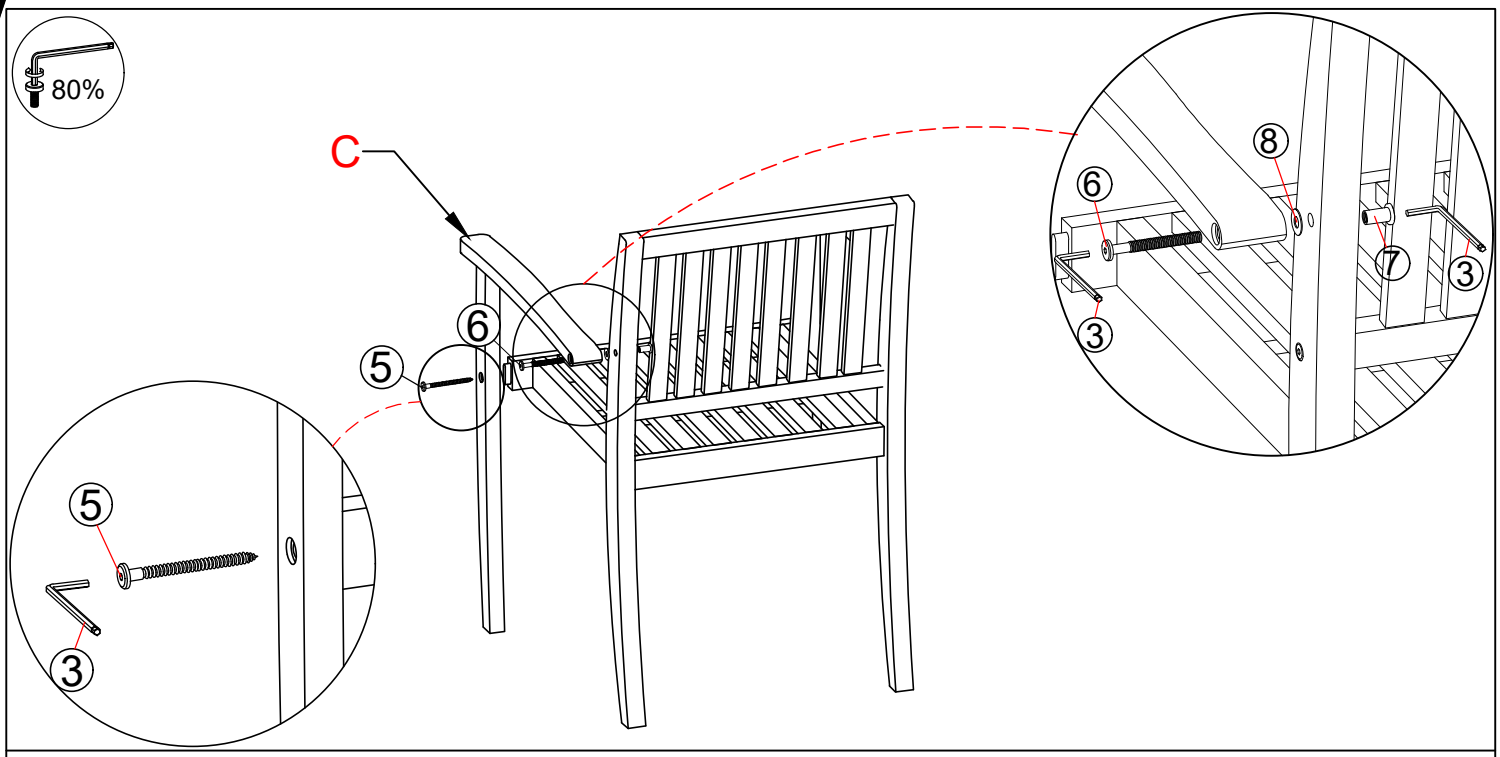

Step 3: Connect The Part from Step 4 & Arm Left (C), tighten Bolt (6), Washer (8), Nut M8 (7), Screw Bolt (5) with Allen Key (3).

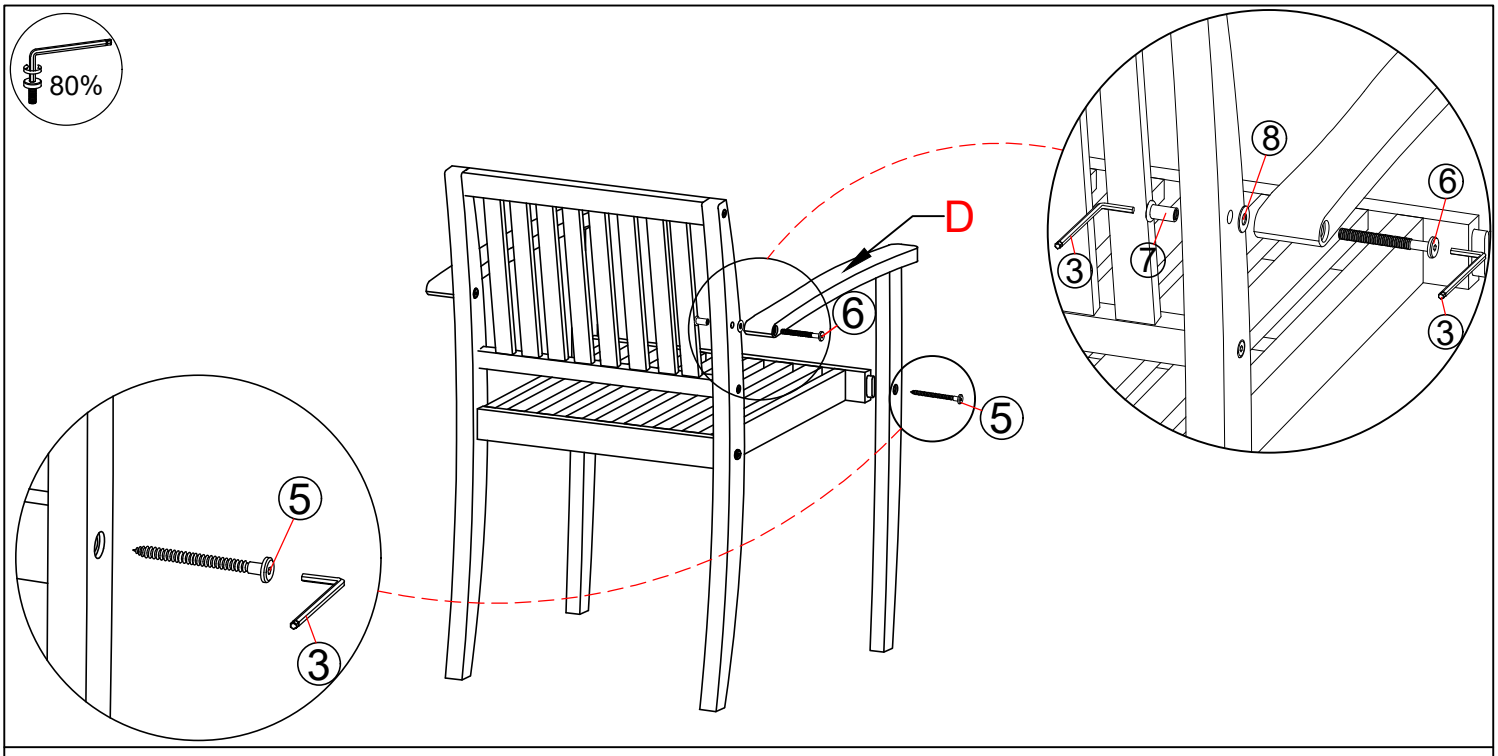

Step 4:Connect The Part from Step 3 & Arm Right (D), tighten Bolt (6), Washer (8), Nut M8 (7), Screw Bolt (5) with Allen Key (3).

Installation step

For successful installation, When installing, please do not tighten the screws once, when the screws are all installed, a unified tighten all the screws

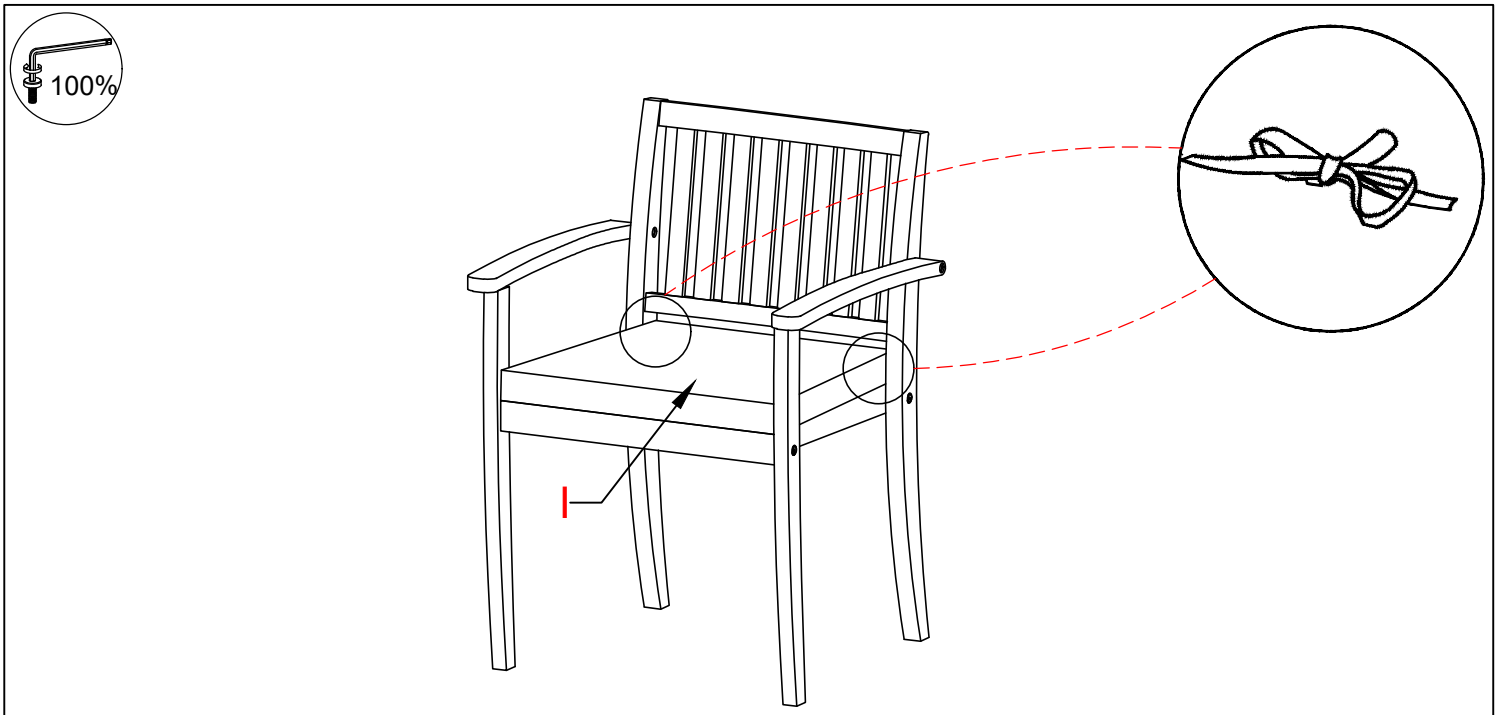

Step 5: Put on Seat Cushion (I) , Stick string to Back Bench to finish Chair.

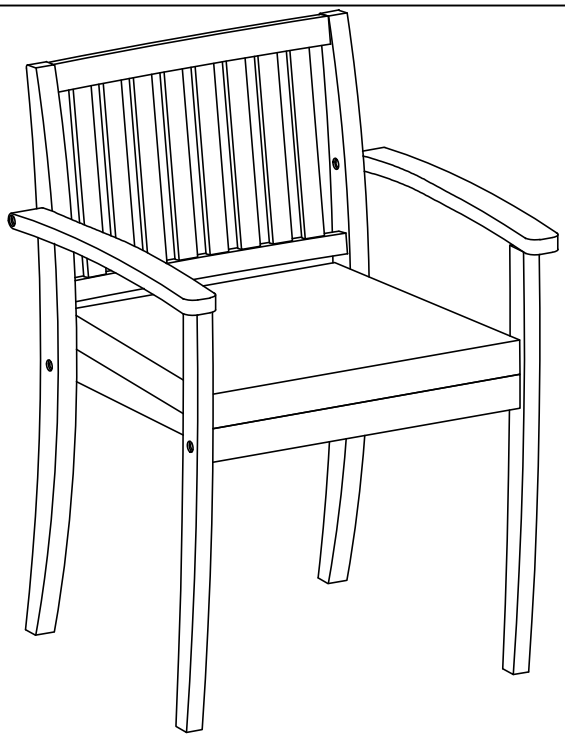

FINISH