CRYSTORAMA

LIGHTING THE WAY FOR SIXTY YEARS

Crystorama.com

ASSEMBLY INSTRUCTION MODEL# BRH-M530-SA

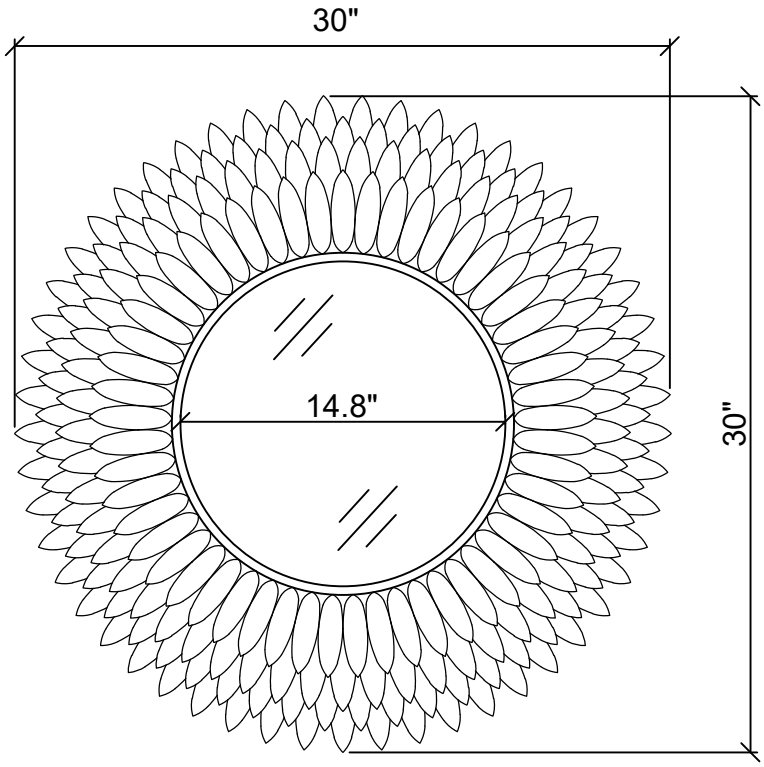

When removing the mirror from the box, please gently hold and lift from the outermost leaf ONLY.

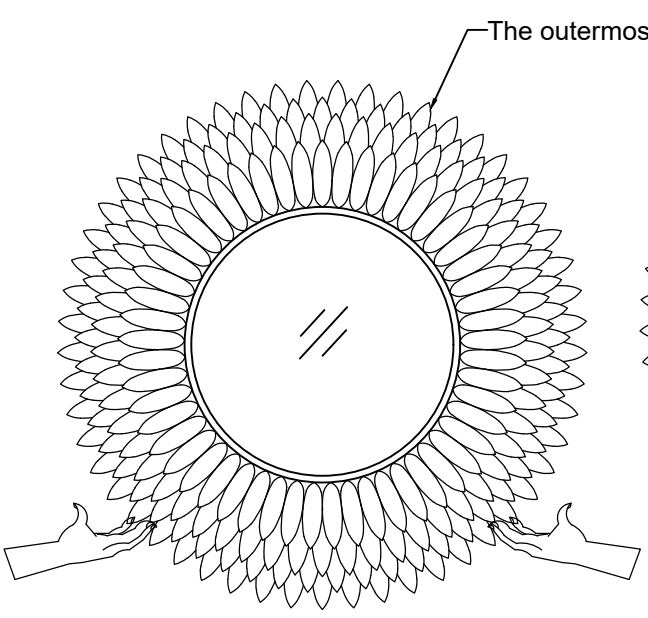

FRONT VIEW

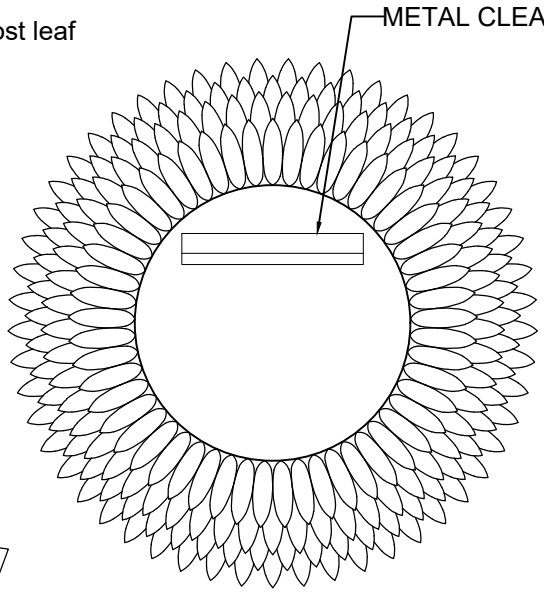

BACK VIEW

WARNING: This product can expose you to Lead which is known to the state of California to cause cancer and/or birth defects or reproductive harm. For more information go to www.P65Warnings.ca.gov

CRYSTORAMA

LIGHTING THE WAY FOR SIXTY YEARS

Crystorama.com

ASSEMBLY INSTRUCTION MODEL# BRH-M530-SA

INSTALLATION INSTRUCTIONS

ITEMS INCLUDED

Anchor(A): Ø7.5[mm]x36[mm]x3 Wall cleat: x1

Screws(B): Ø4[mm]x40[mm]x3

NECESSARY TOOLS (NOT INCLUDED)



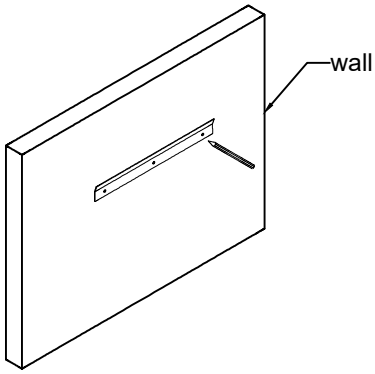

Step 1

Place the metal cleat at the desired wall location and mark three points at the center of the hole on the metal cleat using the pencil.

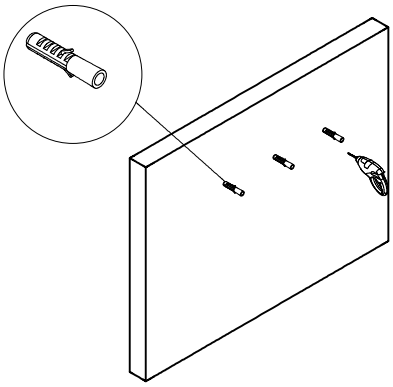

Step 2

Drill the holes at the marked points and insert the anchors into the hole.

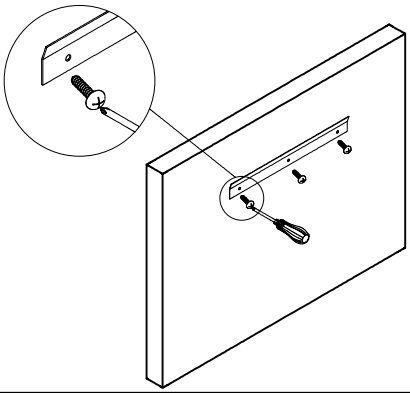

Step 3

Mount the metal cleat onto the wall surface using the screws supplied. Make sure that the metal cleat is straight using a level.

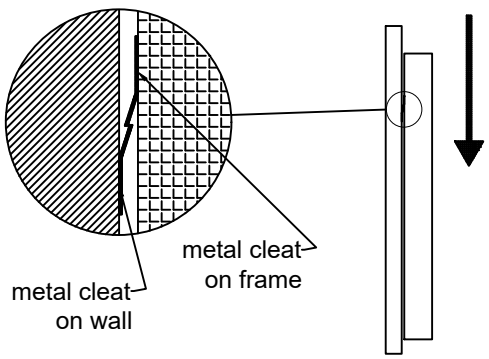

Step 4

Gently hold the outermost leaf of the mirror and hang it onto the metal cleat.