WHOLE HOUSE

iSpring WGB & WDS Series Heavy Duty Water Filtration Systems

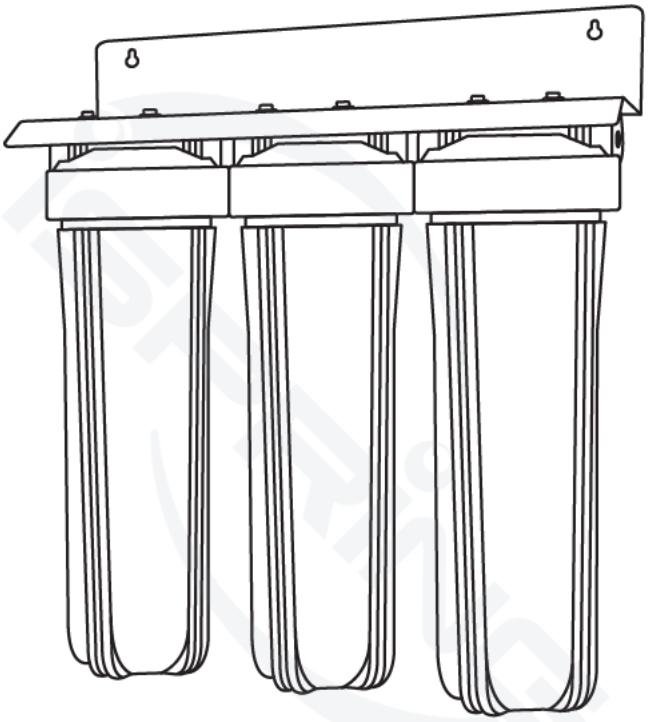

*Actual product appearance may vary based on the model purchased.

Installation Instructions & User Manual

Ver. 03/2025

iSpring Water Systems

Scan for FREE extended warranty

Copyright ©2005-2025 ISPRING WATER SYSTEMS, LLC. All rights reserved.

Thank you for choosing iSpring Water Filtration Systems! Built from quality components and delivering exceptional performance, this system is designed to provide you and your loved ones with a continuous, on-demand supply of clean and refreshing filtered water for many years.

This manual includes the necessary information on properly installing, operating, and maintaining your iSpring Water Filtration System.

Please keep this manual for future reference.

Attention Installers

Only use food-grade grease on O-rings. The O-rings that come with the original package are already lubricated and ready to use.

If you have any questions, please contact us at
+1 (678) 261-7611 (Monday - Friday, 9:00 AM to 5:00 PM EST) or email us at support@ispringfilter.com.

Fitting Installation

Depending on the actual size of the pipe, up to 12 - 15 wraps of plumber's tape might be required to seal the pipe connections. Apply 6 - 7 wraps of tape and press into threads without cutting. Apply 6 - 7 more wraps and neatly form before installation.

Plumber's tape can be purchased on our website at www.ispringfilter.com.

Table of Contents

Product Overview 1

- Product and Specifications 1
- Component List 1
- Tools Needed 1
- Parts Not Included 1

Installation 2

- Pre-installation Considerations 2
- Pre-installation Preparation 2
- Installation Overview 3
- Installation Instructions 5

Maintenance Instructions 9

Filter Change Instructions 10

Troubleshooting 11

Frequently Asked Questions 12

Product Overview

Product and Specifications

Flow Rate	3-15 GPM
Working Pressure	25-80 psi
Working Temperature	40-100°F
pH Requirement	6.0-9.0
Recommended Flow Rate	Systems with filter Model #FC25B-PF: 5.3 GPM Systems with filter Model #FC15B-PF: 2.7 GPM

Component List

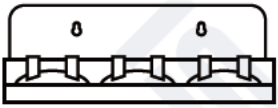

System Bracket with Cap



Wrench (Model #AWR3)

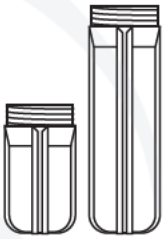

Housing (20" Model #HB28B;
10" Model #HB18B)

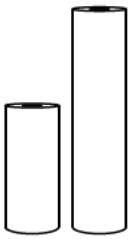

Filter Cartridge

The appearance, number of components, and filter model may vary depending on the specific model purchased.

Tools Needed

Safety Glasses	Pipe Cutter
Towels	Torch
Flat Head Screwdriver	Adjustable Wrench & Medium Crescent Wrench
Deburring Tools	Plumber's Tape

Parts Not included

- (4x) Shutoff valves
- (2x) Hex nipples or pipe nipples
- (2x) Pipe union pressure regulators (as needed)
- (1x) Ground jumper cable
- (2x) Mounting screws

• (2x) 1" male NPT threaded adapters

• (2x) Pipe hangers

Installation

Pre-installation Considerations

- This installation guide provides a step-by-step procedure for installing your iSpring whole-house water filter. The steps provided here are for typical installations only; your specific application may vary.
- Ensure that no water used with the filter is microbiologically unsafe, of unknown quality, or has not been adequately disinfected.
- The filter should be kept in a sheltered location and never exposed to freezing temperatures, extreme heat, or direct sunlight. Damage from these conditions is not covered under warranty.
- Ensure the inlet/outlet markings and the water flow direction are correct.
- A three-valve bypass valve and loop may be installed to loop the entire system to make servicing easier.
- Hard copper pipes generally come in two types. Use the thicker "L" type copper pipe rather than the thinner "M" type copper pipe.
- Follow all local plumbing and building codes. Ensure to use plumber's tape on threaded fittings.
- If you or your plumber have any questions regarding installation, contact iSpring Customer Support at +1 (678) 261-7611 (Monday to Friday, 9:00 AM – 5:00 PM EST). We are happy to assist you.

Pre-installation Preparation

- Turn off the water supply directly to your house before beginning the installation.
- Turn off the power supply for your water heater before installation.
- Open plumbing fixtures in the house tO drain the lines Of water and pressure.
- Lay out the fittings and tools you will need to install the system for your

Installation Overview

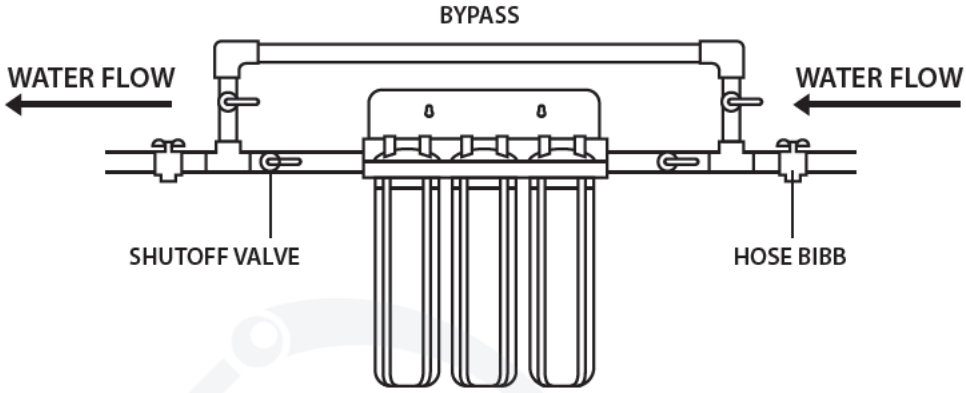

*Actual product appearance may vary based on the model purchased.

Model	Stage 1	Stage 2	Stage 3
WGB32B	PP Sediment Removal (Model #FP25B)	Carbon Block CTO (Model #FC25B)	Carbon Block CTO (Model #FC25B)
WGB32B-KS	PP Sediment Removal (Model #FP25B)	GAC + KDF (Model #FG25B-KS)	Carbon Block CTO (Model #FC25B)
WGB32BM	PP Sediment Removal (Model #FP25B)	Carbon Block CTO (Model #FC25B)	Iron & Manganese Removal (Model #FM25B)
WGB32B-CPB	PP Sediment Removal (Model #FP25B)	Carbon Block CTO (Model #FC25B)	Lead Removal CTO (Model #FC25B-PB)
WGB32B-PB	PP Sediment Removal (Model #FP25B)	Carbon Block CTO (Model #FC25B)	Lead Removal (Model #FCRC25B)
WGB32B-MKS	PP Sediment Removal (Model #FP25B)	GAC + KDF (Model #FG25B-KS)	Iron & Manganese Removal (Model #FM25B)
WGB32B-DS	PP Sediment Removal (Model #FP25B)	Anti-scale (Model #FWDS150K)	Carbon Block CTO (Model #FC25B)
WGB32B-KDS	Anti-scale (Model #FWDS150K)	GAC + KDF (Model #FG25B-KS)	Carbon Block CTO (Model #FC25B)
WGB32B-PF	PP Sediment Removal (Model #FP25B)	Carbon Block CTO (Model #FC25B)	PFAS Removal (Model #FC25B-PF)
WGB32B-PFKS	PP Sediment Removal (Model #FP25B)	PFAS Removal (Model #FC25B-PF)	GAC + KDF (Model #FG25B-KS)
WGB32B-PFKDS	PFAS Removal (Model #FC25B-PF)	GAC + KDF (Model #FG25B-KS)	Anti-scale (Model #FWDS150K)
WGB22B	PP Sediment Removal (Model #FP25B)	Carbon Block CTO (Model #FC25B)	/
WGB22B-KS	PP Sediment Removal (Model #FP25B)	GAC + KDF (Model #FG25B-KS)	/
WGB22B-CPB	PP Sediment Removal (Model #FP25B)	Lead Removal CTO (Model #FC25B-PB)	/
WGB22BM	Carbon Block CTO (Model #FC25B)	Iron & Manganese Removal (Model #FM25B)	/

Model	Stage 1	Stage 2	Stage 3
WGB22B-PB	Carbon Block CTO (Model #FC25B)	Lead Removal (Model #FCRC25B)	/
WGB22B-DS	Carbon Block CTO (Model #FC25B)	Anti-scale (Model #FWDS150K)	/
WGB12B	Carbon Block CTO (Model #FC25B)	/	/
WGB12B-CPB	Lead Removal CTO (Model #FC25B-PB)	/	/
WDS150K	Anti-scale (Model #FWDS150K)	/	/
WDS80K	Anti-scale (Model #FWDS80K)	/	/
WGB31B	PP Sediment Removal (Model #FP15B)	Carbon Block CTO (Model #FC15B)	Carbon Block CTO (Model #FC15B)
WGB31B-KS	PP Sediment Removal (Model #FP15B)	GAC + KDF (Model #FG15B-KS)	Carbon Block CTO (Model #FC15B)
WGB31BM	PP Sediment Removal (Model #FP15B)	Carbon Block CTO (Model #FC15B)	Iron & Manganese Removal (Model #FM15B)
WGB31B-CPB	PP Sediment Removal (Model #FP15B)	Carbon Block CTO (Model #FC15B)	Lead Removal CTO (Model #FC15B-PB)
WGB31B-PB	PP Sediment Removal (Model #FP15B)	Carbon Block CTO (Model #FC15B)	Lead Removal (Model #FCRC15B)
WGB31B-MKS	PP Sediment Removal (Model #FP15B)	GAC + KDF (Model #FG15B-KS)	Iron & Manganese Removal (Model #FM15B)
WGB31B-DS	PP Sediment Removal (Model #FP15B)	Anti-scale (Model #FWDS80K)	Carbon Block CTO (Model #FC15B)
WGB31B-KDS	Anti-scale (Model #FWDS80K)	GAC + KDF (Model #FG15B-KS)	Carbon Block CTO (Model #FC15B)
WGB31B-PF	PP Sediment Removal (Model #FP15B)	Carbon Block CTO (Model #FC15B)	PFAS Removal (Model #FC15B-PF)
WGB31B-PFKS	PP Sediment Removal (Model #FP15B)	PFAS Removal (Model #FC15B-PF)	GAC + KDF (Model #FG15B-KS)
WGB31B-PFKDS	PFAS Removal (Model #FC15B-PF)	GAC + KDF (Model #FG15B-KS)	Anti-scale (Model #FWDS80K)
WGB21B	PP Sediment Removal (Model #FP15B)	Carbon Block CTO (Model #FC15B)	/
WGB21B-KS	PP Sediment Removal (Model #FP15B)	GAC + KDF (Model #FG15B-KS)	/
WGB21B-CPB	PP Sediment Removal (Model #FP15B)	Lead Removal CTO (Model #FC15B-PB)	/
WGB21BM	Carbon Block CTO (Model #FC15B)	Iron & Manganese Removal (Model #FM15B)	/
WGB21B-PB	Carbon Block CTO (Model #FC15B)	Lead Removal (Model #FCRC15B)	/
WGB21B-DS	Carbon Block CTO (Model #FC15B)	Anti-scale (Model #FWDS80K)	/
WGB21B-PF	PP Sediment Removal (Model #FP15B)	PFAS Removal (Model #FC15B-PF)	/
WGB21B-PFKS	PFAS Removal (Model #FC15B-PF)	GAC + KDF (Model #FG15B-KS)	/

Installation Instructions

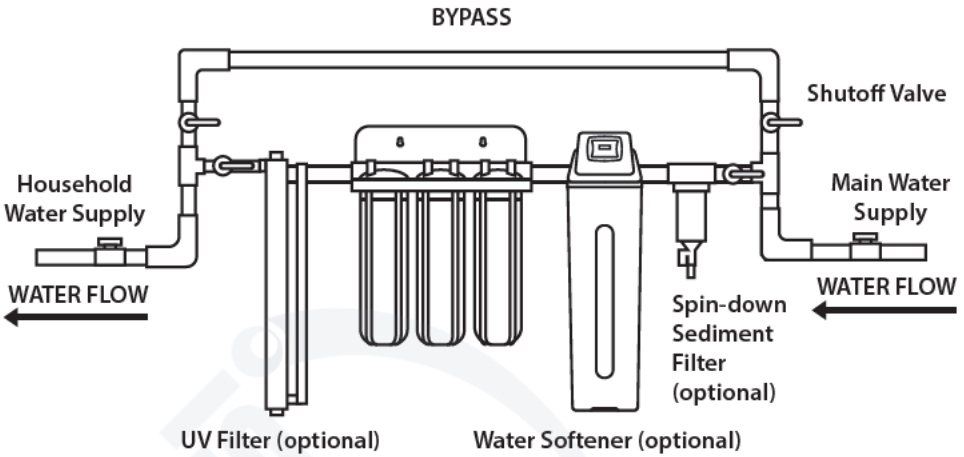

*Actual product appearance may vary based on the model purchased.

- The filter should be placed on the main water supply line near where it enters the house at any point past the main shutoff valve for the whole house, but before pipes branch off into multiple directions. However, you may choose to locate the filter after the line branches to the inside and outside plumbing depending on your filtration intent. **Your filter should be located in a dry, level area and protected from freezing temperatures and direct sunlight.**

Note:
The system series come with a 1" NPT Female inlet/outlet, which may require additional fittings to adapt to your plumbing. A shut-off valve is recommended before the water bypasses the system. See Installation Instructions step 3 for more information.

Step 1 - Measure the System and Cut the Pipe

- Determine the location and water flow direction for the system.

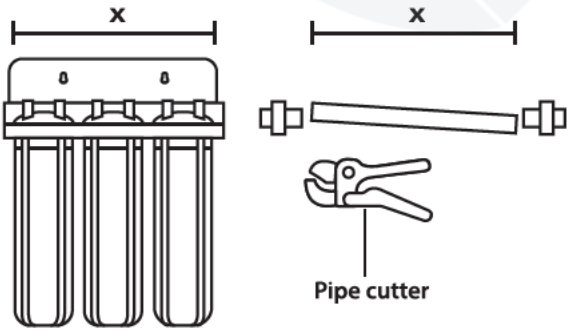

Note:
If the water flow of the pre-installed caps union points conversely to your water flow, you can reverse the caps union by unscrewing the bolts that connect it with the bracket.

- Measure, cut, and remove the section of water line where the system is to be installed. **When determining the length of the pipe to cut, account for filter width, shutoff valves, union fittings, nipple fittings, pressure gauges (if used) and bypass valves (if used).**

- Allow the cut line to drain. Smooth the newly cut ends down (with a deburring tool, if necessary) to avoid jagged points or edges.

Step 2 - Mount the Filter Bracket

- Securely mount the whole house filter bracket and ensure the system is level. (Screws are not included.)



*Actual product appearance may vary based on the model purchased.

- Attach your plumbing to the INLET and OUTLET with 1" male NPT threaded adapters (not included). Apply 12-15 wraps of plumber's tape to each adapter to prevent leakage.

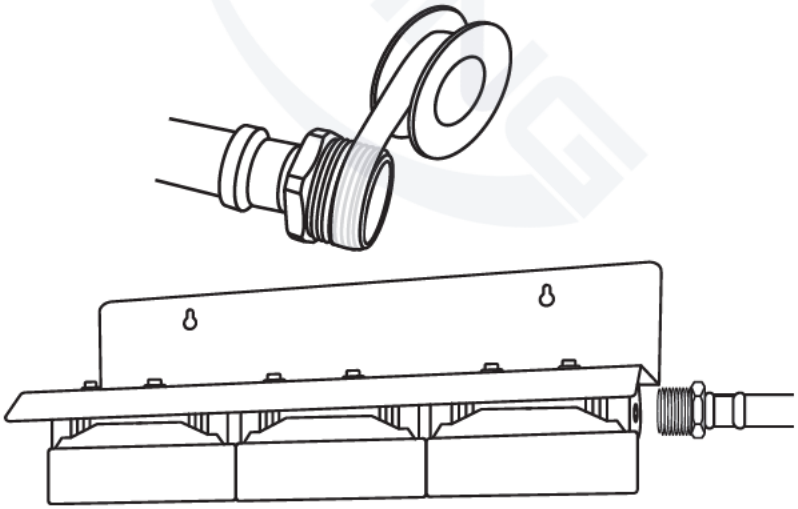

*Actual product appearance may vary based on the model purchased.

Step 3 - Add the Shutoff Valve and Pressure Gauge (Optional)

- Place a shutoff valve (not included) and/or a pressure gauge (not included) on either side of the filter for ease of monitoring and use.

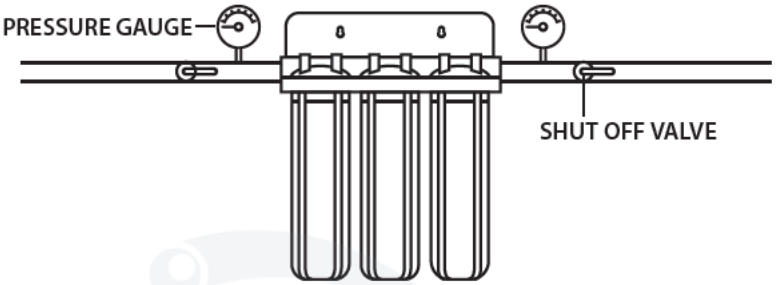

*Actual product appearance may vary based on the model purchased.

1) You may need to adjust pipe length or distance. Fit a pipe union (not included) onto the cut section of the main water line.

2) Fit together pipe union and shutoff valve. Use Plumber's tape on threaded fittings.

3) Simultaneously fit together shutoff valve and whole house filter using pipe nipple (not included) or hex nipple (not included) to draw them together on the FEED side of the filter.

4) Simultaneously fit together filter and the shutoff valve on the OUTLET side of the filter. Fit pipe union to shutoff valve on OUTLET side.

5) Check pipe length and pipe union length to see if additional pipe length or union is required. Join pipe union and pipe.

6) Fit pipe hanger (not included) on water INLET and OUTLET side for additional support.

Step 4 - Connect Ground Jumper Wire

- Connect ground jumper wire if you have metal pipes.

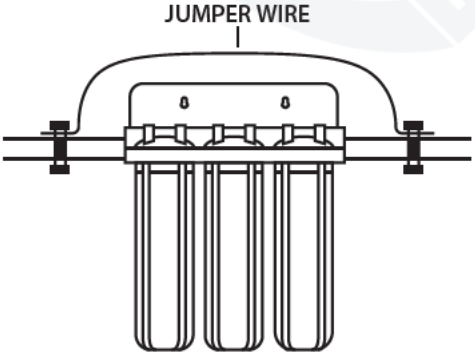

*Actual product appearance may vary based on the model purchased.

Step 5 - Filter Cartridges and Housing Assembly

- Unwrap each filter cartridge and insert it into the corresponding housing, ensuring it is centered on the standpipe. Make sure the housing center knob fits securely into the filter's central hole.

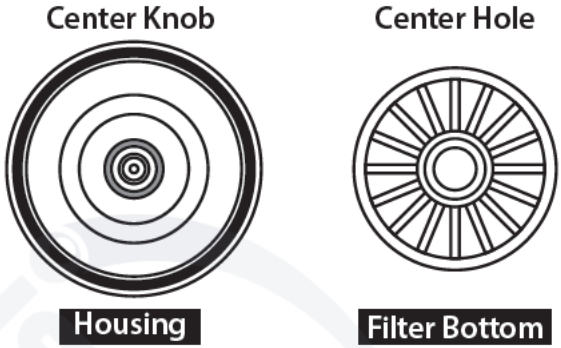

- Hand-tighten the filter housing. Then, using the included filter wrench, turn the housing while being careful not to over-tighten.

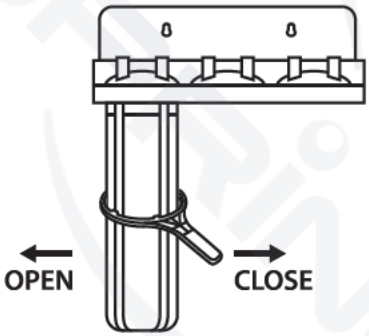

*Actual product appearance may vary based on the model purchased.

Step 6 - Turn on the Water Supply and Flush the System

- Slowly turn on the cold water supply to fill the housing. Wait a few minutes until the sound of water entering the system stops.
- Check for leaks.
- Open the nearest cold water faucet and let the water run for approximately 10 minutes to flush out carbon fines.

Note:

- Do not use a hot water faucet for the initial flush.
- The initial water flow may appear blackish or cloudy due to carbon dust and air bubbles released from the new filters. This is a normal occurrence and should clear within one to two days.
- If cloudiness persists, turn off the water, allow the system to sit for a period, then repeat the flushing process.
- After extended periods of non-use, such as vacations, it is recommended to flush the system for at least 10 minutes before consumption.

Step 7 - Turn off the Faucet and Your System is Ready for Use

Note:

- Even though the cold water lines now contain filtered water, the hot water heater still holds unfiltered water.
- Through regular use, the hot water will gradually be replaced with filtered water within 2 to 3 days.

Maintenance Instructions

Filter Lifespan

Filter Type	PP	CTO	GAC	GAC+KDF	Iron/Manganese Removal	Lead Removal CTO	Anti-scale	PFAS Removal Carbon Fiber	Deionization
Model Series	FP	FC	FG	FG-KS	FM	FC-PB	FWDS	FC-PF	FD
Max. Lifespan (month)	6	12	12	12	12	12	12	12	12

*Filter lifespan varies depending on the quality of incoming water and the amount of water consumed daily.

Note:

All filter cartridges must be replaced periodically. Failure to replace filter cartridges as recommended will void the product warranty and may result in limited performance, damage to the system, and water damage to the property.

Your iSpring Whole House Water System requires scheduled maintenance. It is recommended to replace the cartridges every 6-12 months, depending on the number of contaminants present in the water supply. The system has been working correctly, but the pressure is slowing, so it may be time to change the filter cartridge.

If you or your plumber have any questions regarding installation, please contact iSpring Customer Support at +1 (678) 261-7611 (Monday to Friday, 9:00 AM – 5:00 PM EST). We are available to assist you.

Filter Change Instructions

Part 1 - Remove the Old Cartridge

- Turn off the water supply to the system. Open a nearby faucet to release the pressure and drain the water.
- Unscrew the housing using the filter wrench that was included with your system.
- Locate and remove the large O-ring using a small, clean flat head screwdriver. Try not to wipe off any of the lubricant. Set it aside in a clean, safe place.
- Discard the old filter cartridge.

Part 2 - Clean the Housing

- Wash the housing and cap with warm water and approximately 2 tablespoons of household bleach using a sponge or soft cloth. Wear rubber gloves. **Rinse all parts thoroughly.**
- Lubricate the O-ring with silicone grease if necessary. **Do not use petroleum lubricant.**
- Reinsert the O-ring into the groove and press it securely into place. **Ensure it is properly seated.**

Note:
The housing must be properly sealed to prevent leakage. Ensure the O-ring(s) are evenly seated in the groove of the housing. If the O-ring(s) are damaged or crimped, contact iSpring customer service for a replacement or purchase the correct O-ring model: Model #ORB for 4.5"-diameter filter housing, and Model #ORF2 for 20" x 2.5" filter housing at **www.ispringfilter.com**.

Part 3 - Installing a Cartridge

- Remove the new filter packaging and insert the filter cartridge into the housing. Make sure they slip over the standpipe at the bottom of the housing.
- Align the bottom of the housing into the cap and hand tighten. Then use the filter wrench to fit it snugly. **Do not over-tighten.**
- Close any open valves. Turn on the water supply slowly to allow the system to fill with water. **Inspect carefully for leaks.** If a leak is found, remove the housing and inspect the O-ring to ensure that it is seated properly, and then retighten.

Part 4 - Flush the System

- Flush the system by turning on a few cold-water faucets. Allow the water to run until the air and carbon has been purged. Water may be cloudy initially as the filters and system clear of trapped air. New activated carbon filter cartridges may contain loose carbon and air bubbles after installation.

Troubleshooting

Issue	Solution
Water pressure drops after a period of time	Replace the filter cartridges every 6-12 months, depending on water quality. If pressure continues to drop despite proper operation, consider replacing the filters.
Water pressure drops immediately after installation	1) Ensure the plastic wrapping is removed from the filter cartridges. 2) Avoid high-flow fixtures (bathtubs, utility sinks, hose bibs, multi-head showers, sprayers) for the first 72 hours, as they may cause temporary carbon blockage. If blockage occurs, turn off water for at least 10 minutes, then resume using water at low or normal flow rates.
Water appears cloudy and gray	This is normal and should clear within 3-5 days. Tiny air bubbles and extra carbon dust from the filters cause this effect.
Leaking from the housing connection	The O-ring may not be in place. If it still leaks after adjusting the O-ring, please contact iSpring Customer Service at +1 (678) 261-7611 or email us at support@ispringfilter.com

Frequently Asked Questions

Q: With this whole house system, do I still need to install a water softener if my water is very hard?

A: Yes, a water softener is needed if your source water has a high level of hardness, usually with hardness higher than 60 ppm. Hard water can reduce the lifespan of whole house water filter cartridges. The harder the water, the greater amount of scale buildup occurs, and the sooner the filters get clogged.

This whole house water filter can remove 95% of sediment, chlorine, rust, and various other contaminants that a regular water softener can't; however, it does not soften your water.

To determine which product best suits your needs, it is recommended that you get a professional water test done prior to purchase to identify the main issue of your source water.

Note:
Water softeners and whole house systems usually do not lower the TDS level of the water. An additional reverse osmosis system may be necessary for your drinking water. Please consult iSpring professionals prior to your purchase if you are unsure which product will meet your needs.

Like our products?
Please show your support by writing a product review on the marketplace where you make your purchase. Even just a quick statement means a lot to us.

Thank you!

iSpringFilter.com

Scan to get your FREE warranty

For questions, comments, or technical support, please contact us at:

support@ispringfilter.com

+1 (678) 261-7611

+1 (470) 560-0012

Monday-Friday 9:00 a.m. - 5:00 p.m. EST

Water's Good®