

NKSS-SBFARM Stainless Steel Farmhouse Kitchen Sink

Requested By:

_____

Specific Features:

_____

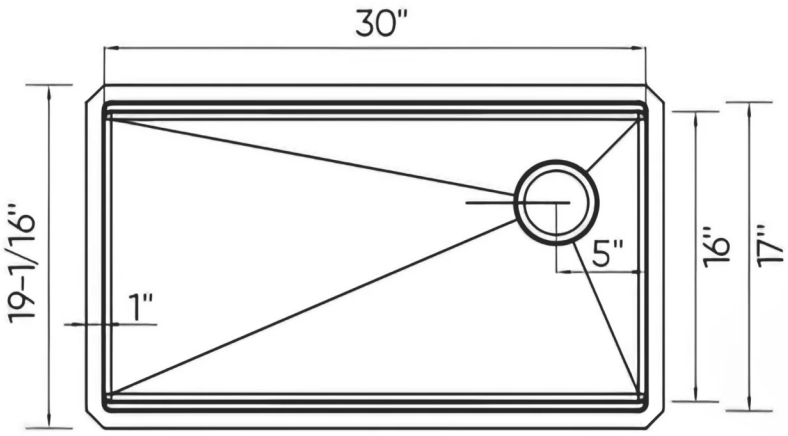

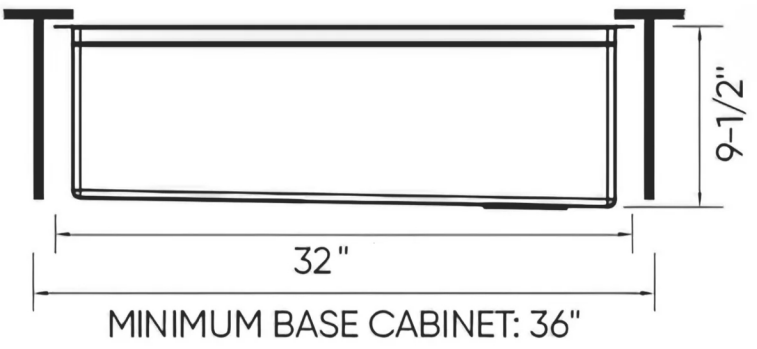

STANDARD SPECIFICATIONS:

- Single large kitchen sink
- All accessories included
- Stainless Steel 304 18/8 chromium-nickel
- Undermount installation
- 16-gauge thickness
- Sound deadening insulation
- 3.5" drain opening
- Standard U.S. plumbing connection

WARRANTY:

Limited lifetime warranty

- See www.Novatto.com for details

INCLUDED ACCESSORIES:

- NKSD-024BN Extra Long Strainer Basket Drain with Lid
- 28 x 14.5-inch Stainless Steel Kitchen Sink Grate w/ Cushioned Legs
- Colander, Cutting board, Grid and Strainer

NOTES

Novatto reserves the right (1) to make changes in specifications and materials, and (2) to change or discontinue models, both without notice or obligation. Dimensions are for reference only, see www.Novatto.com for finish options and product availability.

Novatto Inc
TOLL FREE 844.404.4242
www.Novatto.com