ASSEMBLY

IMPORTANT: This mower is shipped without gasoline in the engine. Be certain to service engine with gasoline and check oil as instructed in the Operation section of the Engine Manual before starting or operating the mower.

NOTE: References to LEFT, RIGHT, FRONT, and REAR indicate that position on the mower when facing forward while standing on the operator's platform.

Mower Preparation

TOOLS NEEDED: Safety glasses, leather gloves, wire cutters.

1. Remove the upper crating material from the shipping pallet, and cut any bands or tie straps securing the mower to the pallet.
2. Use the deck lift handle (a) to raise the deck to the transport lock position (b) (highest adjustment setting) and insert the clevis pin (c) into the highest mowing setting (d) to secure the deck lift handle in place. See Figure 1.

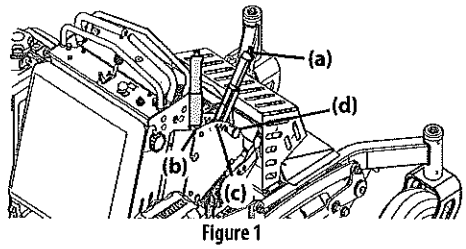

Figure 1

IMPORTANT: The mower is equipped with two hydrostatic transmissions. Each transmission is equipped with a bypass valve that MUST be opened before manually moving the mower.

3. Perform the following to open the two hydrostatic transmission bypass valves:
   a. Loosen the two star knobs (e) securing the leg pad (f) to the mower. See Figure 2.
   b. Remove the leg pad from the mower.
   c. Remove the two star knobs (g) securing the rear panel (h) to the mower.

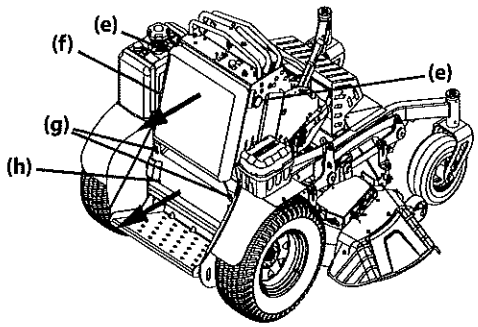

Figure 2

IMPORTANT: DO NOT open the bypass valves more than a maximum of two turns.

   d. Locate the hydrostatic transmissions and open the two bypass valves (i) a maximum of two turns. See Figure 3.
   e. Using the two star knobs, reinstall the rear panel.
   f. Using the two star knobs, reinstall the leg pad.

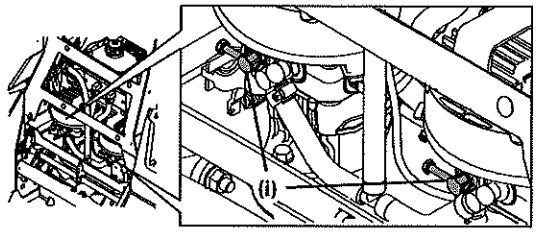

Figure 3

⚠ WARNING

Do not tow the mower, even with the bypass valves engaged. Serious transmission damage will result from doing so.

4. Carefully roll the mower off the shipping pallet.

IMPORTANT: The bypass valves MUST be closed before operating the mower.

5. Reverse STEP 3 to close the two bypass valves.
6. To engage the parking brake, pull back completely on the parking brake lever (j) See Figure 4.

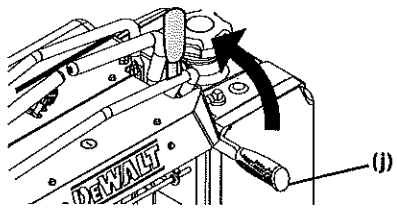

Figure 4

7. Cut any wire ties holding the chute deflector up and discard any packing material.

Lubrication & Grease Points

Before operating the mower, refer to the Product Care section of this manual to check the lubrication and grease points. Grease and lubricate if necessary.

Checking Tire Pressure

⚠ WARNING

For proper traction and deck leveling the maximum recommended tire pressure is 12 psi. Equal tire pressure should be maintained at all times. NEVER exceed the Maximum PSI noted on the tire side wall.

Inflation Pressure

Rear Tires — 10-12 psi (69-82.7 kPa) max recommended operating pressure.

Front Tires — N/A - Front tires are semi pneumatic and do not require inflation.

The tires on the mower may be over-inflated for shipping purposes. Reduce the tire pressure before operating the mower. Recommended operating tire pressure is 10-12 psi (69-82.7 kPa) for rear tires.

ADJUSTMENTS

Connecting the Battery Cables

⚠ WARNING

California PROPOSITION 65 Battery posts, terminals, and related accessories contain lead and lead compounds, chemicals known to the State of California to cause cancer and reproductive harm. Wash hands after handling.

⚠ WARNING

When attaching battery cables, always connect the POSITIVE (Red) wire to its terminal first, followed by the NEGATIVE (Black) wire.

For shipping reasons, both battery cables on your equipment may have been left disconnected from the terminals at the factory. To connect the battery cables, proceed as follows:

1. Release the two latches securing the battery cover (a) to the battery box (b) and remove the battery box lid (c). See Figure 5.

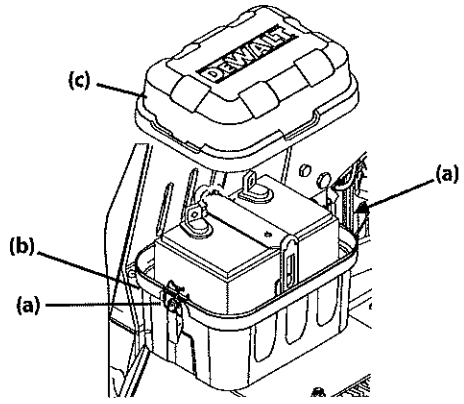

Figure 5

NOTE: The positive battery terminal is marked POS. (+) (d). The negative battery terminal is marked NEG. (–) (e).

NOTE: If the positive battery cable (f) is already attached, skip ahead to step 4.

2. Remove the red boot (g), if present, from the positive battery terminal (d) and attach the red cable (f) to the positive battery terminal (d) with the hex cap screw (h) and sems nut (i).

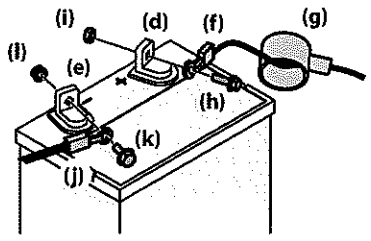

Figure 6

3. Position the red boot (g) over the positive battery terminal (d) to insulate it and help protect it from corrosion.
4. Attach the black cable (j) to the negative battery terminal (e) with the hex cap screw (k) and sems nut (l).
5. Reverse STEP 1 to reinstall the battery cover to the battery box.

Note: If the battery is put into service after the date shown on top/side of battery, charge the battery prior to operating the machine.

BATTERY MAINTENANCE

- The battery is filled with battery acid and then sealed at the factory. However, even a "maintenance free" battery requires some maintenance to ensure its proper life cycle.
- Spray the terminals and exposed wire with a battery terminal sealer, or coat the terminals with a thin coat of grease or petroleum jelly, to protect against corrosion.
- Always keep the battery cables and terminals clean and free of corrosion.
- Avoid tipping. Even a sealed battery will leak electrolyte when tipped.

BATTERY STORAGE

- When storing the tractor for extended periods, disconnect the negative battery cable. It is not necessary to remove the battery.
- All batteries discharge during storage. Keep the exterior of the battery clean, especially the top. A dirty battery will discharge more rapidly.
- The battery must be stored with a full charge. A discharged battery can freeze sooner than a charged battery. A fully charged battery will store longer in cold temperatures than hot.
- Recharge the battery before returning to service. Although the tractor may start, the engine charging system may not fully recharge the battery.

Adjustments

LEG PAD HEIGHT

1. Loosen the two star knobs (a) securing the leg pad (b) to the mower. See Figure 7.
2. Remove the leg pad from the mower.
3. Reposition the leg pad into one of three height positions (c).
4. Using the two star knobs, secure the leg pad to the mower.

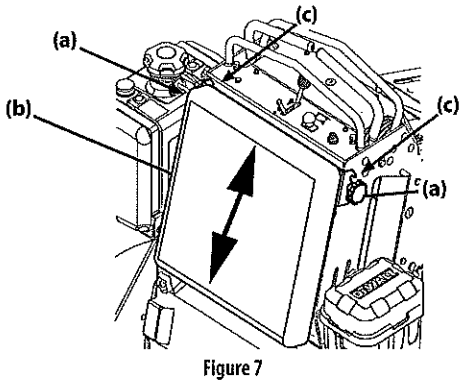

Figure 7