ASSEMBLY INSTRUCTION
RECLINING LOVE SEAT

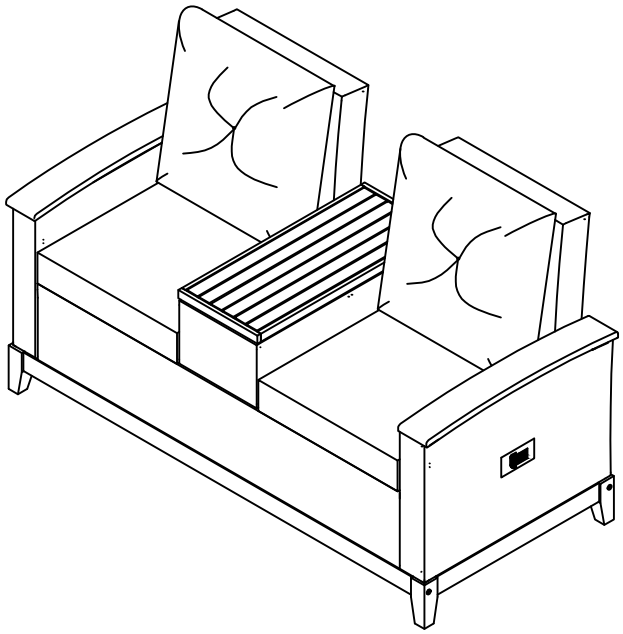

WF301640; WF301641; WF301642

Notice

1. **50% Tighten before fixings all screws, Allen wrench is recommended instead of an electric drill.**
2. **Place the item on a flat ground to adjust and make sure it remains stable.**
3. **Tighten up all screws with tools gradually.**
4. **If the screws are not aligned with holes during assembly, please loosen all all the other screws to 50% and continue the assembly process.**
5. **If the item is not stable, please loosen all the screws, adjust it on a flat ground and tighten up all screws again.**
6. **Note: If one or more screws are fully tightened during assembly, chances are the others will not be aligned with holes. In addition, all the holes are disigned to be relatively larger to provide more space for the adjustment of the screws.**

1. Thank you for choosing our products.

2. Return Policy

DO NOT RETURN TO THE STORE! Skip the process of returning your product and contact us directly for a replacement

If you find that parts of your order are missing or damaged, we will gladly ship any needed replacement parts free of charge.

If your product's quality does not meet your expectations or you have found any sort of defect, please contact our customer service department and let us know the details of your order and any issues encountered, we will try our best to provide you with a solution. Feel free to also directly contact our manufacturer concerning needed replacement parts and they will be happy to help provide you with a solution or answer any questions you may have.

Recommendations Before Beginning Assembly

- Read instructions, cover to cover
- Have 2-4 adults on hand for assembly depending on product size
- Do not assemble directly on flooring or carpet
- Assemble on a clean non-marring surface (example: packing foam)
- Save all packaging until finished

3. Assembly Notice:

- If you encounter any problems during assembly and find that you cannot continue, rest assured we will help you solve the situation as soon as possible. Simply keep all of the

parts of the product stored in a safe place and contact us immediately so we may assist you further.

- Once you have opened your package, remove all inner hardware packages and take the parts out. One by one, Place the parts out neatly in front of you, then refer to the instructions to ensure no parts are missing. If any pieces are found missing, please carefully look in the box first, as the hardware packaging might have torn making the hardware spill in the box.
- Some key parts of your product may be stored and hidden inside of other parts. Please open any zippered or hook & loop storage compartments to remove all parts. (example: cushions and legs being stored in the underside of a sofa)
- IMPORTANT: When setting up your product, DO NOT INSTALL THE SCREWS ALL THE WAY IN THE BEGINNING. Place each screw into their proper hole and use your hand to twist the screw halfway. Twist all the screws in halfway to ensure the holes will match up properly and the product is level on the ground. When everything seems fitted, then tighten the screws.
- When you have completed assembly, we suggest you have more than one person to assist you with lifting and placing the product.

Care & Maintenance

- Do not put hot items directly on furniture surface
- Do not clean furniture with harsh cleansers or polish
- Do not place furniture near heating or cooling vents
- Do not write on furniture without a padded barrier to protect the surface
- Not for commercial use. For residential use only
- Stains may be removed with mild soap solution and damp cloth
- Children should not climb or jump on the furniture
- Dust and pick-up spills using a clean, non-colored, lint-free cloth

Caution

●This product contains small components. Please ensure that they are kept away from small children.

●Do not use power tools to assemble your furniture. Power tools may strip or damage the parts.

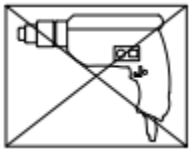

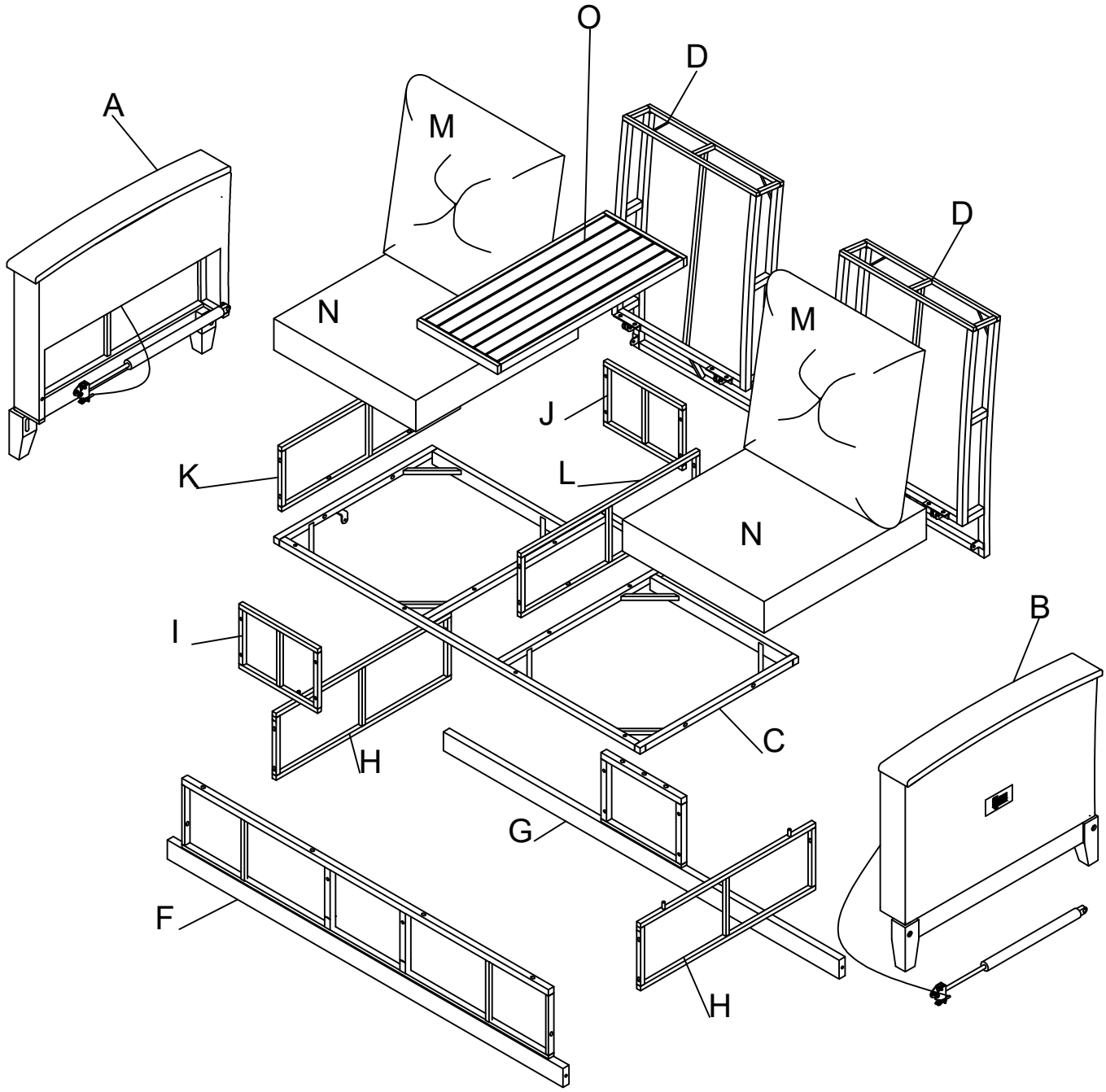
O
D
A
M
D
N
M
J
K
L
N
B
I
C
H
G
F
H

A

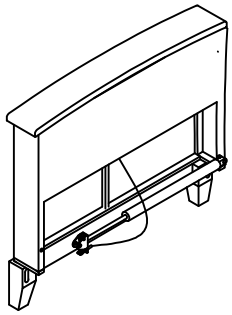

1 pc

B

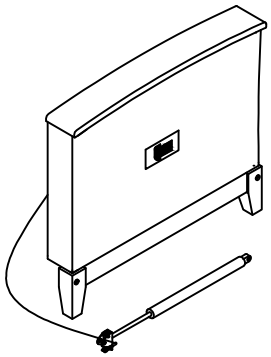

1 pc

C

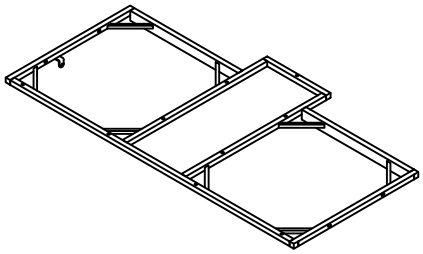

1 pc

D

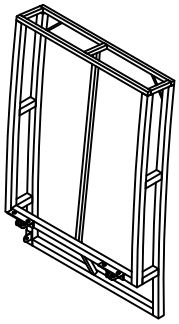

2 pcs

F

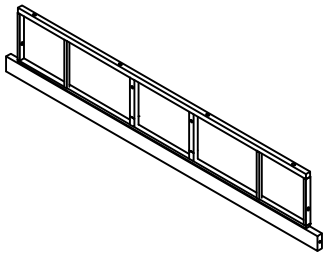

1 pc

G

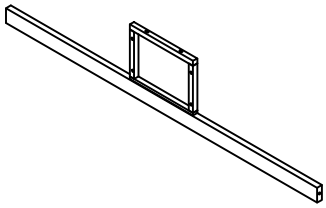

1 pc

H

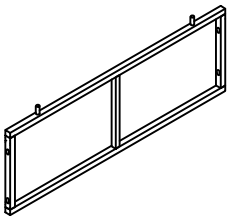

2 pcs

I

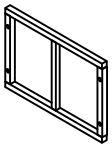

1 pc

J

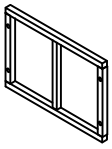

1 pc

K

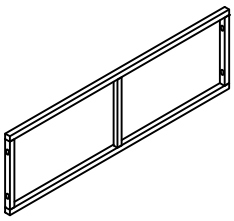

1 pc

L

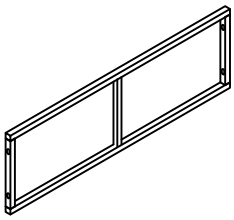

1 pc

M

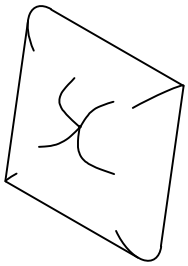

2 pcs

N

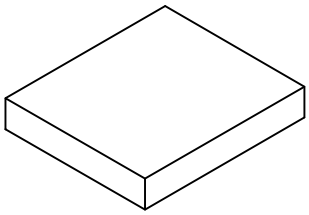

2 pcs

O

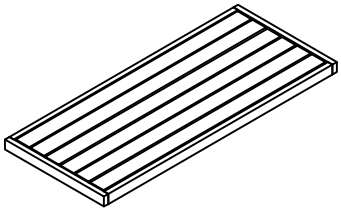

1 pc

1

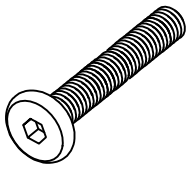

Bolt M6x80 mm
(4 pcs)+extra 1 pc

2

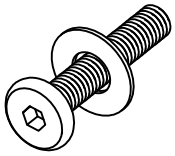

Bolt M6x40 mm
(14 pcs)+extra 2 pcs

3

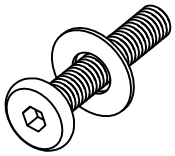

Bolt M6x35 mm
(22 pcs)+extra 2 pcs

4

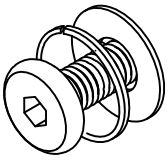

Bolt M6x20 mm
(8 pcs)+extra 1 pc

5

Bolt M6x15 mm
(8 pcs)+extra 1 pc

6

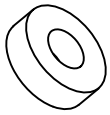

Plastic washer
(6 pcs)+extra 1 pc

7

Nut M6
(4 pcs)+extra 1 pc

8

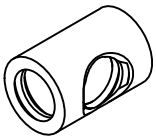

4 pcs+ extra 1 pc

9

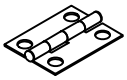

Hinge
(2 pcs)

10

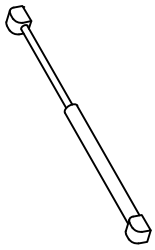

Gas spring (1 pc)

11

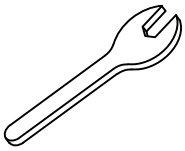

Spanner (1 pc)

12

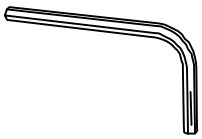

Allen key M4
(2 pcs)

13

WF 301640

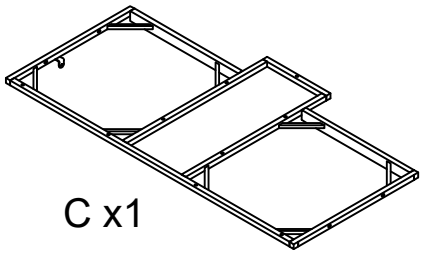

C x1

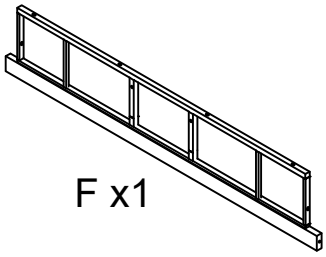

F x1

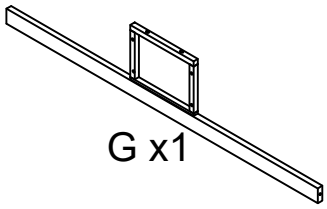

G x1

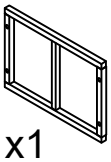

J x1

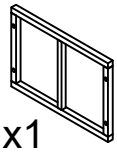

I x1

WF 301641

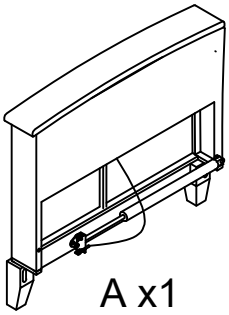

A x1

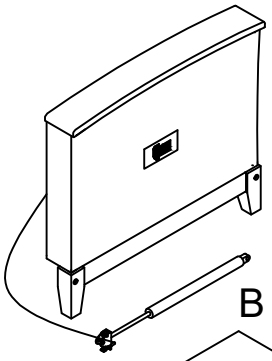

B x1

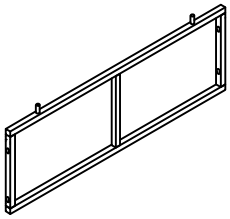

H x2

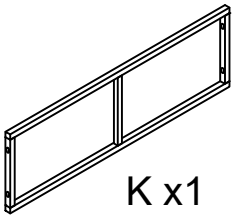

K x1

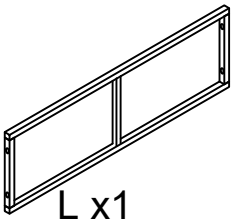

L x1

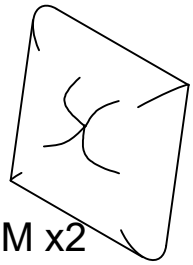

M x2

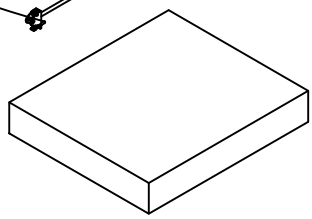

N x2

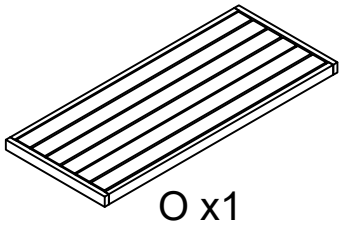

O x1

HARDWARE

WF 301642

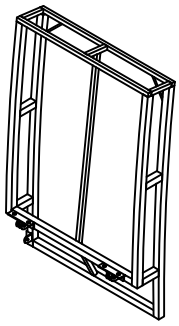

D x2

Step 1

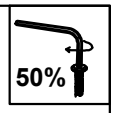

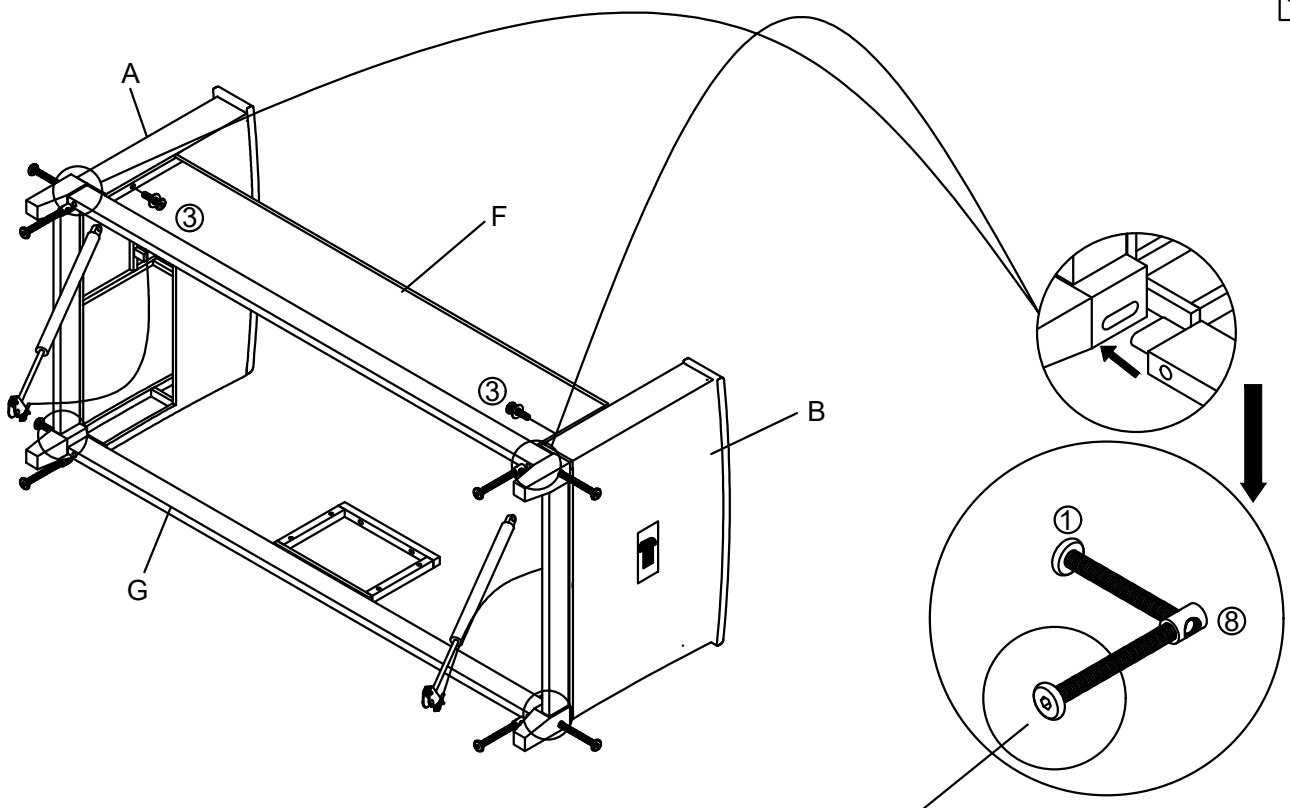

This is to assist①and⑧,
you need to take it out after turning①and⑧, four steps are the same.
(accessory part is added to hardware)

①x4	③x2	⑧x4

Step 2

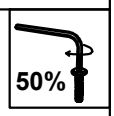

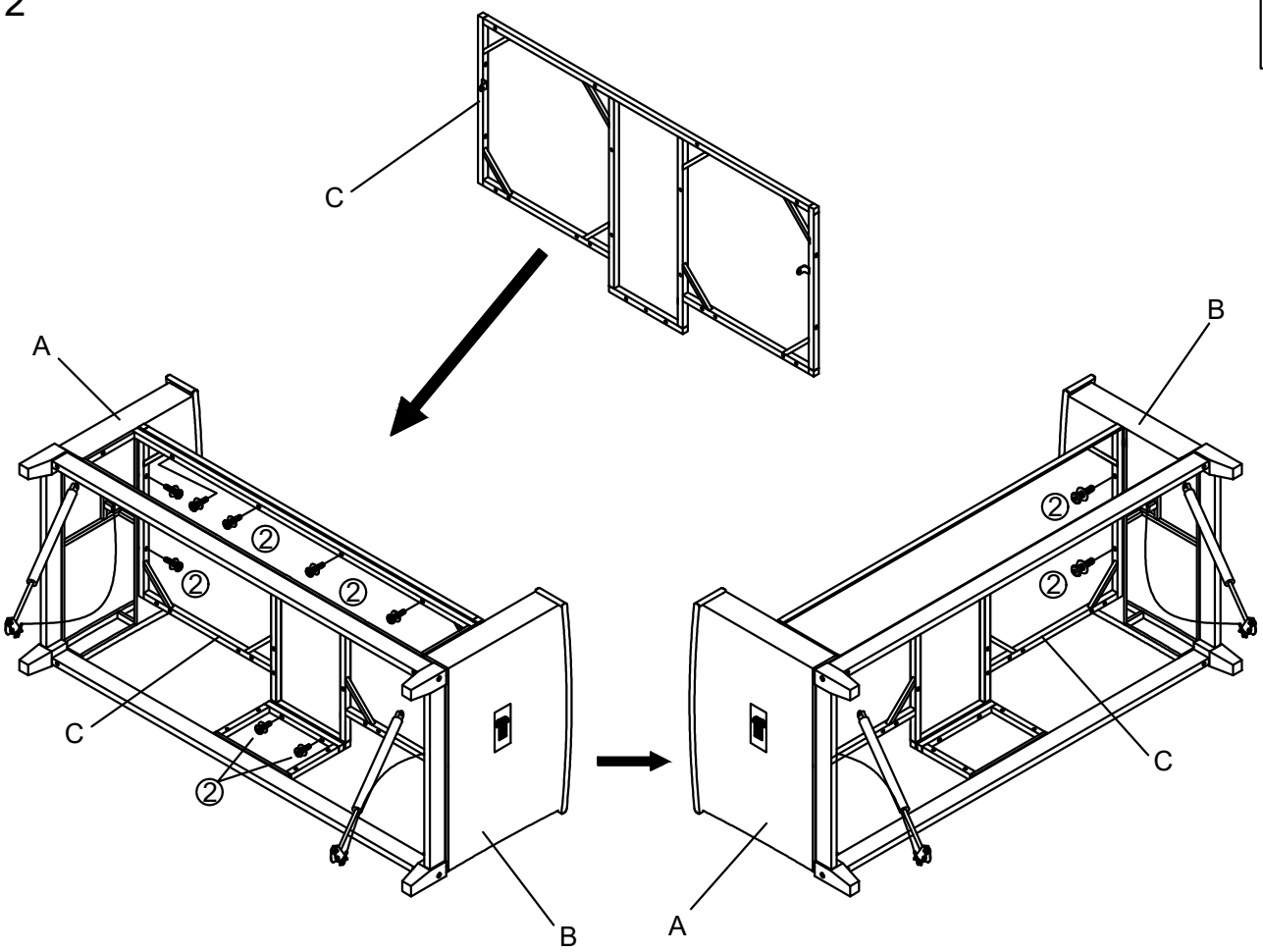

②x10

Step 3

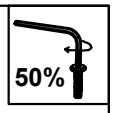

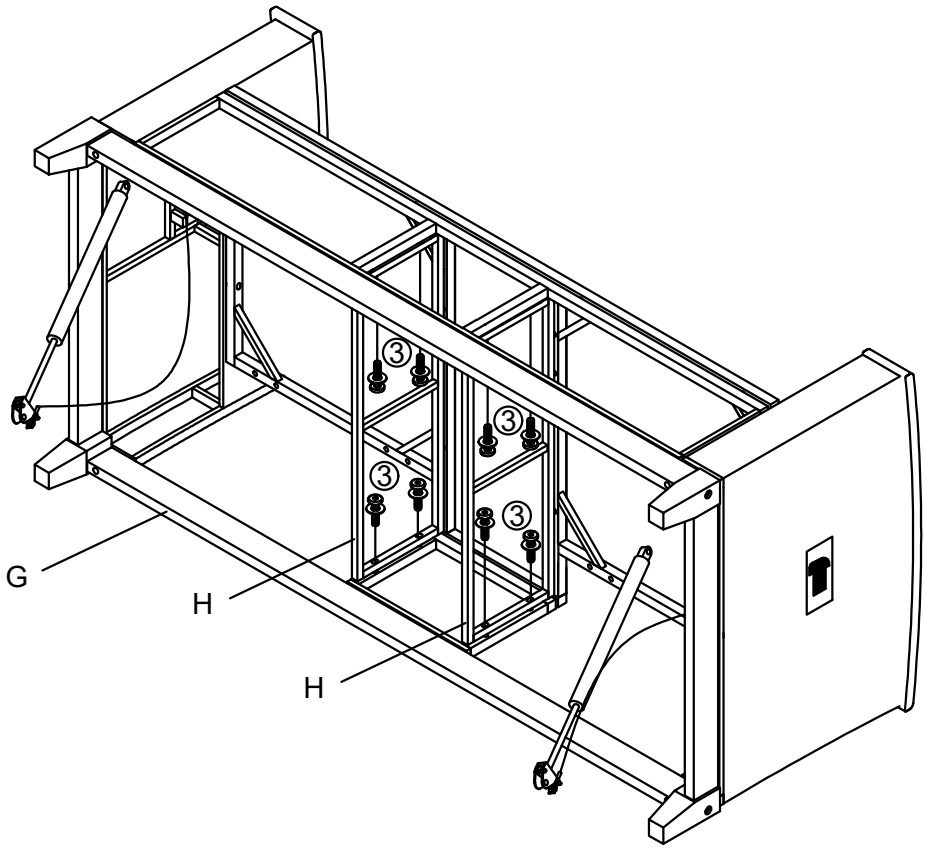

③ x8

Step 4

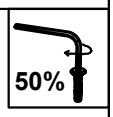

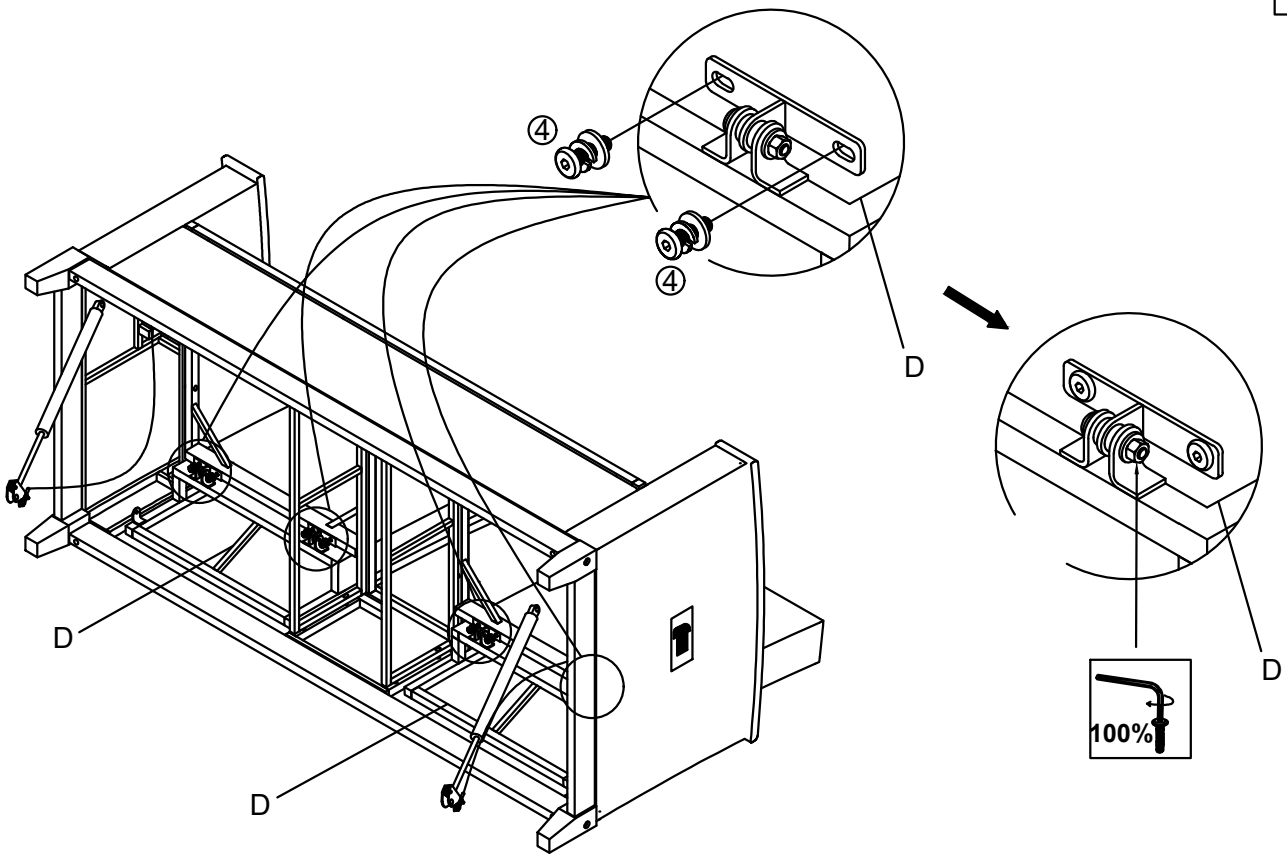

④ x8

Step 5

50%

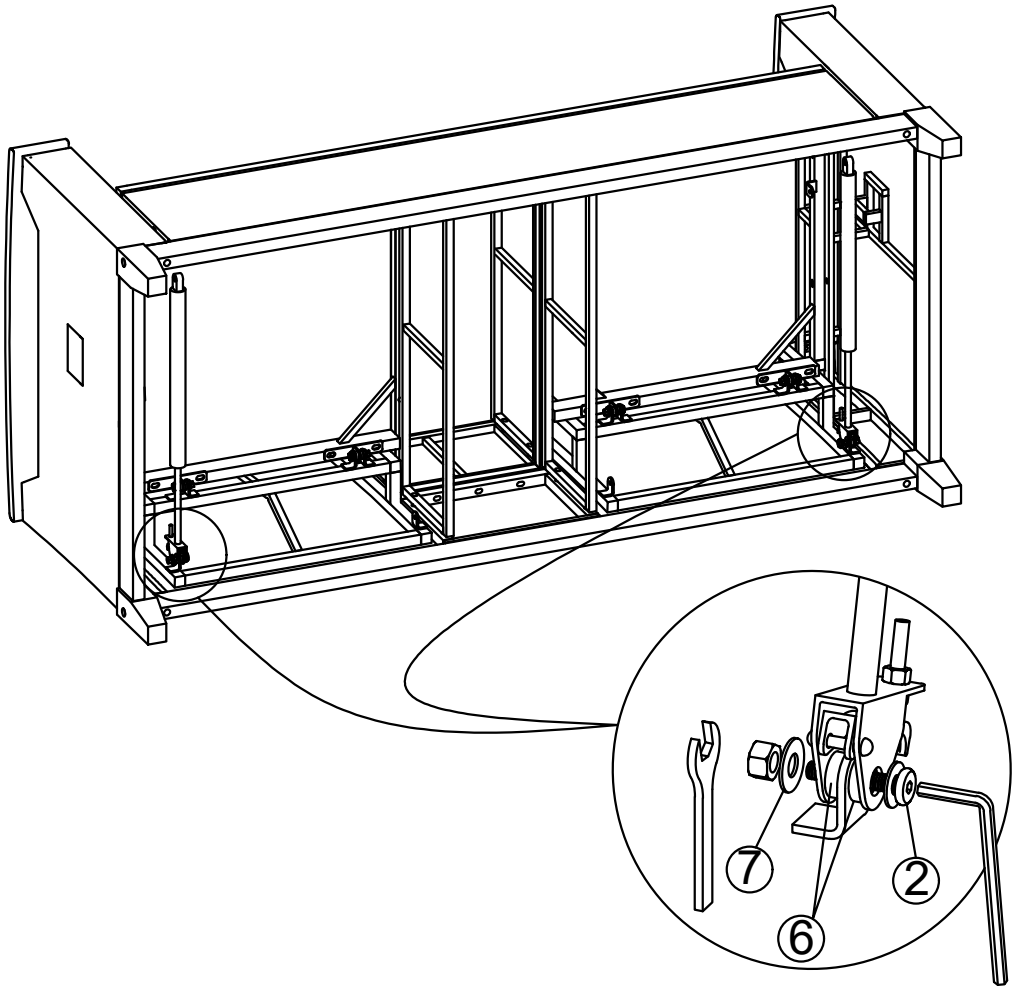

② x 2	⑥ x 4	⑦ x 2

Step 6

50%

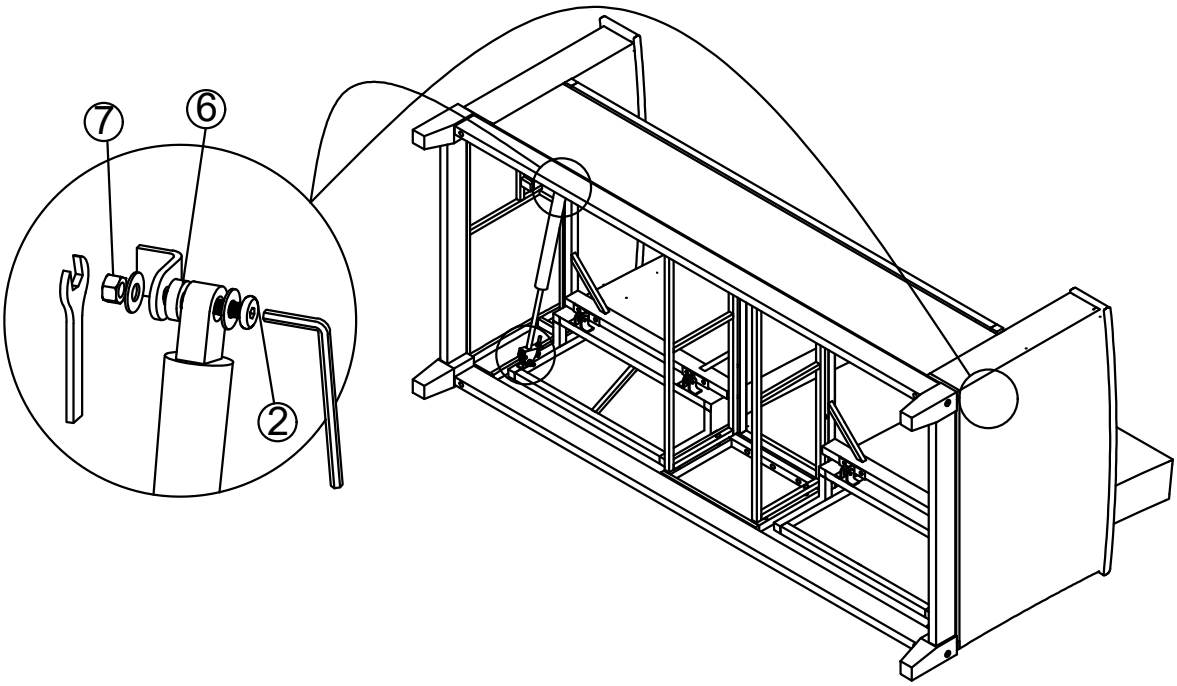

② x 2	⑥ x 2	⑦ x 2

Step 7

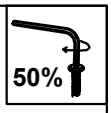

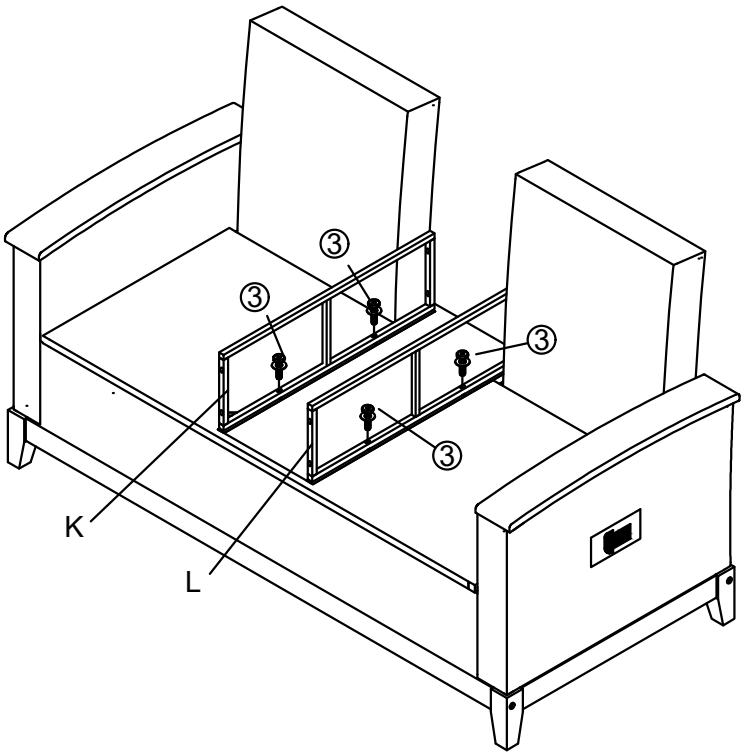

③ x 4

Step 8

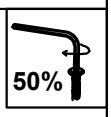

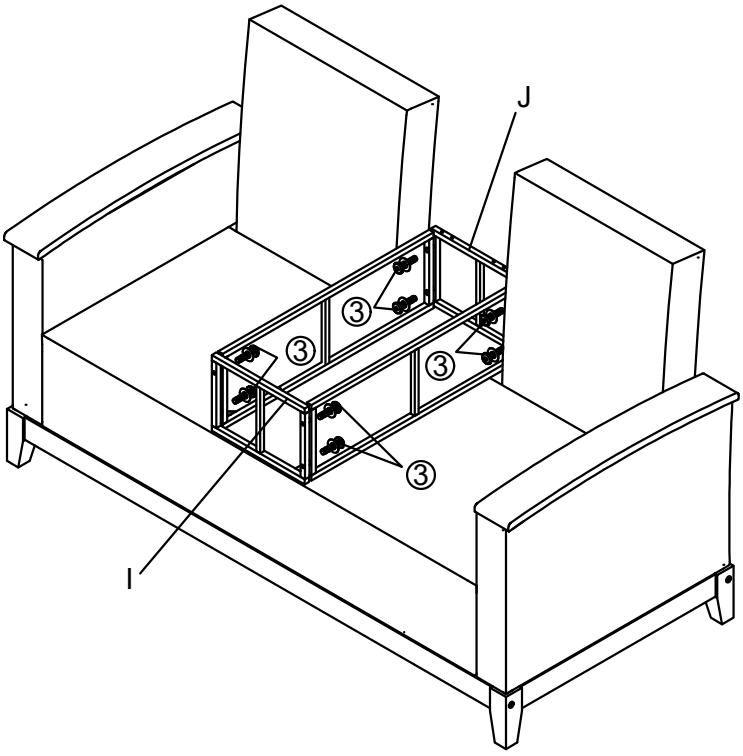

③ x 8

Step 9

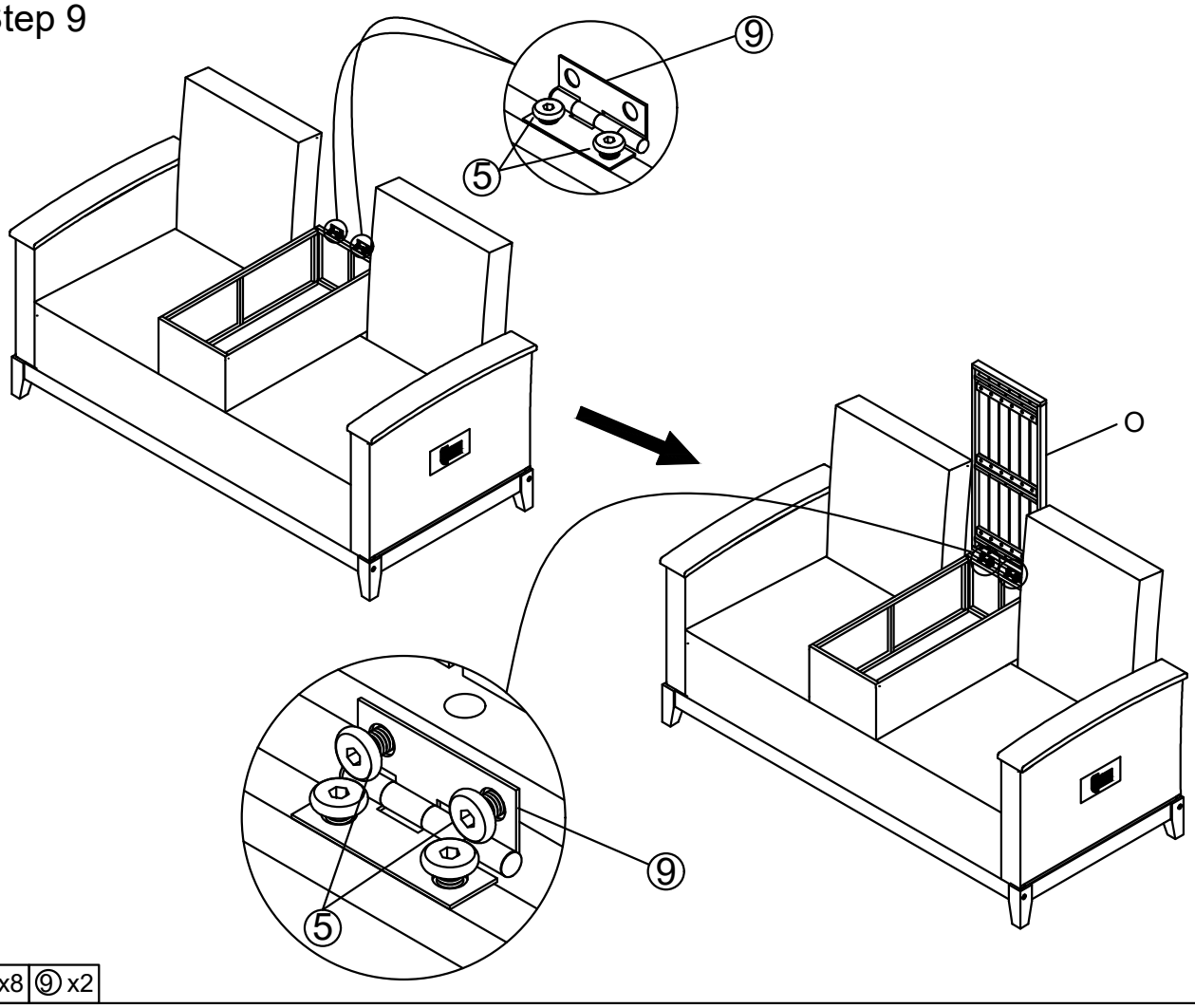

50%

⑤ x8 | ⑨ x2

Step 10

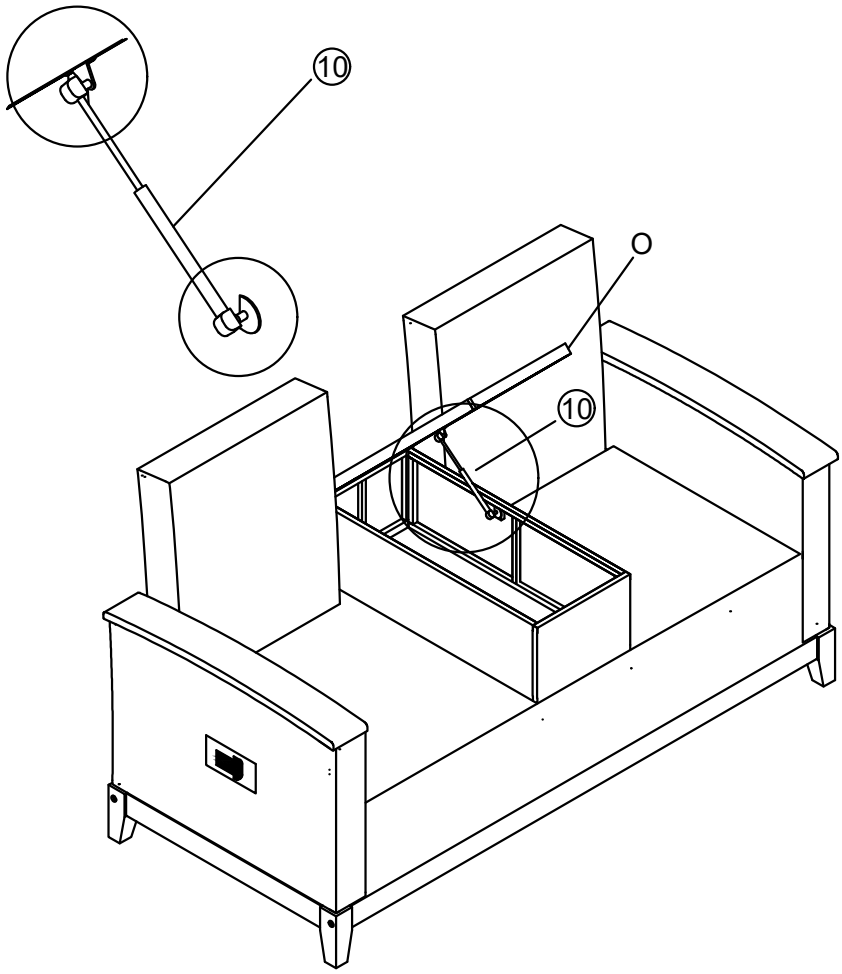

100%

⑩ x1

Step 11

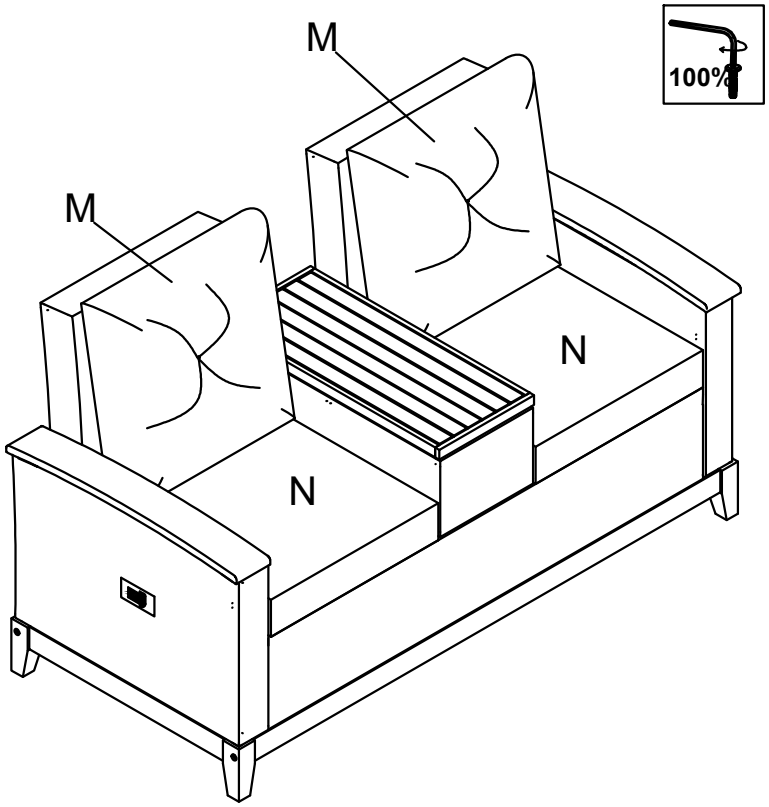
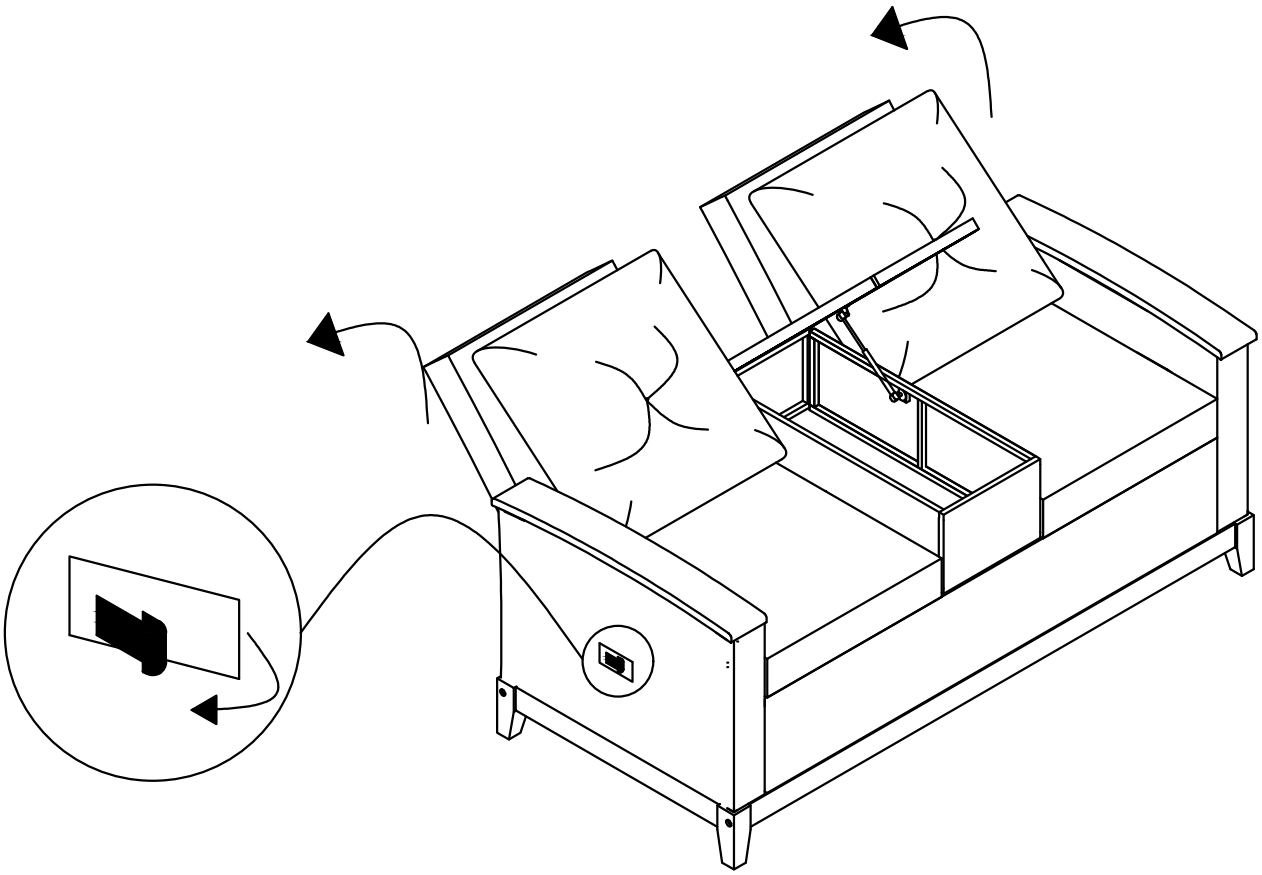
Step 12