WARRANTY

We strive to offer high-quality products, and we also try our best to satisfy each and every customer that orders from us with product or service as needed. We provide 30 days warranty starting from the time you receive the item. Each customer must provide a record of their order such as the order number, or item receipt for any items that are out of the warranty period you may also still receive replacement parts by purchasing them with our company if they are available.

Are you having difficulty

with assembly? Missing parts?

Please send email with your order No

customerservice@hulalahome.com

For return, Please check the return policy with the retailer or MarketPlace you bought from.

Appreciated your purchasing from us.

Pop up your life by our furniture piece!

HULALA

HOME

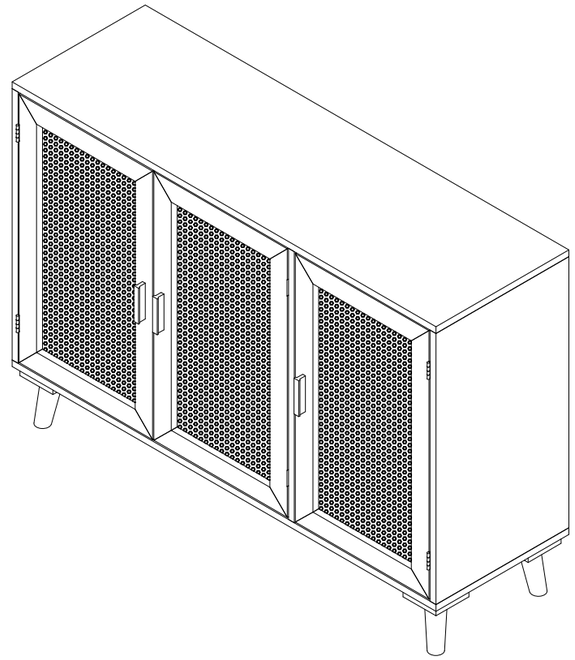

ITEM NO. HSCLS0408

NOTE:

This brochure contains IMPORTANT safty info. Please read and keep for future reference.

MAINTAINANCE AND WARNING

- Keep furniture away from heat.
- Do not clean furniture with harsh cleansers or polish. Do not use detergents, Solvents, abrasives, spray packs or leather cleaner. Use non-color mild soap with warm water clean spills(Mix 1:10 soap to water)
- Do not place furniture under direct sunlight, material will possibly fade over time.
- Do not use on site dry Cleaning machine.
- Children should not climb or jump on the furniture.
- Do not write on furniture without a padded barrier to protect the surface.
- Not for commercial use, For residential use only.



Weight Limitation

110LBS

PARTS LIST

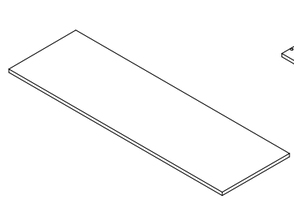

A: X1

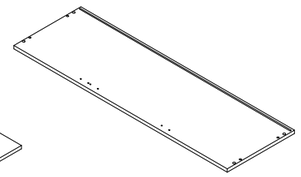

B: X1

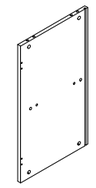

C: X1



D: X1

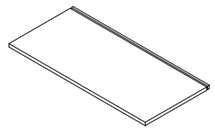

E: X1



F: X1

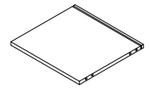

G: X1

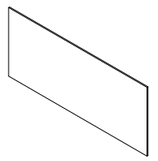

H: X2

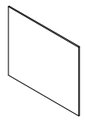

I: X2

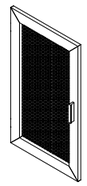

J: X1

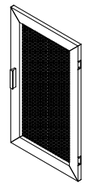

K: X2



L: X4

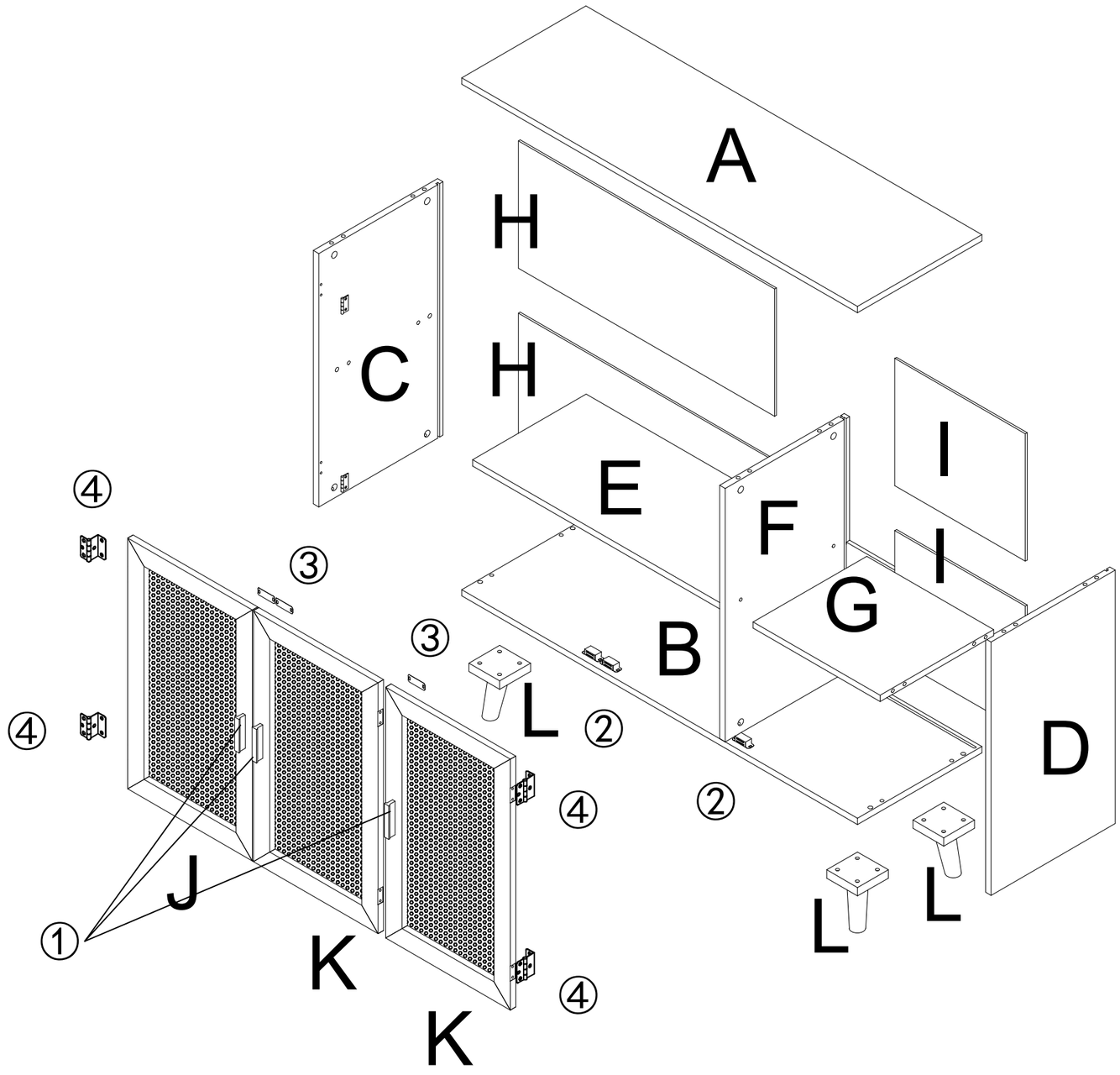

OVERVIEW

HARDWARE LIST



①:X3



②:X6
M3*10mm



③:X6
M3*10mm



④:X6



⑤:X36
M3*12mm



⑥:X16



⑦:X20



⑧:X20
Ø21mm

⑨:X20
Ø8*30mm



⑩:X16
M6*25mm



⑪: X1

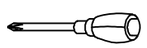

⑫: X1



⑬: X1



⑭: X2

SPARE



⑤:X1
M3*12mm

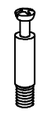

⑥:X1



⑦:X1



⑧:X1
Ø21mm

⑨:X1
Ø8*30mm



⑩:X1
M6*25mm



⑭: X1

Be sure to check all packing material carefully for small parts, which may have come loose inside the carton during shipment.

ASSEMBLY INSTRUCTIONS

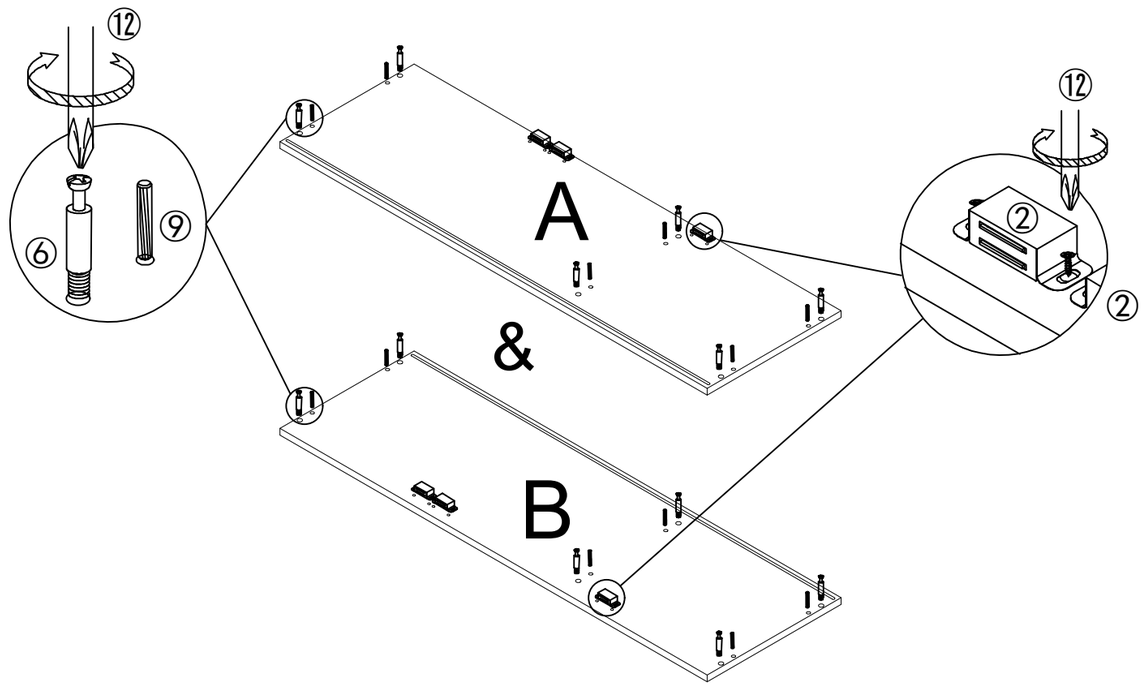

STEP 1, Preparation for panel A and B.
1.Insert wooden dowel#⑨into the predrilled hole in panel A and B by hand.
2.Align the hole in thepanel A and B,Screw in and tighern cam bolt #⑥ by the screwdriver⑫.
3.Attach the hardware parts#② to the panel A and B as the picture show.Align the hole in the part # ② to the hole in panel A and B,screw in and tighten the screw by scrwdriver.

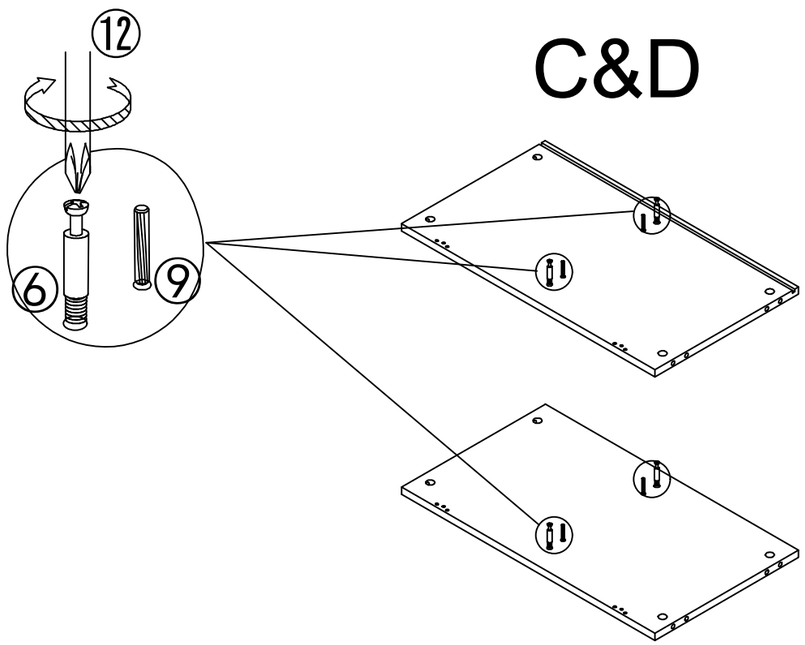

STEP 2,Preparation for panel C and D
1.Insert the wooden dowel #⑨ into the predrillde hole in panel C and D by hand;
2.Align the hole in the panel C and D,Screw in and tighteni cam bolt 6 by the screwdriver #⑫.

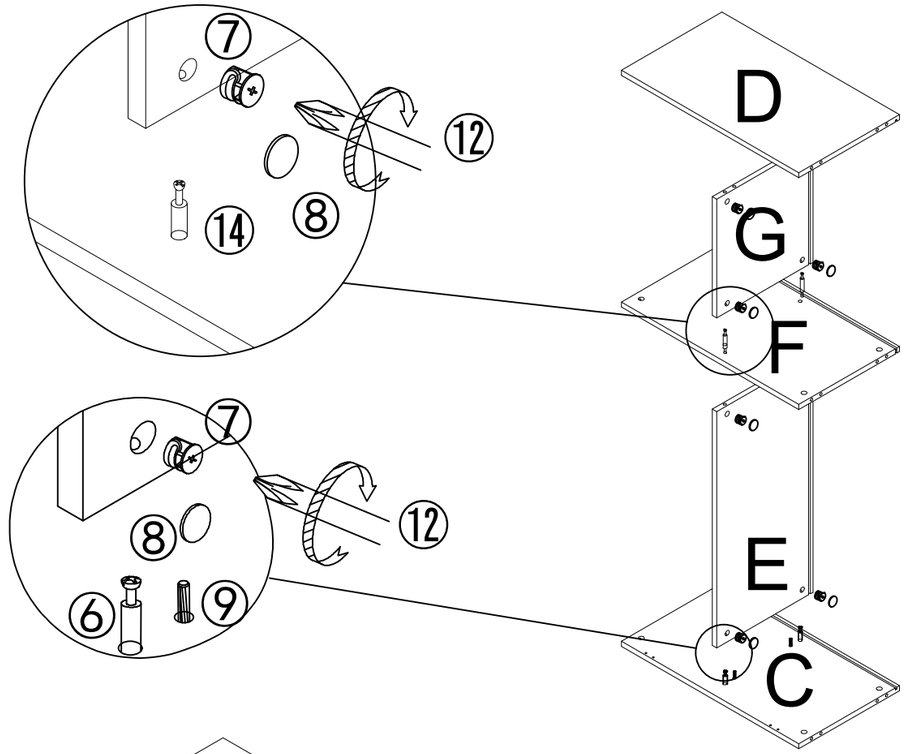

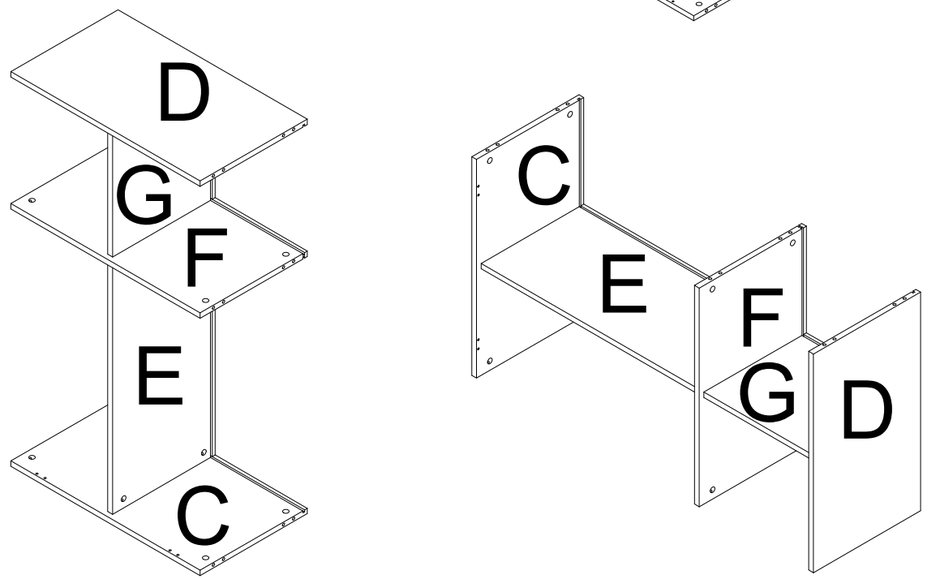

STEP 3,Assemble the panel C,D,E,F,G together.
Align the hole in the panel E and G,insert the cam bolt #⑥ on panel C,D,F into the holes, then put the nut #⑦ and tighten by screwdriver #⑫. Use sticker #⑧ to cover the cam nut.

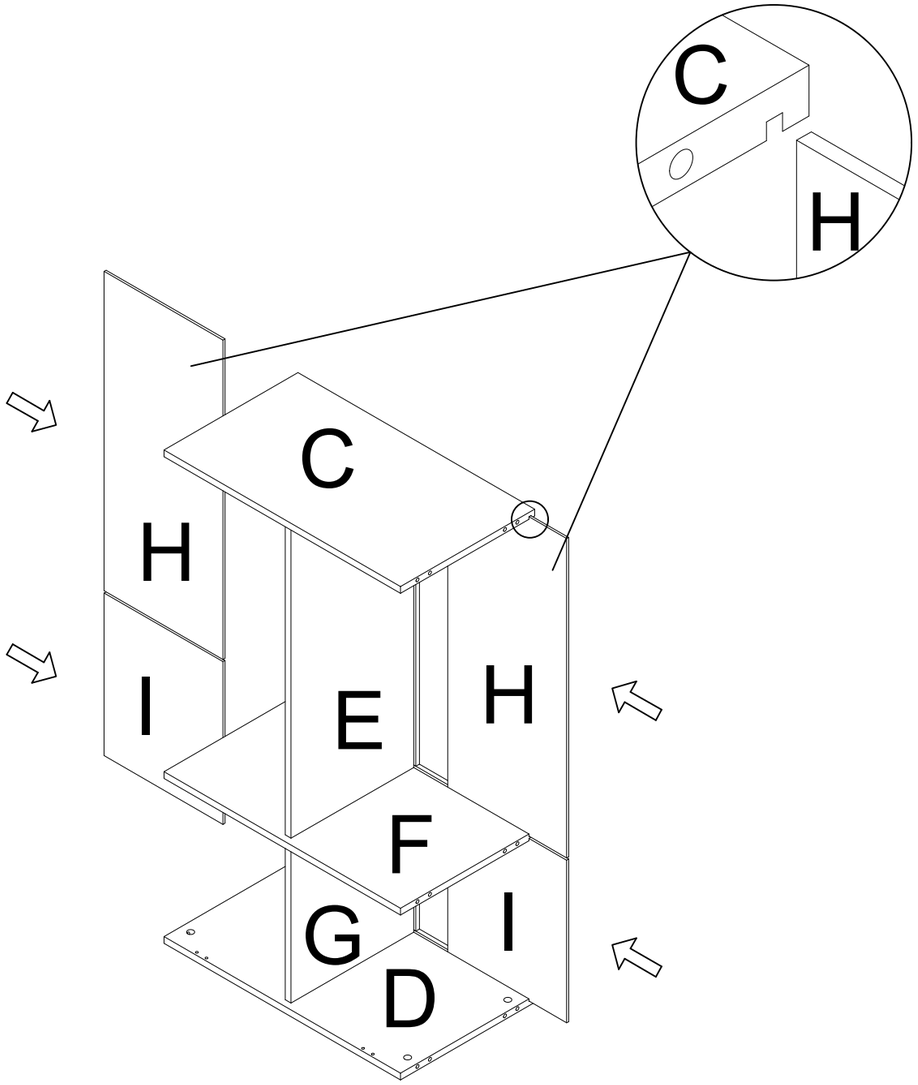

STEP 4, Slide the panel H and I into the groove in panel C, D,E,F and G .

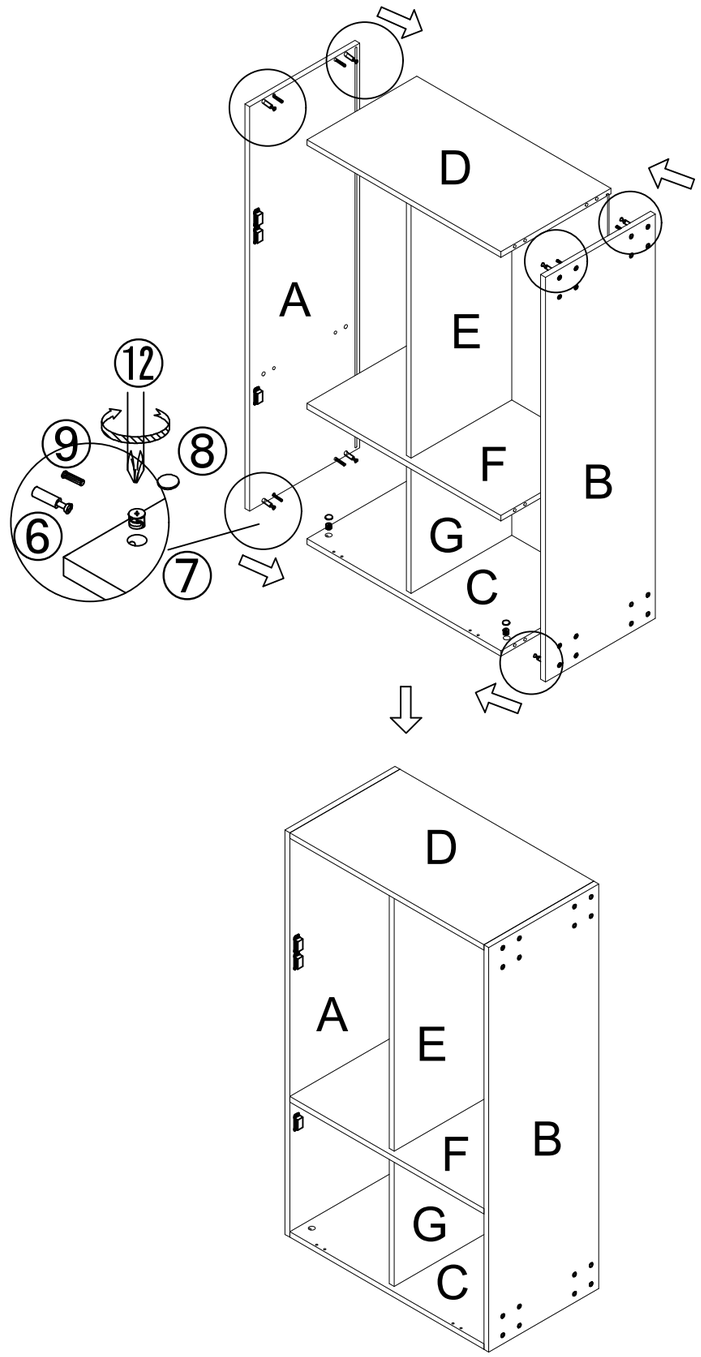

STEP 5, Connect the panel A and B to the frame finished in step 4.Align the hole in panel C,D,F,insert the cam bolt #⑥ and wooden dowel #⑨AT THE SAME TIME,then put the nut #⑦ and tighten by scewdriver #⑫.
Use sticker #⑧ to cover the cam nut.

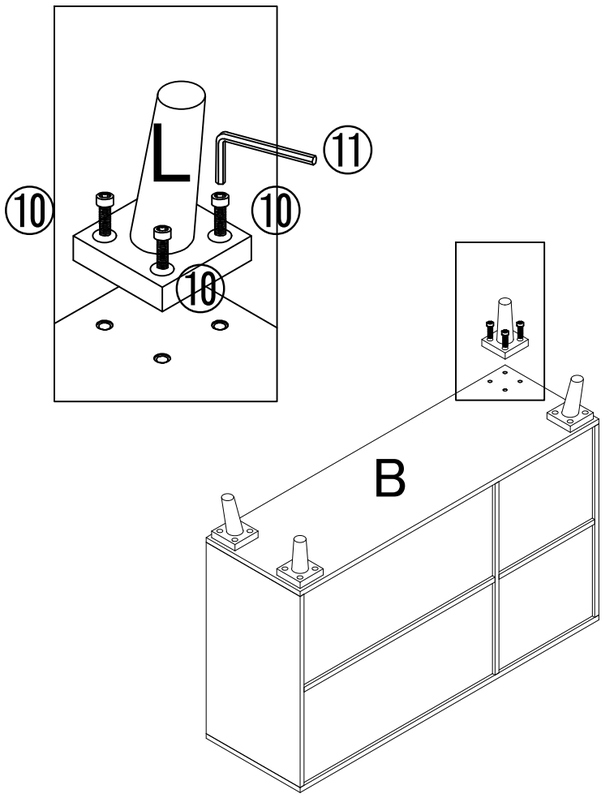

STEP 6,Attach the legs.Align the holes on the panel B
to the legs L,screw in and tighten the screw #⑩ by Allenkv#⑪.

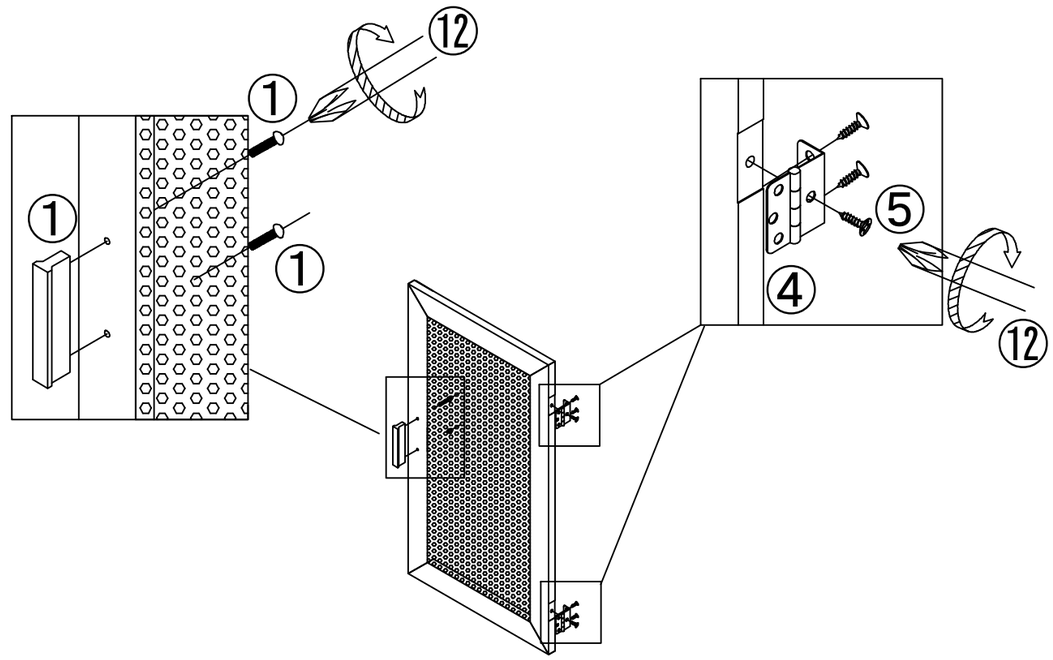

J & K

STEP 7,Preparing the panel J and K.
1.Align the hole on the puller #① to the hole in the panel J and K.
insert the screw #① and tighten by screwdriver #⑫.
2.Align the holes in hardware part #④, insert the screw
#⑤ into and tighten by screwdriver#⑫.

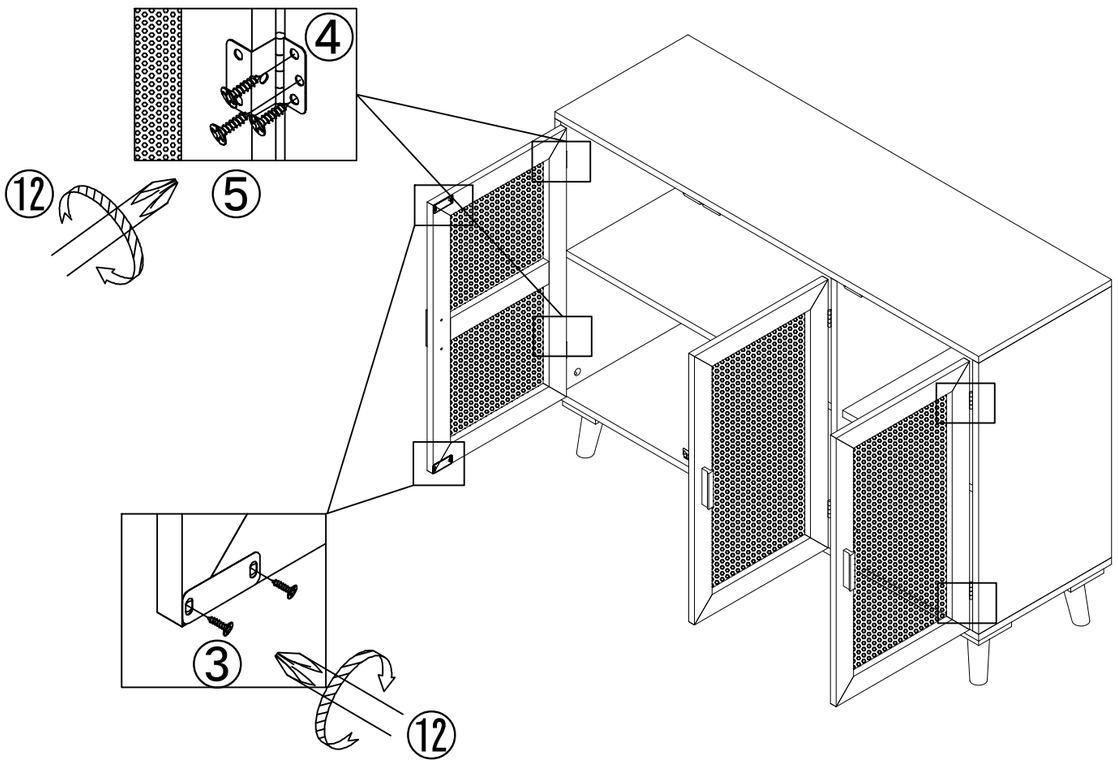

STEP 8, attach the panel J and K to the cabinet frame finished.
1.Align the hole in the hardware part #④ to the cabinet as the picture show.Screw in and tighten screw #⑤ by screwdriver#⑫.
2.Attaching the contactor in panel J and K as the picture show.

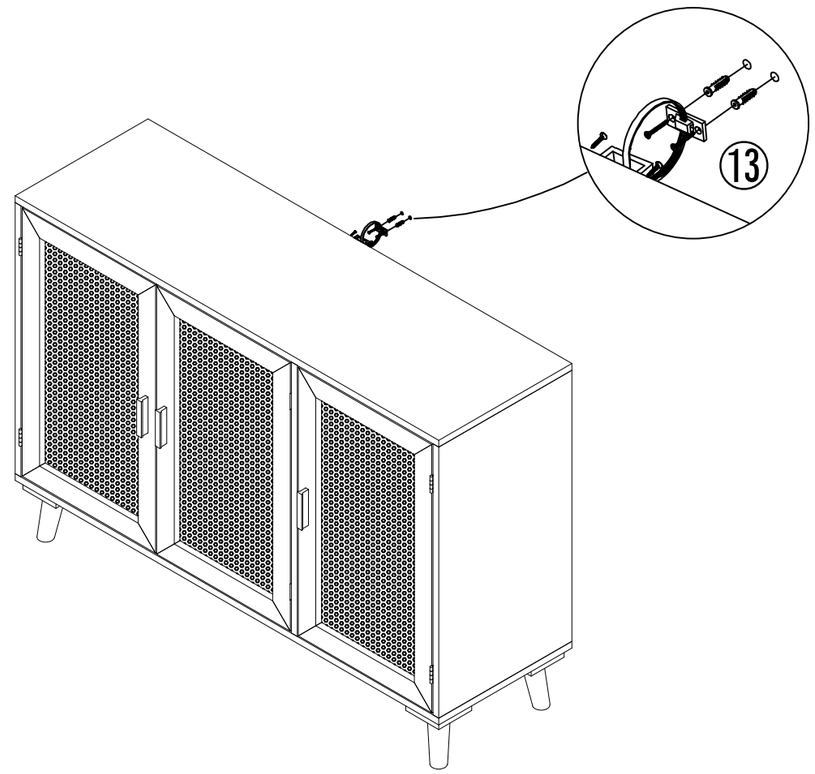

STEP 9, install the ANTI - COLLAPSE DEVICE.
1.Install the hardware #⑬ on the back of panel A, installing the same one and the same height on the wall.
2.Connect and tighten by pulling plastic belt to make security.
3.Now your cabinet is ready to use.