ASSEMBLY TIPS

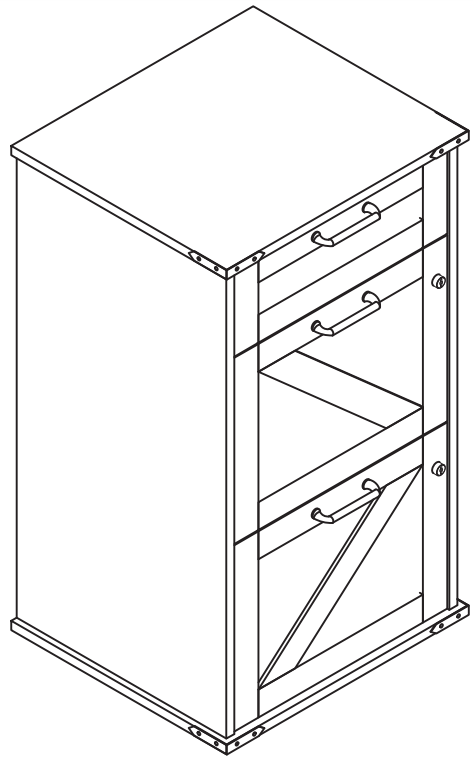

⚠ WARNING:

-Do not allow children to climb on unit

-Serious or fatal crushing injuries can occur from furniture tip-over. To prevent this furniture from tipping over, it must be permanently fixed to the wall. Fixing devices for the wall are not included since different wall materials require different types of fixing devices. Use fixing devices suitable for the walls in your home. For advice on suitable fixing systems, contact your local specialized dealer

-Avoid sharp objects or corrosive chemicals to prevent damage to the product

-During assembly, keep parts and packaging materials away from children and pets as there could be potential injury and choking hazards

Caution:

1. This product is designed for home use and not intended for commercial use.
2. This product contains small components.Please ensure that they are kept away from small children.
3. Be careful when using power tools to assemble your furniture.Power tools may strip or damage the parts.

IDENTIFY PARTS

One unit per box

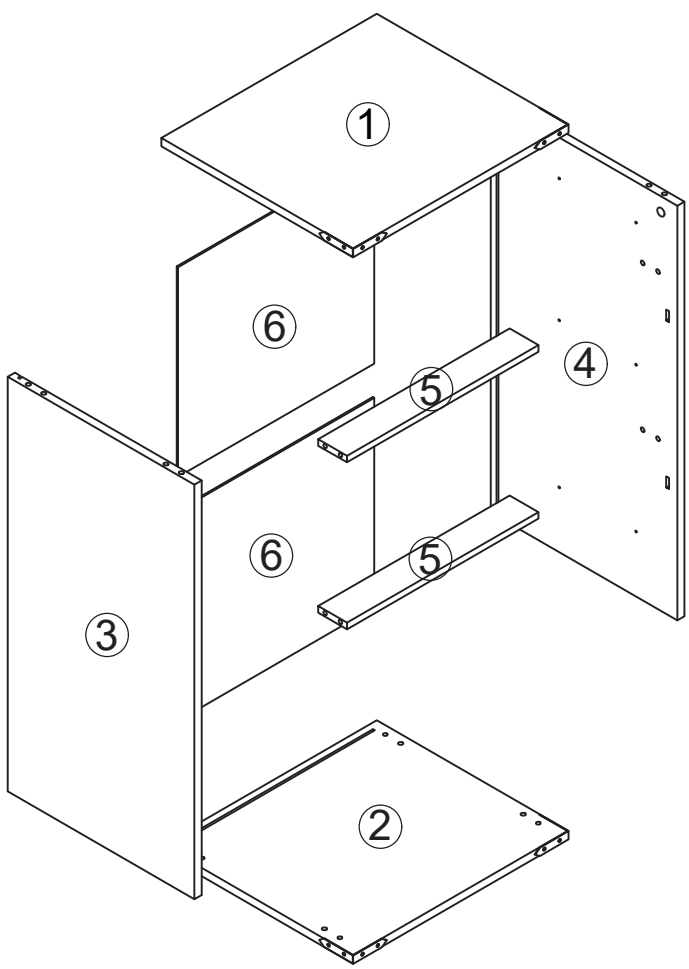

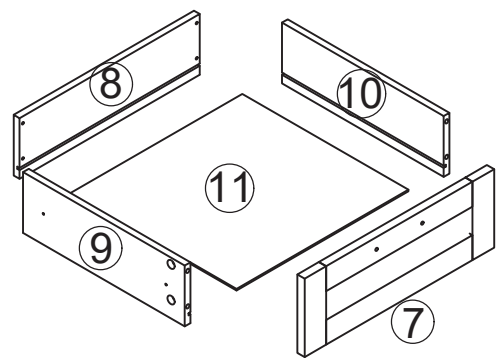

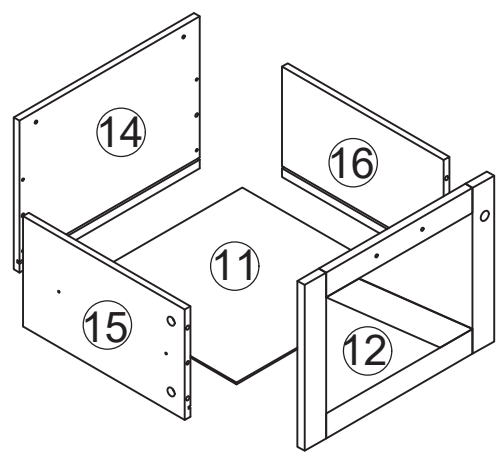

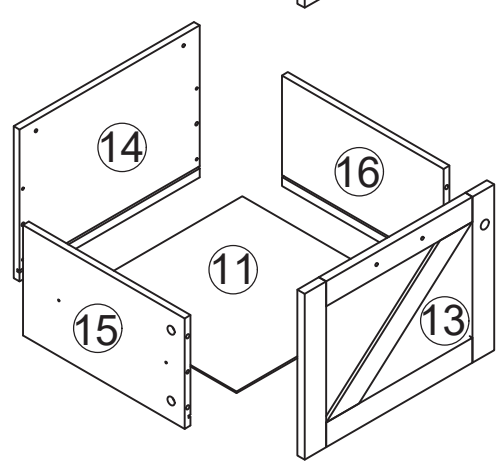

COMPONENTS

1

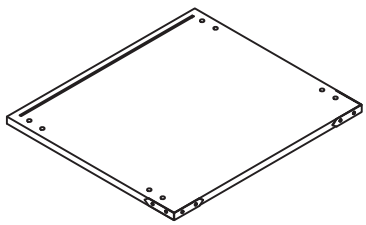

400x400x15mm

Top Panel x1

2

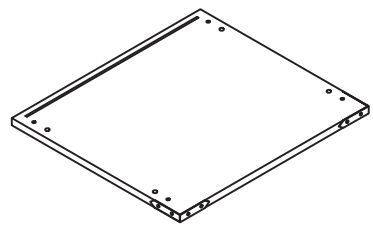

400x400x15mm

Bottom Panel x1

3

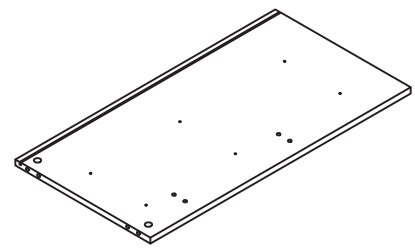

750x390x15mm

Left Side Panel x1

4

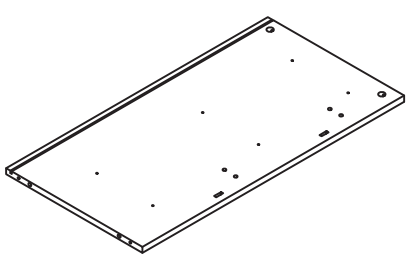

750x390x15mm

Right Side Panel x1

5

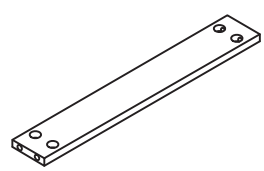

400x60x12mm

Cross Brace x2

6

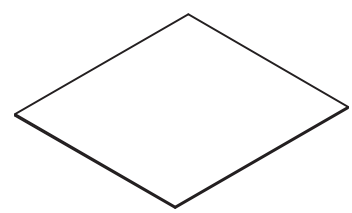

379x410x3mm

Back Panel x2

7

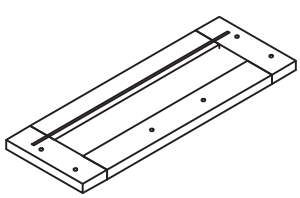

396x142x15mm

Drawer Front Panel x1

8

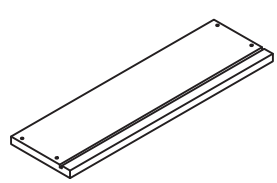

376x110x12mm

Drawer Back Panel x1

9

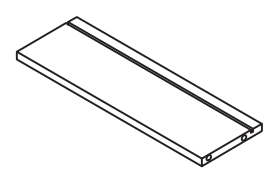

338x110x12mm

Drawer Left Panel x1

COMPONENTS

10

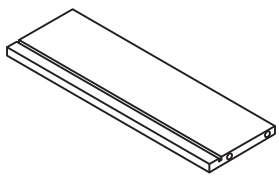

338x110x12mm

Drawer Right Panel x1

11

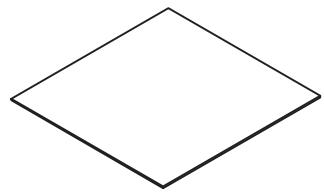

359x347x3mm

Drawer Bottom Panel x3

12

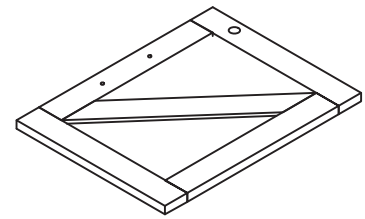

396x300x15mm

Drawer Front Panel x1

13

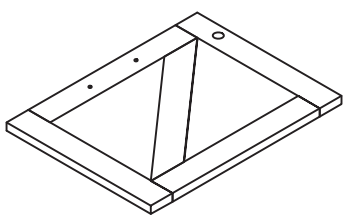

396x300x15mm

Drawer Front Panel x1

14

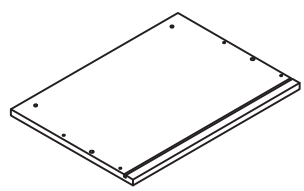

376x275x12mm

Drawer Back Panel x2

15

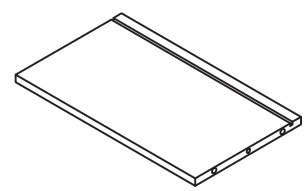

338x200x12mm

Drawer Left Panel x2

16

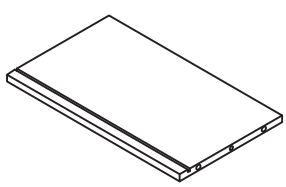

338x200x12mm

Drawer Right Panel x2

COMPONENTS

A

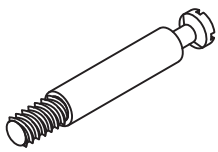

+2(spare)

M6x35mm

Cam Bolt x24

B

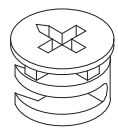

+2(spare)

M15x10mm

Cam Lock x24

C

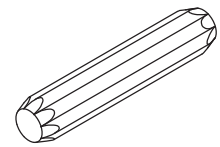

+1(spare)

M8*40mm

Wood Dowel x8

D

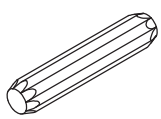

+1(spare)

M6*30mm

Wood Dowel x8

E

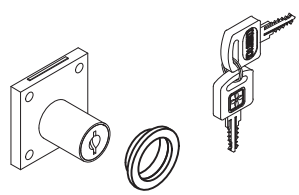

Lock & Keys x2

F



+2(spare)

M3.5x12mm

Screw x24

G



+1(spare)

M3.5x16mm

Screw x8

H

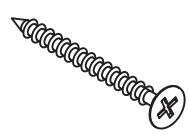

+1(spare)

M3.5x30mm

Screw x12

I

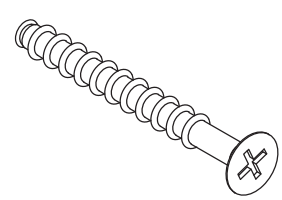

+1(spare)

M7x50mm

Screw x4

J

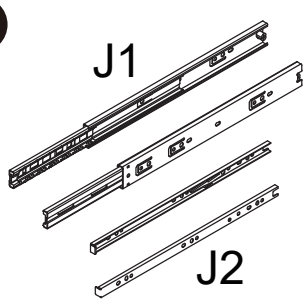

350mm

Drawer Rail x3

K

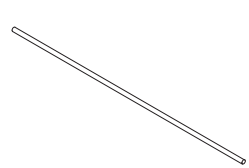

346mm

Hanging Rod x4

L

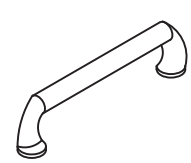

Drawer Handle x3

COMPONENTS

M



M4x19mm

Handle Screw x6

N



Foot Peg x4

O



Mending Wedge x6

P



M3x12mm

Screw x6

Q

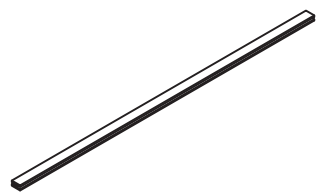

398mm

Back Panel Seam Strip x1

R

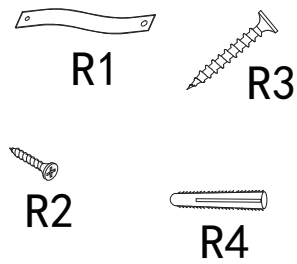

Anti-tipping Kit x1

"A & B" Hardware installation example

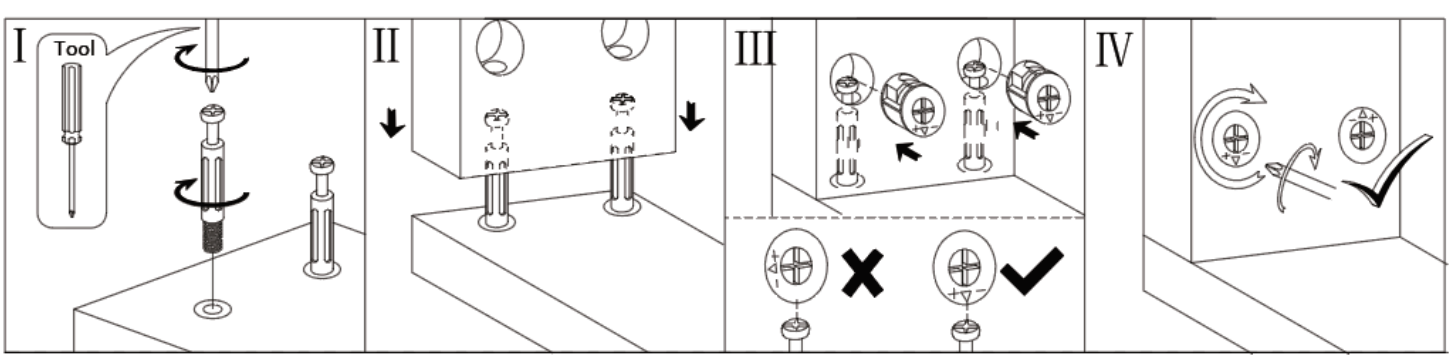

ASSEBMLY STEPS

A x 12		F x 12	 M3.5*12mm	J1 x 3	

STEP 1

1.Fix rail (J1) on the panel (3) (4) with screws (F).
2.Fix cam bolt (A) on panel (1).

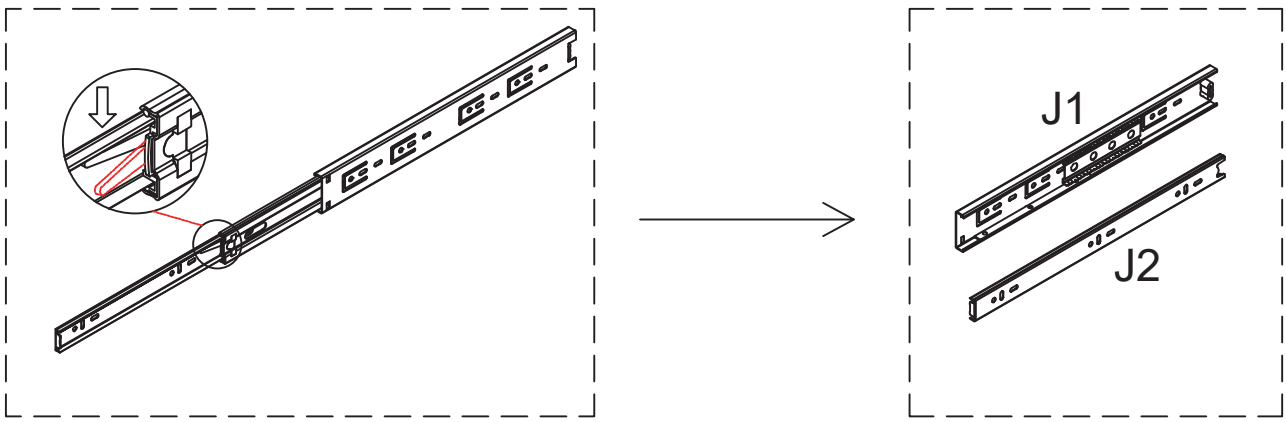

The guide rail is undivided into left and right sides.

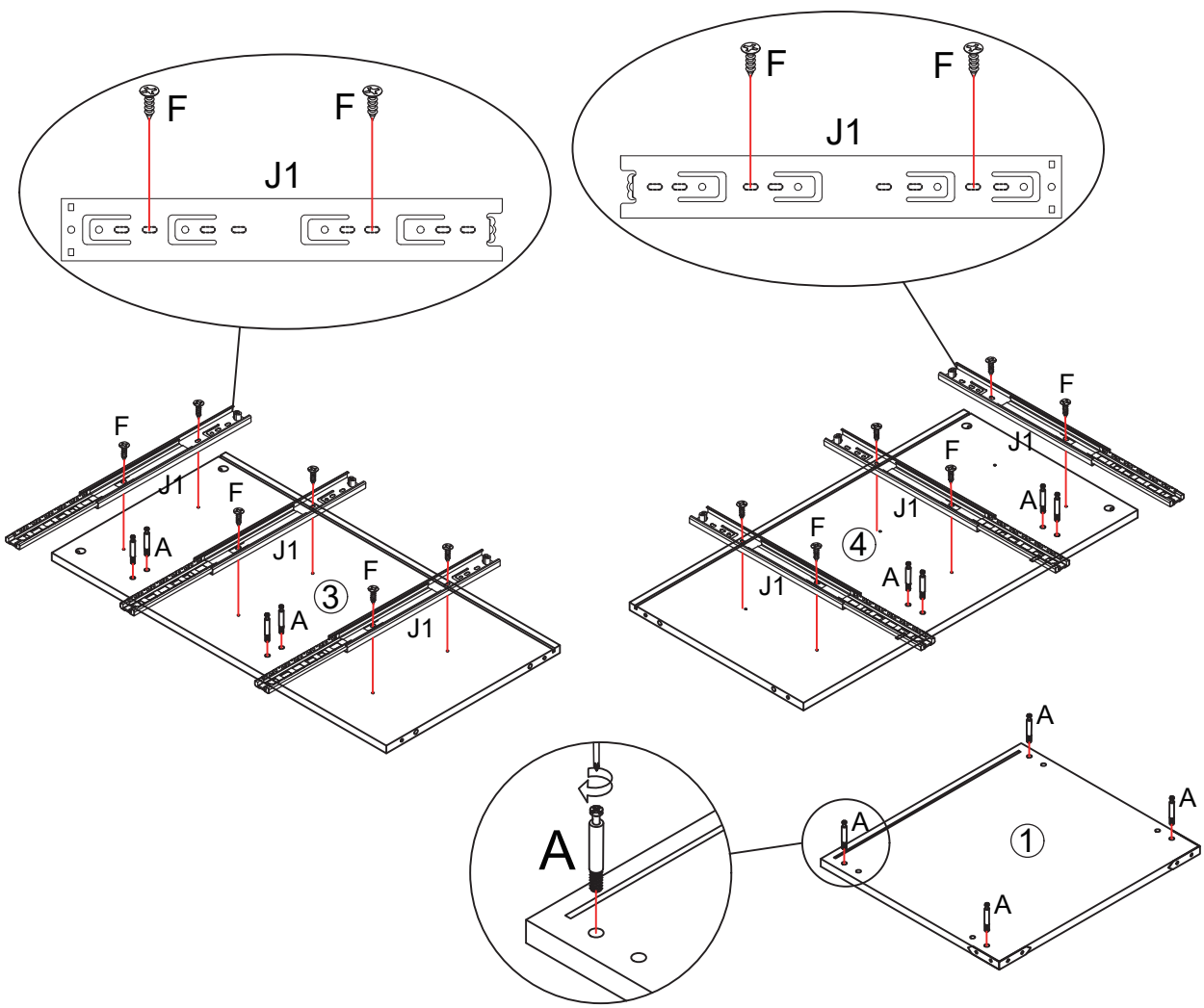

ASSEBMLY STEPS

B x 4	

STEP 2

Connect (5) to the panel (4) and lock the panel with cam lock (B).

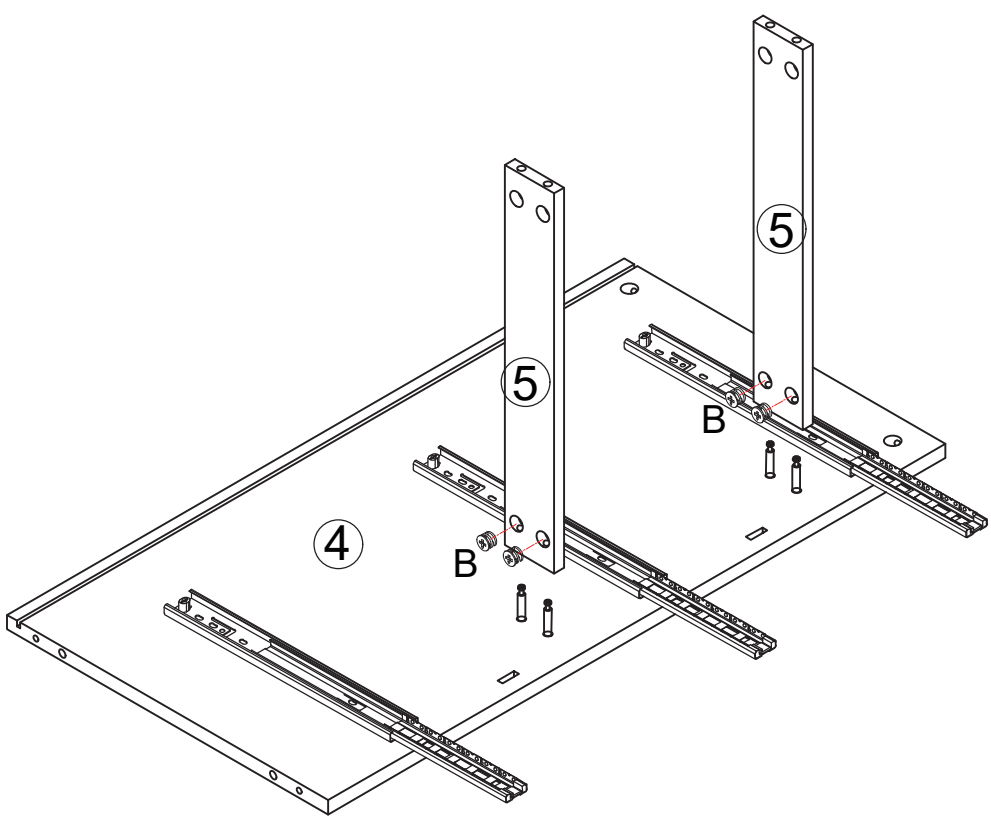

ASSEBMLY STEPS

B x 4	

STEP 3

Connect (5) to panel (3) and lock with cam lock (B).

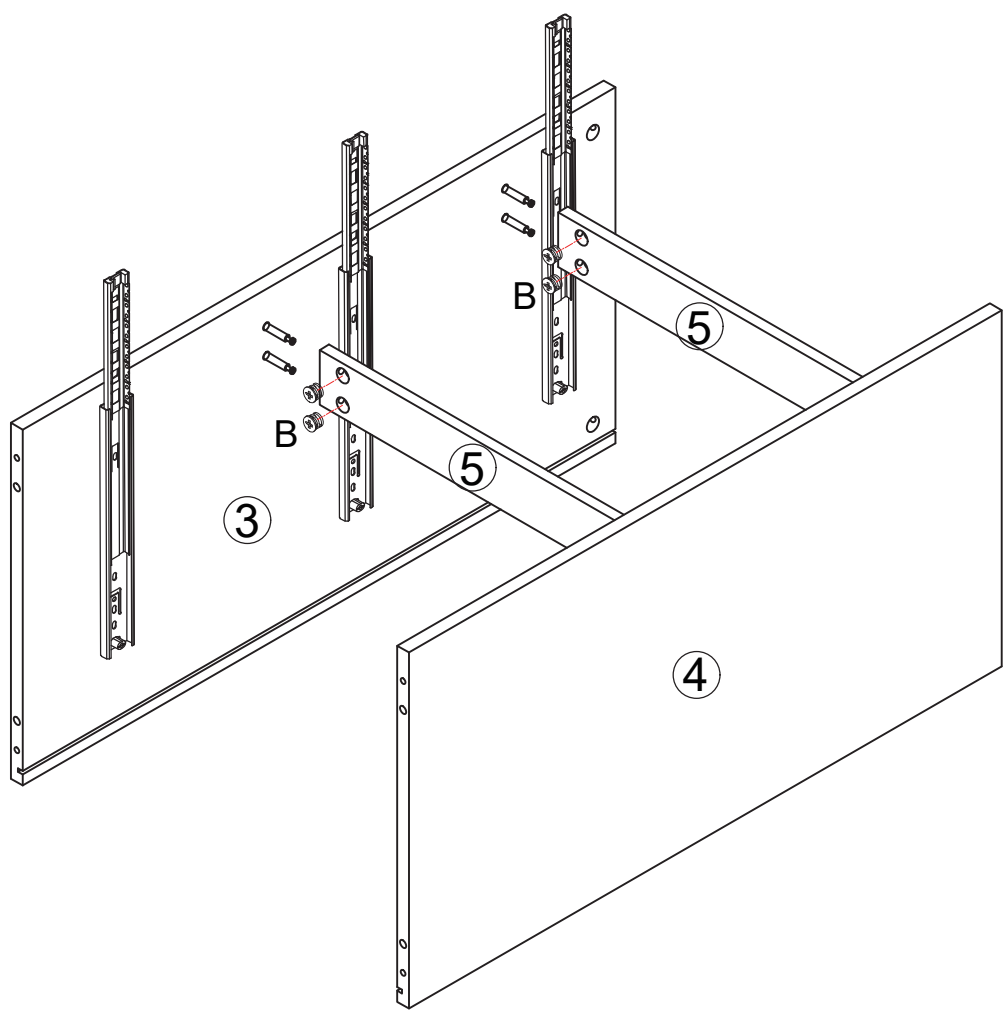

ASSEBMLY STEPS

C x 4		I x 4	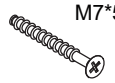 M7*50mm

STEP 4

1.Connect wood dowel (C) to the panel (3) (4) respectively.
2.Connect screw (I) to the (3) (4) panel through the (2) panel.

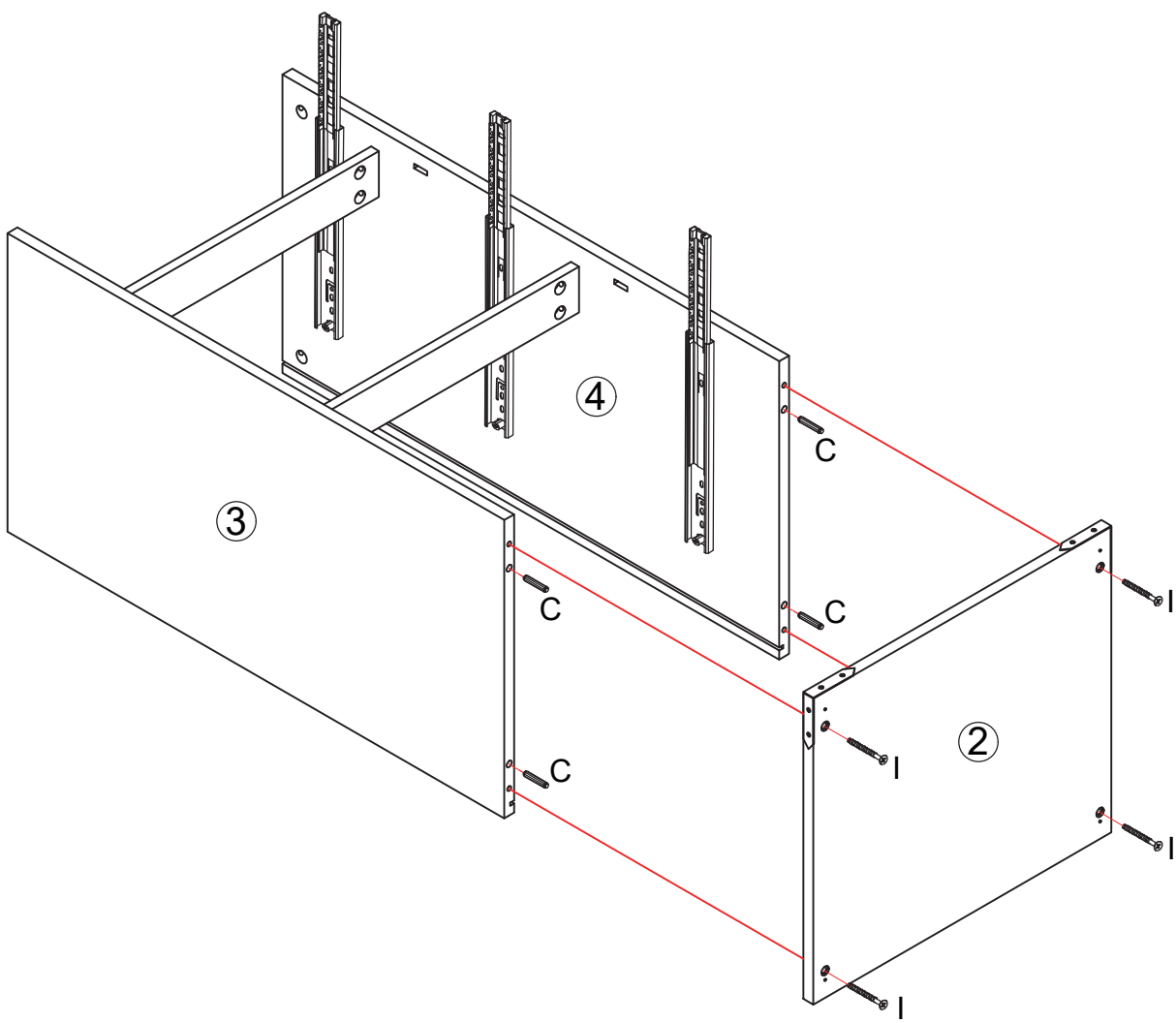

ASSEBMLY STEPS

N x 4	

STEP 5

Fix foot peg (N) on the panel (2).

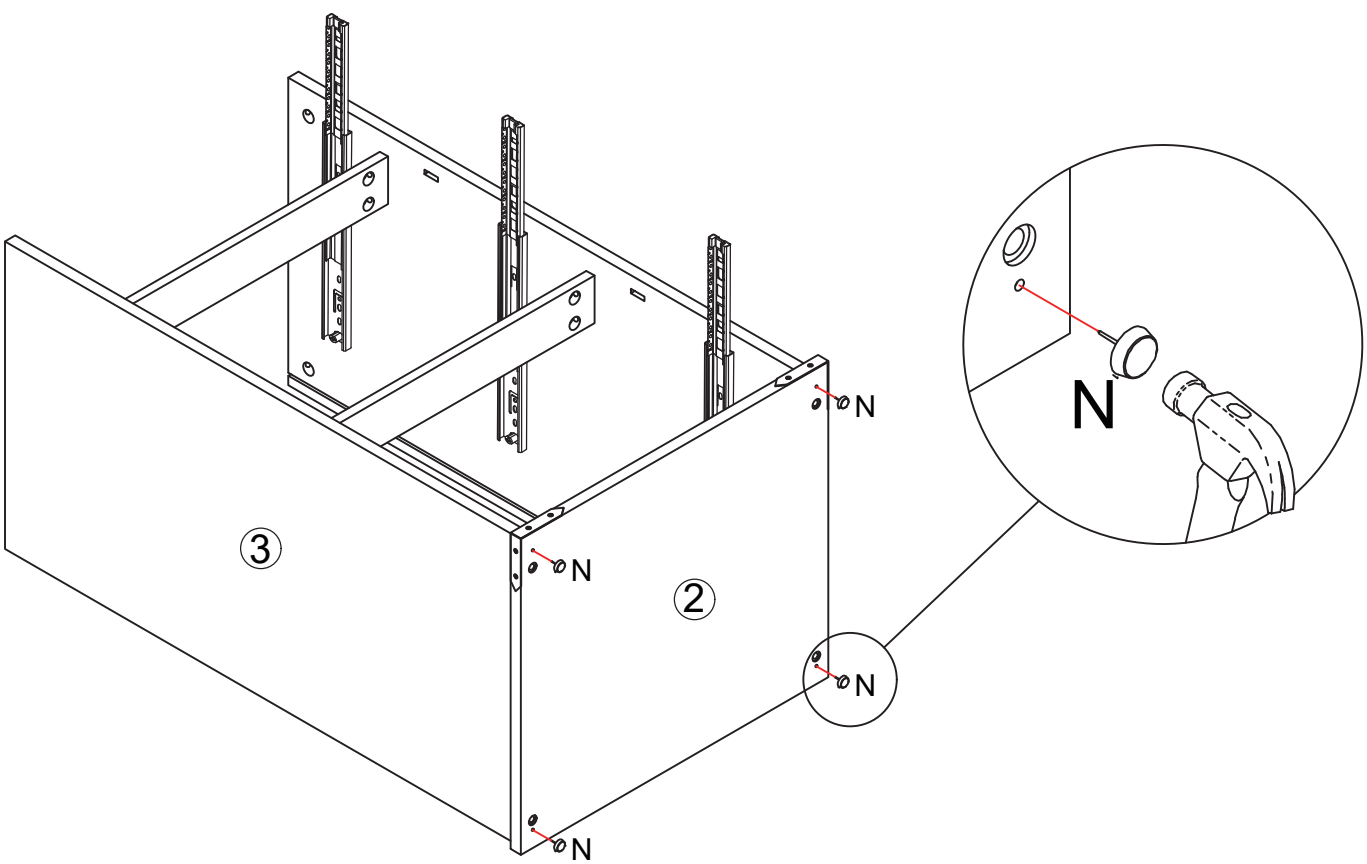

ASSEBMLY STEPS

Q x 1	

STEP 6

Insert the two back panel (6) and connect with back panel seam strip (Q).

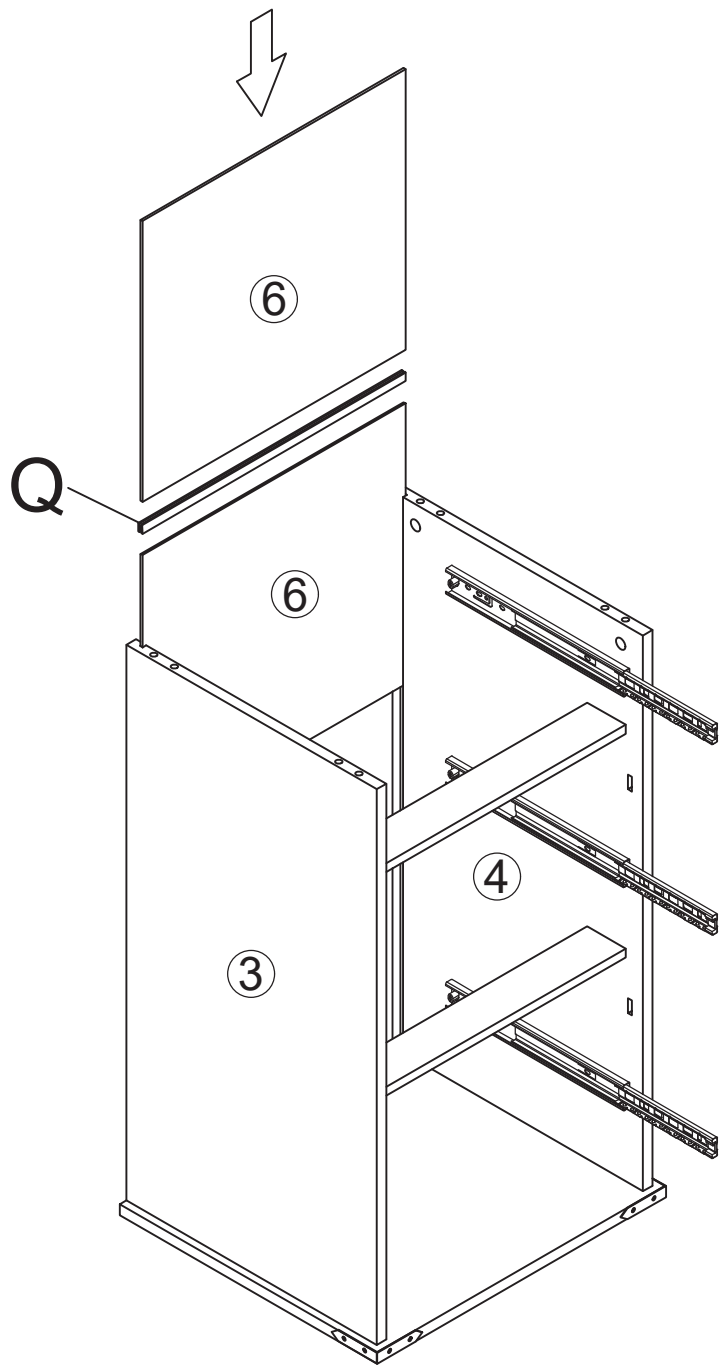

ASSEBMLY STEPS

B x 4		C x 4	

STEP 7

1. Connect wood dowel (C) to the panel (3) (4) respectively.
2. Connect (1) to the panel (3) (4) and lock the panel with cam lock (B).

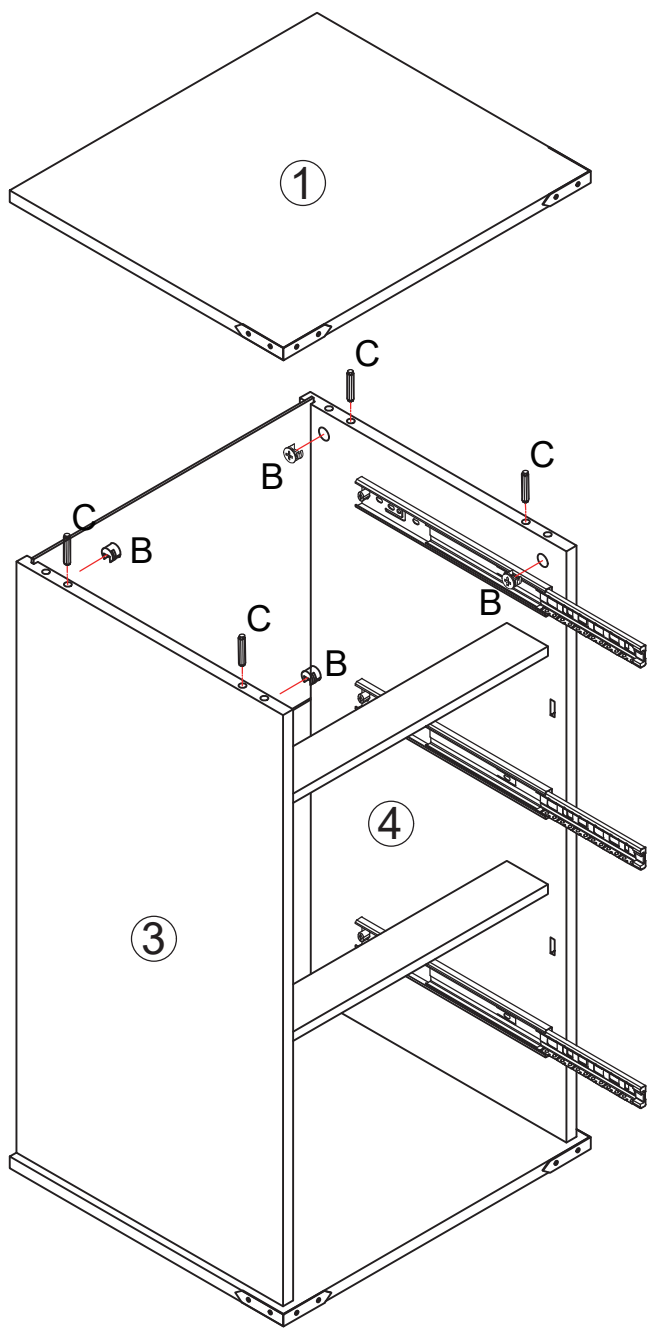

ASSEBMLY STEPS

A x 12	

STEP 8

Connect cam bolt (A) to the panel (7) (12) (13).

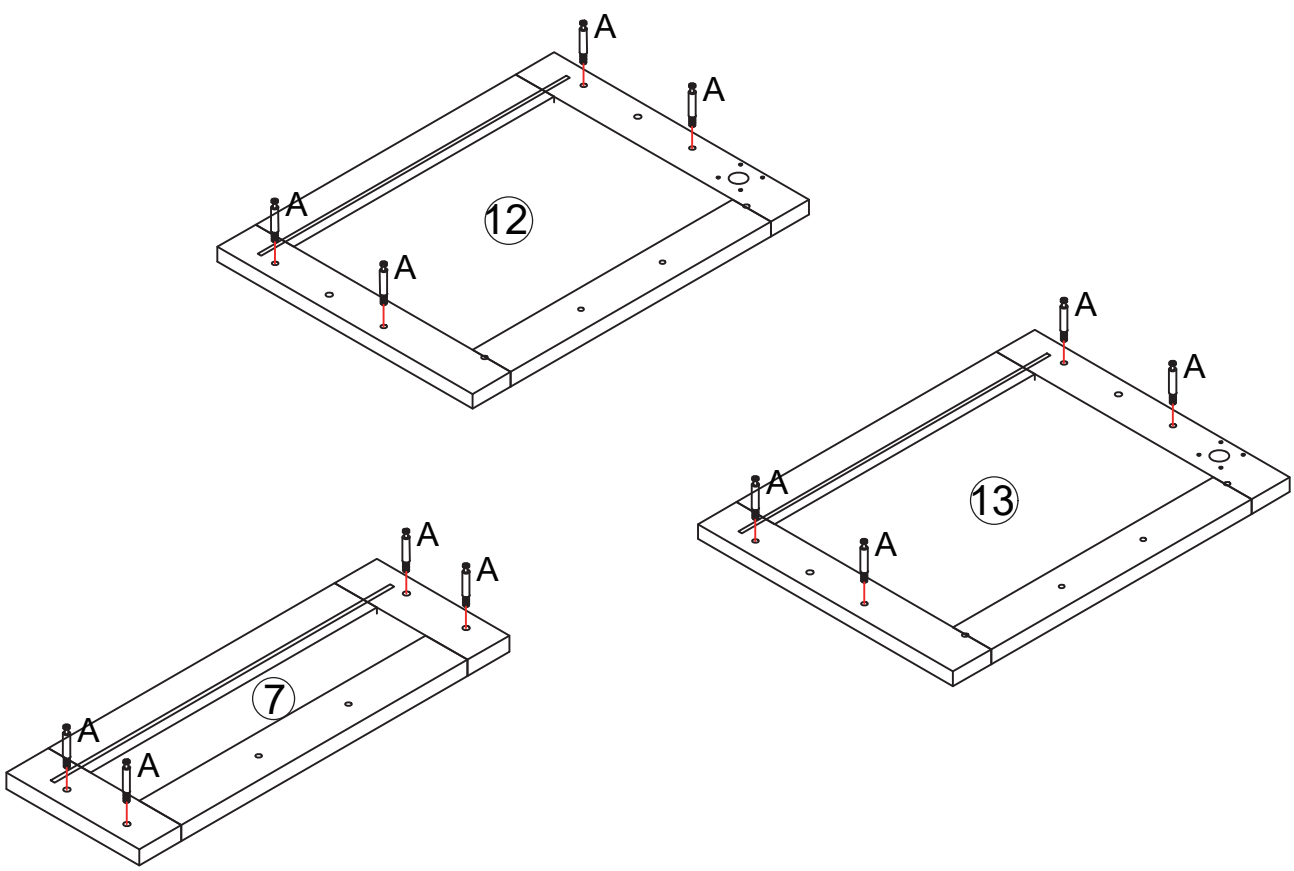

ASSEBMLY STEPS

B x 4	

STEP 9

Connect the panel (9) (10) to the panel (7) and lock it with cam lock (B), insert the panel (11).

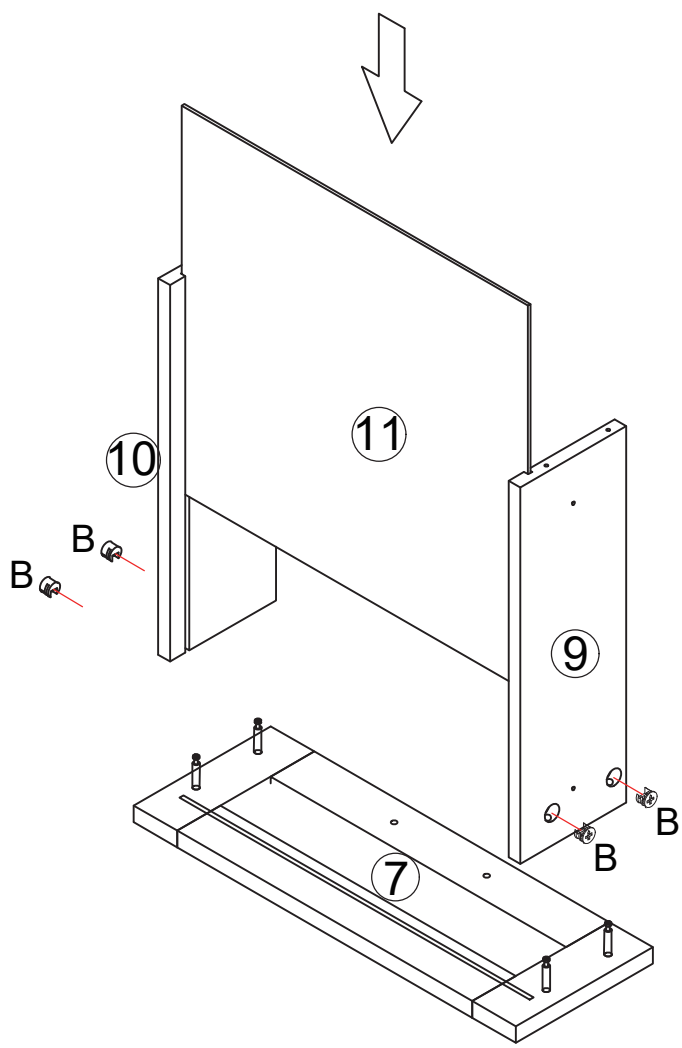

ASSEBMLY STEPS

H x 4	 M3.5*30mm

STEP 10

Connect screw (H) to the panel (9) (10) respectively through the panel (8).

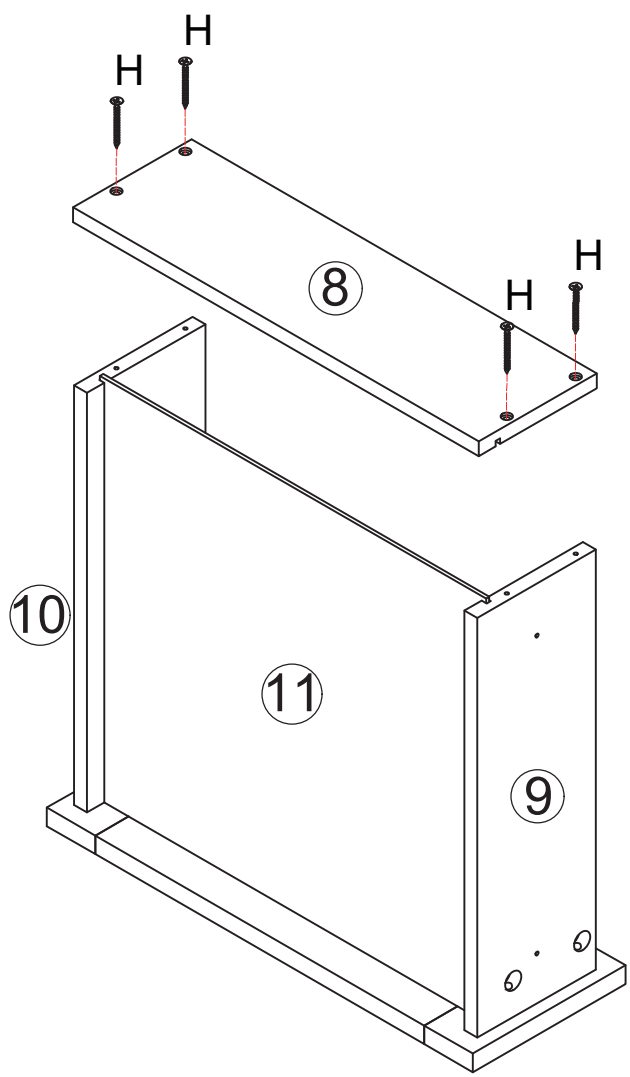

ASSEBMLY STEPS

F x 4	M3.5*12mm 	J2 x 1		L x 1		M x 2	M4*19mm 

STEP 11

Connect rail (J2) to the panel (9) (10) with screws (F).

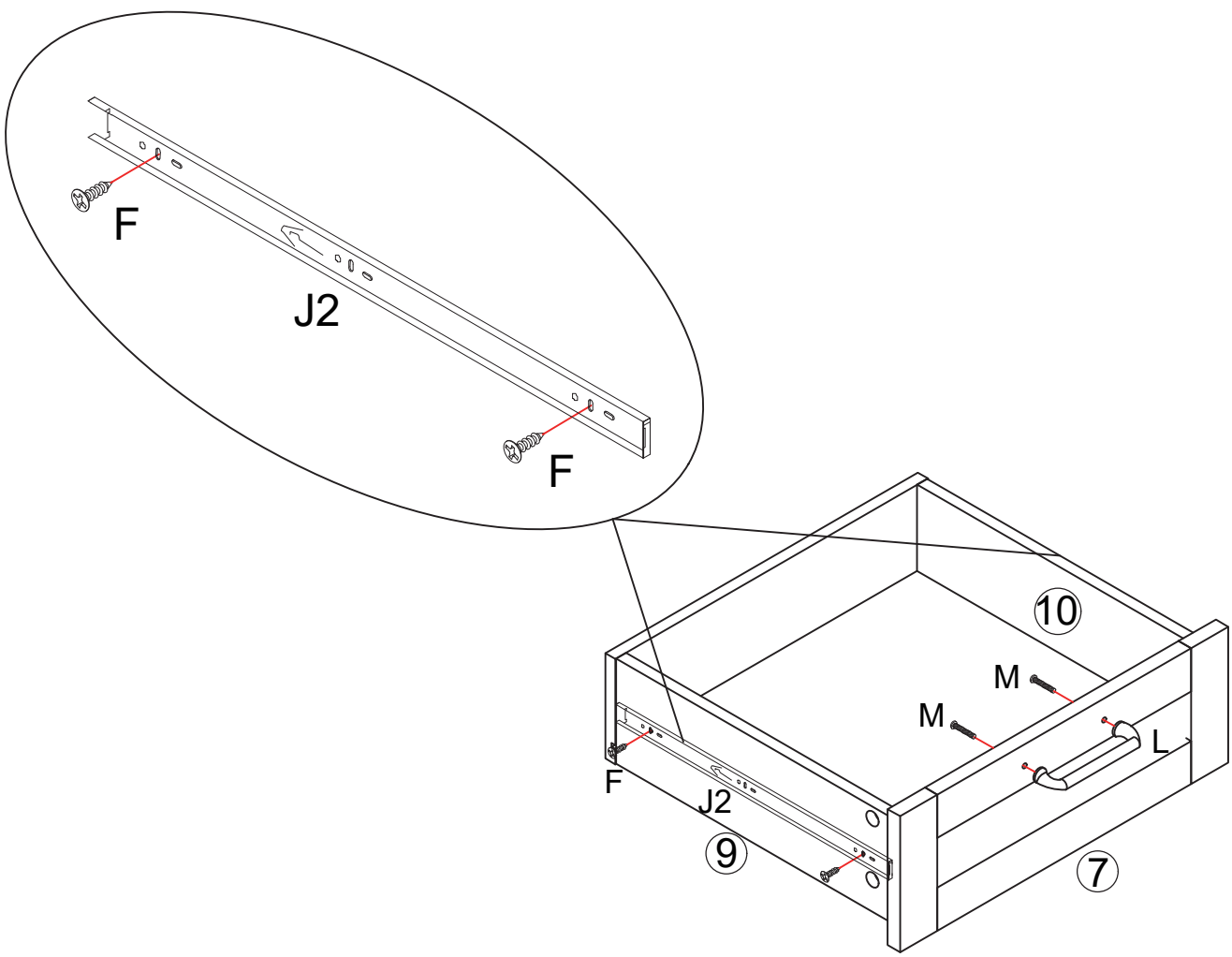

ASSEBMLY STEPS

B x 8		D x 4		K x 4	

STEP 12

1. Connect wood dowel (D) to the panel (12) (13).
2. Connect the panel (15) (16) to the panel (12) (13) respectively.
3. Insert the back panel (11) along the groove.
4. Connect hanging rod (K) to the panel (12) (13) respectively.

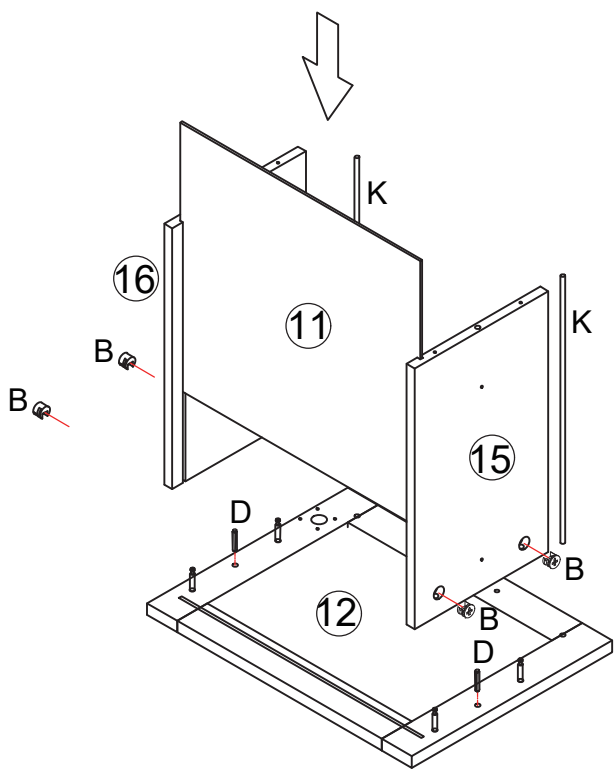

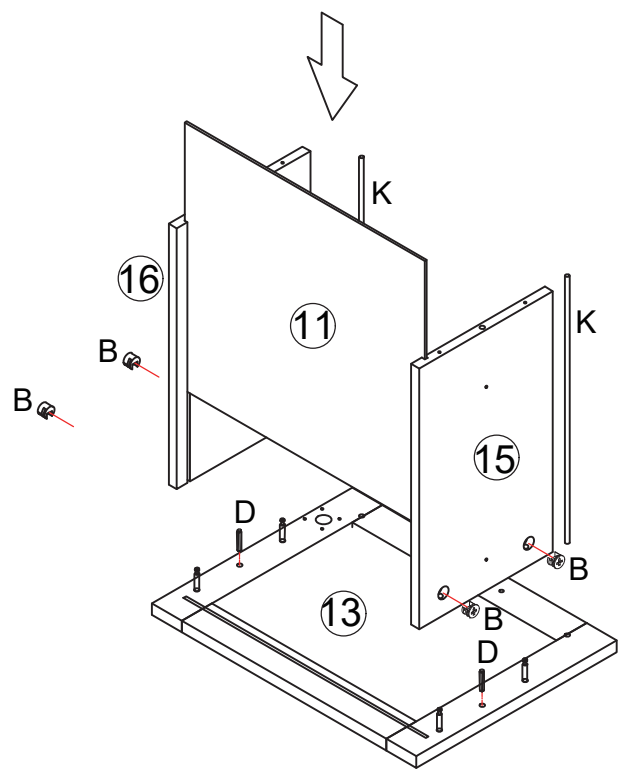

ASSEBMLY STEPS

D x 4		H x 8	 M3.5*30mm

STEP 13

1.Connect wood dowel (D) to the panel (15) (16).
2.Connect screw (H) to the panel (15) (16) through the panel (14).
3.Connect hanging rod (K) to the panel (14).

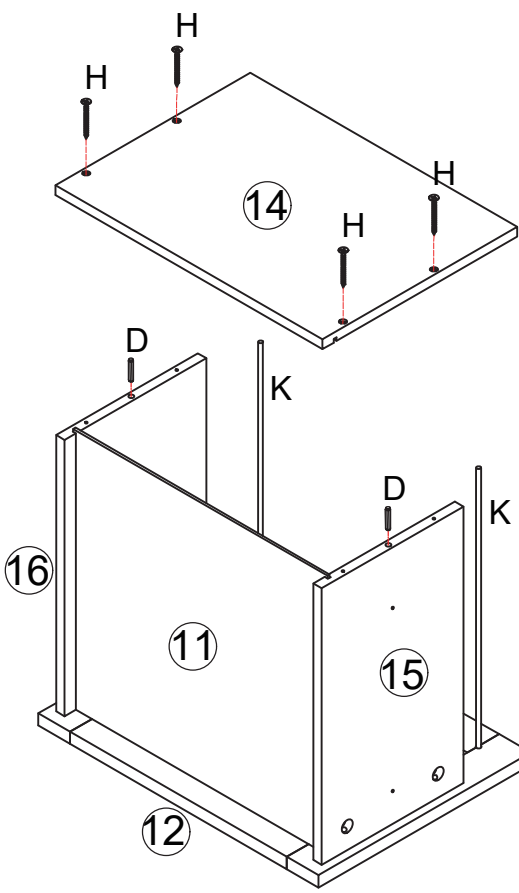

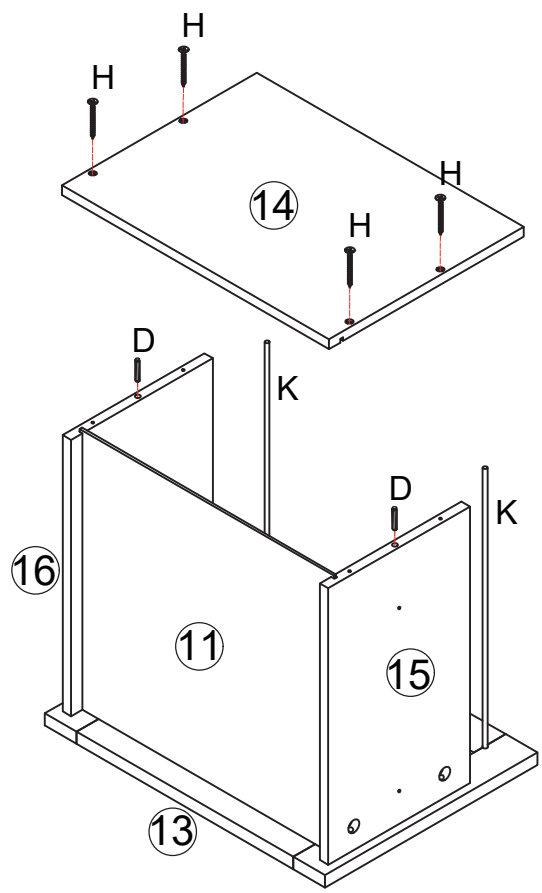

ASSEBMLY STEPS

E x 1	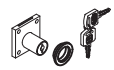	F x 4	 M3.5*12mm	G x 4	 M3.5*16mm	J2 x 1	
L x 1		M x 2	 M4*19mm				

STEP 14

1. Install rail (J2) to the panel (15) (16) through the screws (F).
2. Install lock & keys (E) onto the panel (12) with screws (G) and lock drawer handle (L) with screws (M).

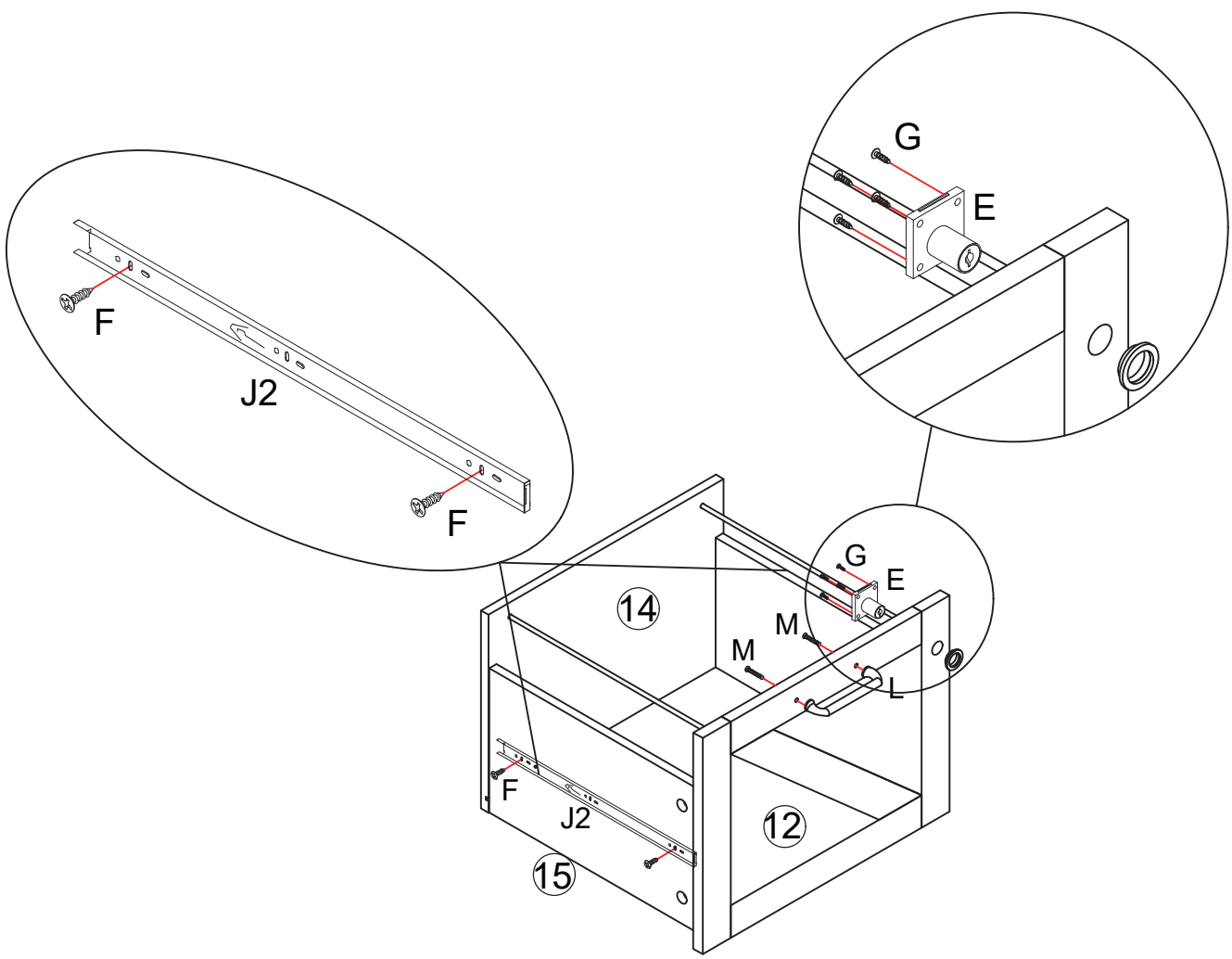

ASSEBMLY STEPS

E x 1	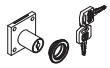	F x 4	M3.5*12mm 	G x 4	M3.5*16mm 	J2 x 1	
L x 1		M x 2	M4*19mm 				

STEP 15

1. Install rail (J2) to the panel (15) (16) through the screws (F).
2. Install lock & keys (E) onto the panel (13) with screws (G) and lock drawer handle (L) with screws (M).

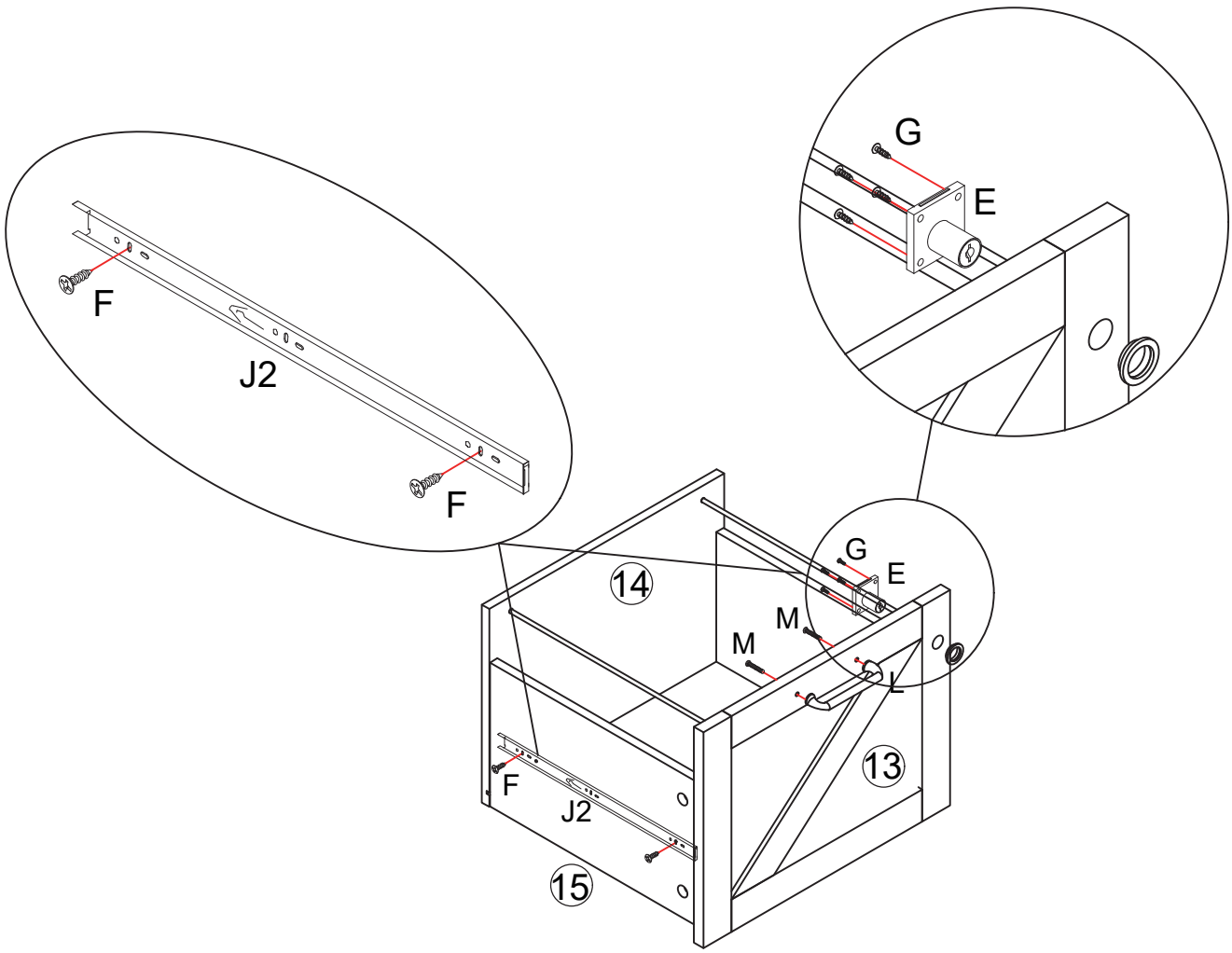

ASSEBMLY STEPS

STEP 16

Align to connect rail (J1) and rail (J2).

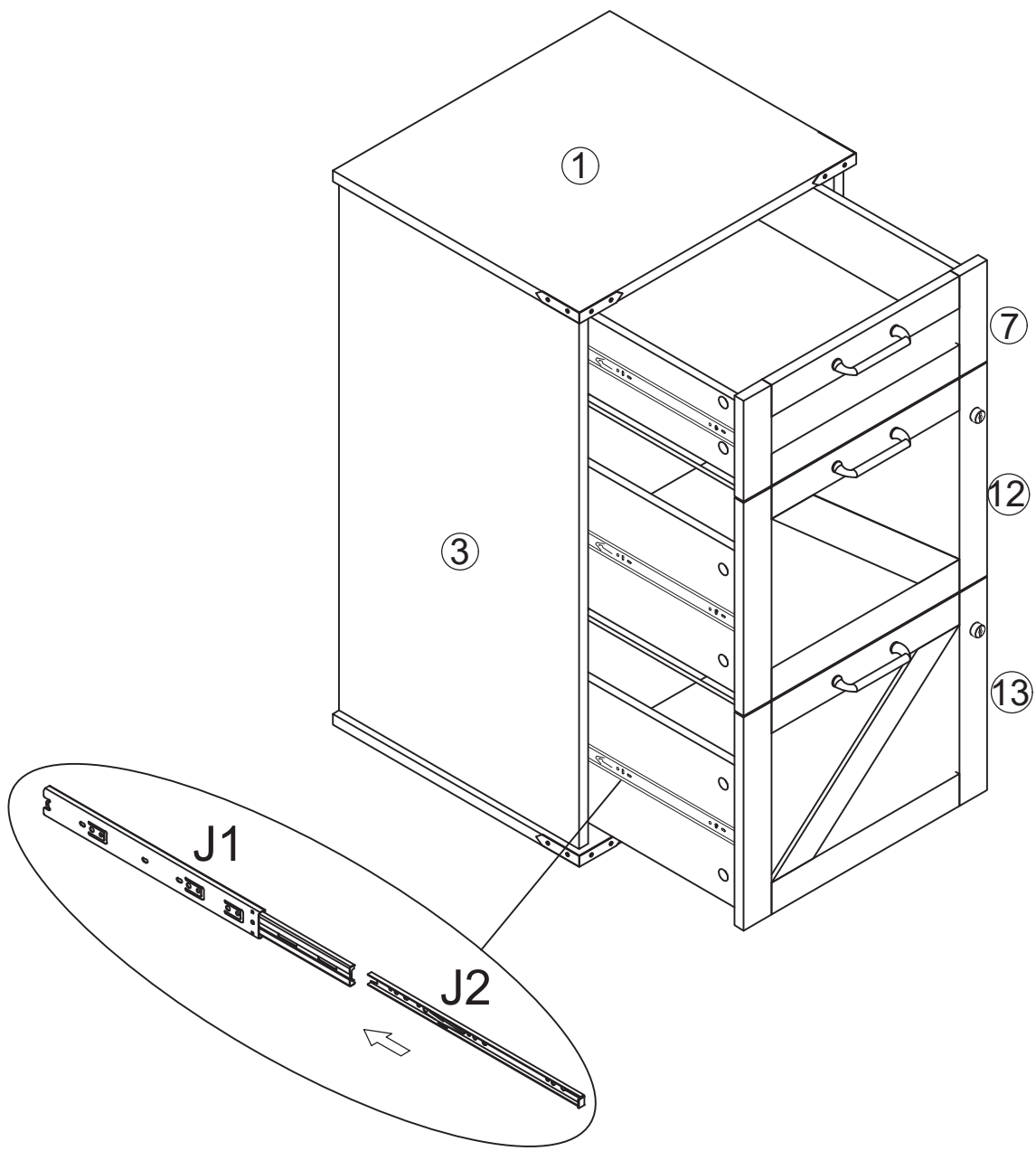

ASSEBMLY STEPS

O x 6		P x 6	M3*12mm 

STEP 17

Assemble mending wedge (O) to the panel with screws (P).

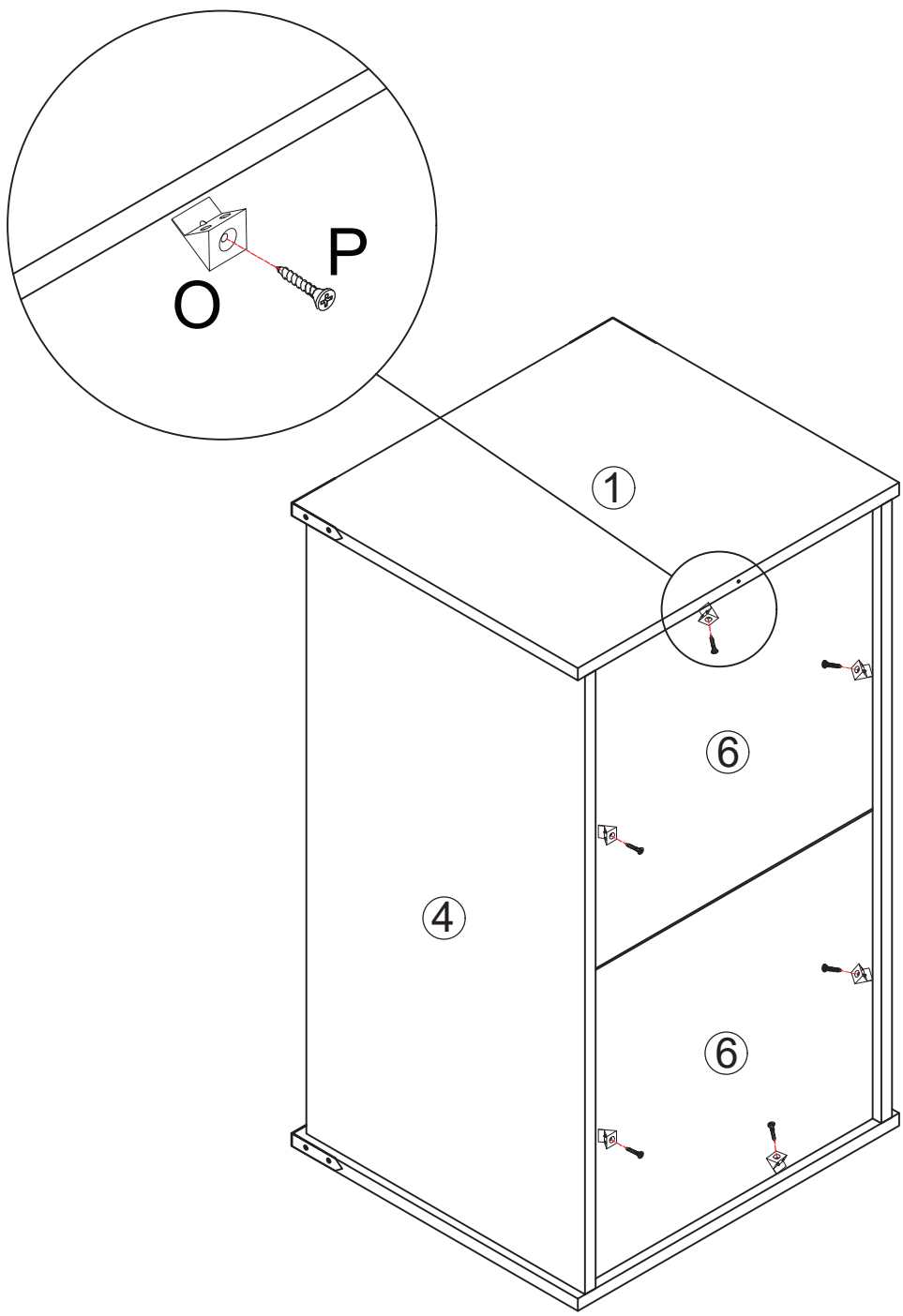

ASSEBMLY STEPS

R1 x 1		R2 x 1	M3.5*14mm 

STEP 18

Assemble anti-tipping kit (R1) to the board using screws (R2).

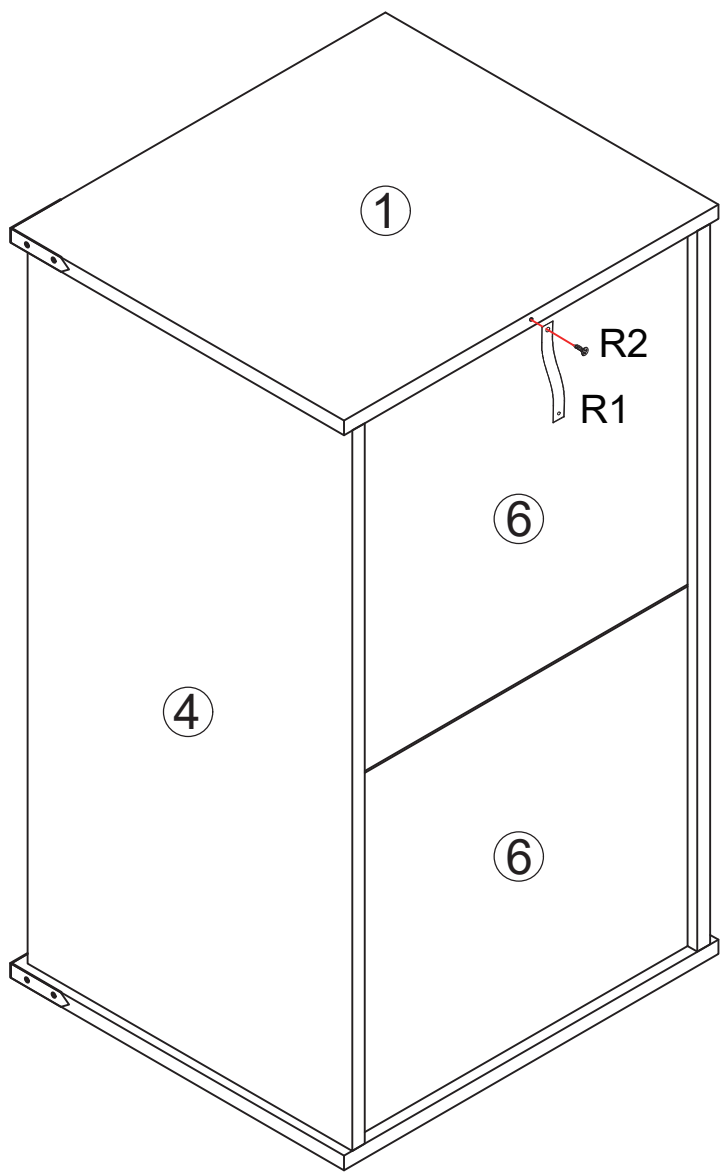

ASSEBMLY STEPS

R3 x 1	M3.5*35mm 	R4 x 1	

STEP 19

1.Install anti-tipping kit (R4) into the wall.
2.Connect the screws (R3) to (R4) through (R1).

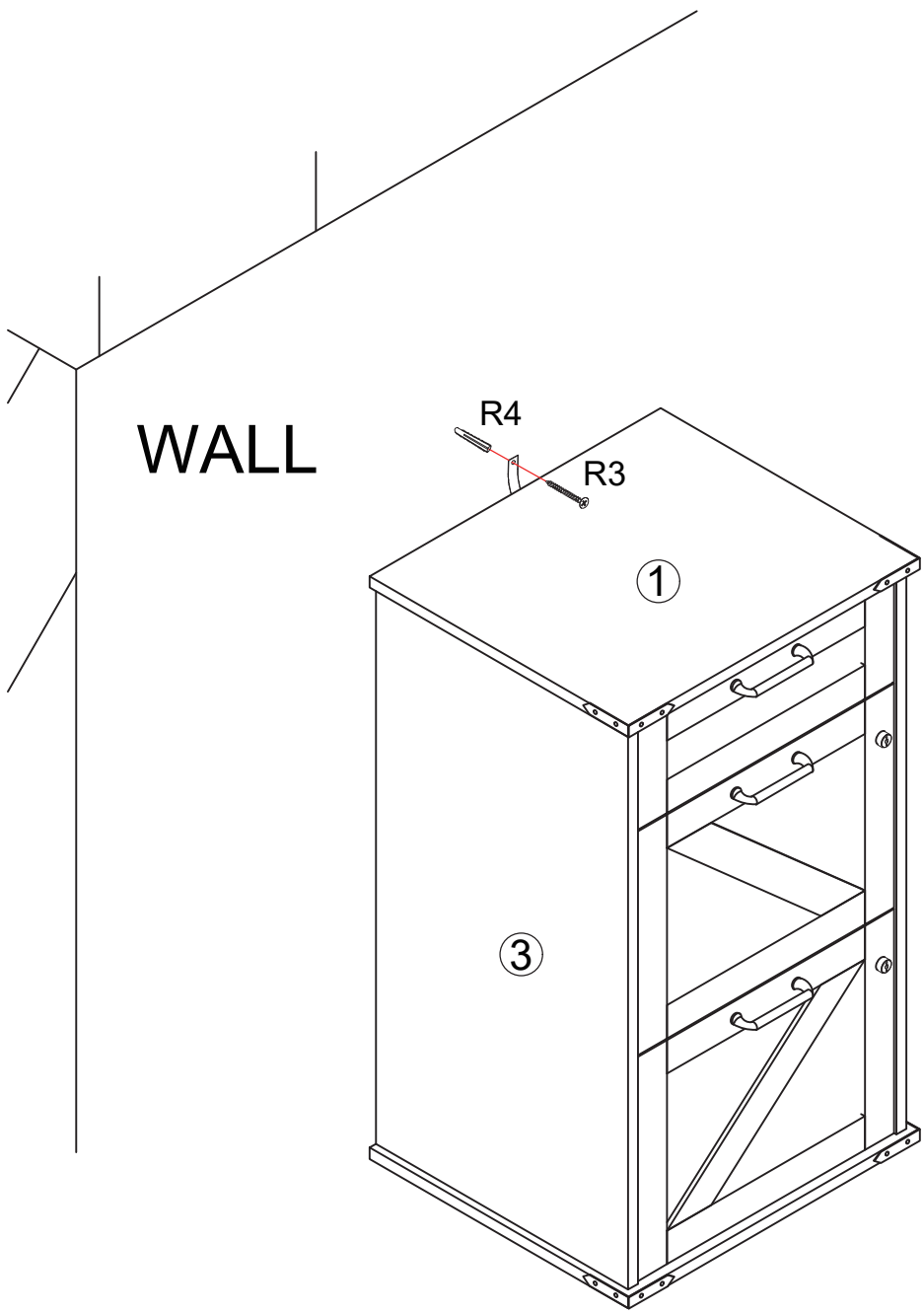

Supplementary Instructions for Safe Use

English

⚠ WARNING

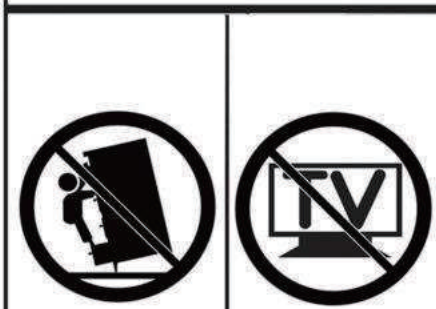

Children have died from furniture tipover. To reduce the risk of furniture tipover:

- •ALWAYS install tipover restraint provided.
- •NEVER put a TV on this product.
- •NEVER allow children to stand, climb or hang on drawers, doors, or shelves.
- •NEVER open more than one drawer at a time.
- •Place heaviest items in the lowest drawers.
- •Do not defeat or remove the drawer interlock system.

This is a permanent label.
Do not remove!

French

⚠ ATTENTION

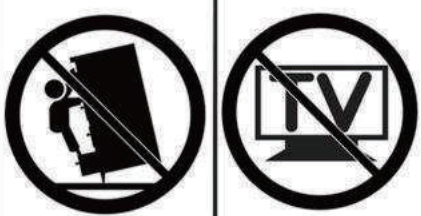

Des enfants sont morts du basculement des meubles. Pour réduire le risque de basculement des meubles:

- • TOUJOURS installer la retenue de basculement fournie.
- • NE JAMAIS mettre de téléviseur sur ce produit.
- • NE JAMAIS permettre aux enfants de se tenir debout, de grimper. ou de s'accrocher à des tiroirs, des portes ou des étagères.
- • N'ouvrez JAMAIS plus d'un tiroir à la fois.
- • Placez les objets les plus lourds dans les tiroirs les plus bas.
- • Ne désactivez pas et ne retirez pas le système de verrouillage du tiroir.

Ceci est une étiquette permanente.
Ne pas enlever!

German

⚠ WARNUNG

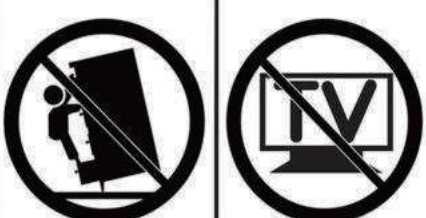

Kinder sind an einem Möbelkipp gestorben. So verringern Sie das Risiko eines Umkippens von Möbeln:

- • Installieren Sie IMMER die mitgelieferte Kipprückhaltevorrichtung.
- • Stellen Sie NIEMALS einen Fernseher an dieses Produkt.
- • Lassen Sie Kinder NIEMALS an Schubladen, Türen oder Regalen stehen klettern oder hängen.
- • Öffnen Sie NIEMALS mehr als eine Schublade gleichzeitig.
- • Legen Sie schwerste Gegenstände in die untersten Schubladen.
- • Besiegen oder entfernen Sie das Schubladenverriegelungssystem nicht.

Dies ist ein dauerhaftes Etikett.
Nicht entfernen!