INSTRUCTION MANUAL

Wine & Beverage Cooler

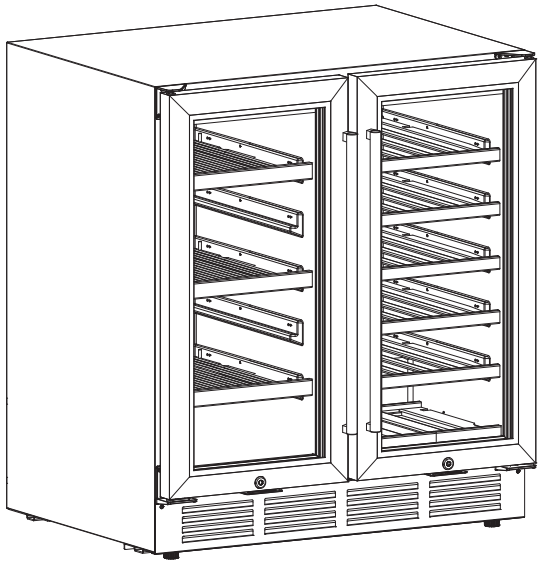

MODEL: L300HY

Support Email: **service@crystalhomeinc.com**

Support Phone: **(213)516-2282**

Read this manual and follow all safety rules and operating instructions before first use of this wine cooler.

CONTENTS

IMPORTANT SAFEGUIDES……P.3

PRODUCT FEATURES……..P.5

INSTALLATION……P.5

OPERATING THE APPLIANANCE……P.6

CARE AND MAINTENANCE……P.8

TROUBLESHOOTING……...P.9

WARRANTY TERMS…..……...P.10

Thanks for choosing our products, hope that our products can bring you different feelings. Please read the following safety and operating instructions carefully before using the wine cooler.

IMPORTANT SAFEGUIDES

- Plug into a grounded 3-prong outlet, do not remove grounding prong, do not use an adapter, and do not use an extension cord.
- Read all instructions before using the wine chiller.
- Child entrapment and suffocation are not problems of the past. Junked or abandoned appliances are still dangerous.
- Before you throw away your old wine chiller, take off the door but leave the shelves in place so that children may not easily climb inside.
- Never allow children to operate, play with, or crawl inside the appliance.
- Replace all panels before operating.
- It is recommended that a separate circuit, serving only your appliance be provided. Use receptacles that cannot be turned off by a switch or pull chain.
- Never clean appliance parts with flammable fluids. These fumes can create a fire hazard or explosion. And do not store or use gasoline or other flammable vapours and liquids in the vicinity of this or any other appliance. The fumes can create a fire hazard or explosion.
- Before proceeding with cleaning and maintenance operations, make sure the power line of the unit is disconnected.
- Do not connect or disconnect the electric plug when your hands are wet.
- Unplug the appliance or disconnect power before cleaning or servicing. Failure to do so can result in electrical shock or death.
- Do not attempt to repair or replace any part of your appliance unless it is specifically recommended in this material. All other servicing should be referred to a qualified technician.
- Use two or more people to move and install appliance. Failure to do so can result in back or other injury.
  To ensure proper ventilation for your appliance, the front of the unit must be completely unobstructed. Choose a well-ventilated area with temperatures above 16°C (60.8°F) and below 32°C (89.6°F). This unit must be installed in an area protected from the element, such as wind, rain, water spray or drips.
- The appliance should not be located next to ovens, grills or other sources of high heat.
- The appliance must be installed with all electrical, water and drain connections in accordance with state and local codes. A standard electrical supply, properly grounded in accordance with the National Electrical Code and local codes and ordinances is required.
- Do not kink or pinch the power supply cord of appliance.
- The fuse (or circuit breaker) size should be 13 amperes.
- Never allow children to operate, play with or crawl inside the appliance.
- Do not use solvent-based cleaning agents of abrasives on the interior. These cleaners may damage or discolor the interior.
- Do not use this apparatus for other than its intended purpose.
- Before the appliance is used, it must be properly positioned and installed as described in this manual, so read the manual carefully. To reduce the risk of fire, electrical shock or injury when using the appliance.

Before the appliance is used, it must be properly positioned and installed as described in this manual, so read the manual carefully. To reduce the risk of fire, electrical shock or injury when using the appliance.

● It is recommended that a separate circuit, serving only your appliance be provided. Use receptacles that cannot be turned off by a switch or pull chain.
● Never clean appliance parts with flammable fluids. These fumes can create a fire hazard or explosion. And do not store or use gasoline or other flammable vapours and liquids in the vicinity of this or any other appliance. The fumes can create a fire hazard or explosion.
● Before proceeding with cleaning and maintenance operations, make sure the power line of the unit is disconnected.
● Do not connect or disconnect the electric plug when your hands are wet.
● Unplug the appliance or disconnect power before cleaning or servicing. Failure to do so can result in electrical shock or death.
● DO NOT use mechanical devices to defrost refrigerator. DO NOT puncture refrigerant tubing.
● To be repaired only by trained service personnel. DO NOT puncture refrigerant tubing.
● Consult repair manual / owner's guide before attempting to service this product. All safety precautions must be followed.
● To prevent a child from being entrapped, keep out of reach of children and not in the vicinity of the cooler.

WARNING	To reduce the risk of fire, electrical shock, or injury when using your appliance, follow these basic precautions:

- Read all instructions before using the wine chiller.
- **DANGER or WARNING:** Risk of child entrapment.
  Child entrapment and suffocation are not problems of the past. Junked or abandoned appliances are still dangerous.
- Before you throw away your old wine chiller, take off the door but leave the shelves in place so that children may not easily climb inside.
- Never allow children to operate, play with, or crawl inside the appliance.
- Never clean appliance parts with flammable fluids. The fumes can create a fire hazard or explosion.
- Do not store or use gasoline or any other flammable vapours and liquids in the vicinity of this or any other appliance. The fumes can create a fire hazard or explosion.

-Save these instructions-

EXTENSION CORD

Because of potential safety hazards, it is strongly recommended that you do not use an extension cord with this appliance. However, if you must use an extension cord, it is absolutely necessary that it be a UL/CUL Listed, 3-wire grounding type appliance extension cord having a grounding type plug and outlet and that the electrical rating of the cord be 115 volts and at least 10 amperes.

PRODUCT FEATURES

- Dual cooling zones for storing different beverages and wines together.
- Beverage Refrigerator (Left Zone) Capacity: 80 standard 12oz cans
- Wine Refrigerator (Right Zone) Capacity:28 standard 750ml wine bottles
- Stainless steel glass doors with sleek black cabinet
- Stainless steel handle
- Tempered double-layered glass door with stainless steel frame
- Adjustable temperature for both zones
- Soft White Interior Lights
- Fahrenheit and Celsius degree optional temperature indicators
- 3 removable wire shelves - Beverage Refrigerator (Left Zone)
- 6 removable wooden shelves - Wine Refrigerator (Right Zone)
- 2 Keys

INSTALATION

Before the first use

- Remove the exterior and interior packing materials.
- It is important for the appliance to be leveled in order to work properly. You may need to adjust the feet to make it level.
- Let the appliance stand upright for approximately 24 hours before connecting it to the power source, which helps to reduce the possibility of a cooling-system malfunction from handling during transportation.
- Use a soft cloth to clean the interior surface with lukewarm water.

Door handle installation

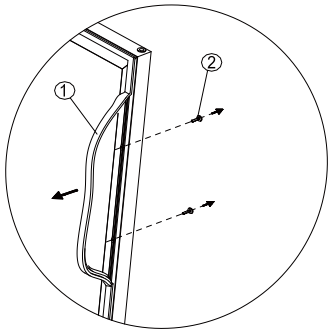

Fig:1

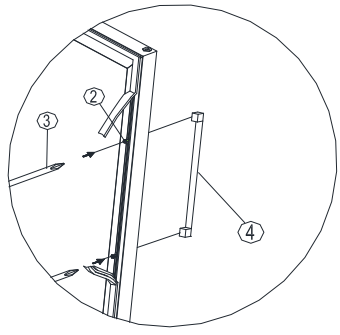

Fig:2

①sealing ②screws ③Phillips screwdriver ④Handle

How to install the handle：

1)Pull away the sealing gasket where the handle is to be installed as shown in Fig1. The gasket is easily displaced by hand. No tools are necessary.

2)Align the handle with the screws installed. Tighten the screws using a Phillips head screwdriver until the handle sets both flush and secured tightly against the door frame. (DO NOT over tighten as this will cause damage to the handle assembly).

3) Install the sealing gasket to its original position.

Built-in installation

These appliances are designed for both built-in or free standing installation. For built-in installation, ensure proper service access and ventilation, allow at least ¼” (6.35mm) space on each side and at the top

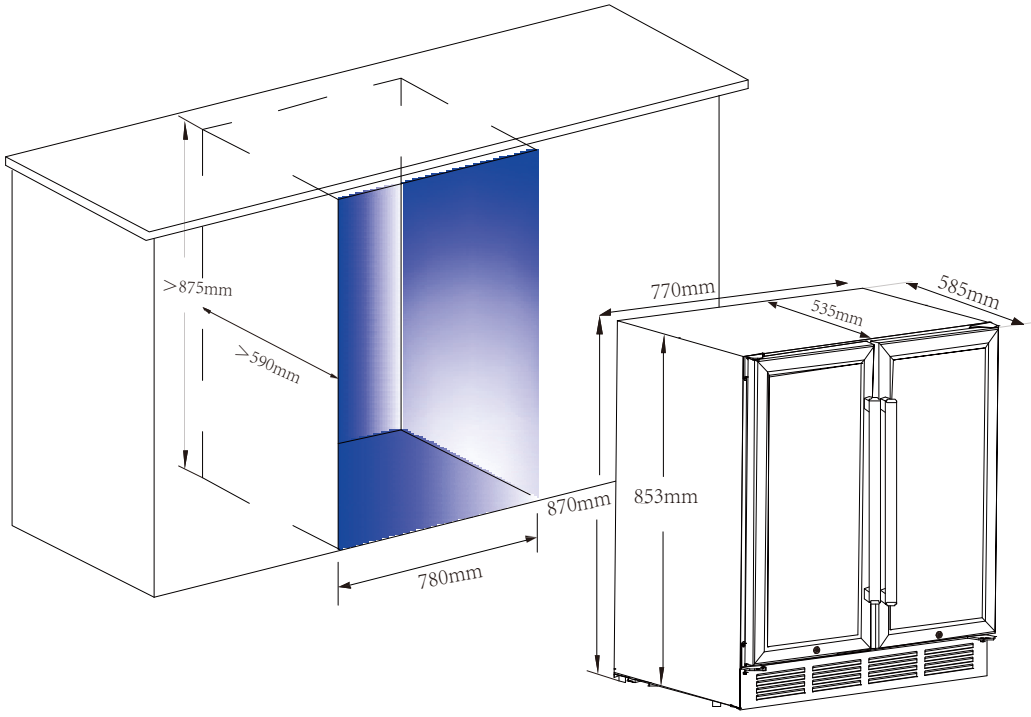

OPERATING THE APPLIANANCE

Control Panel

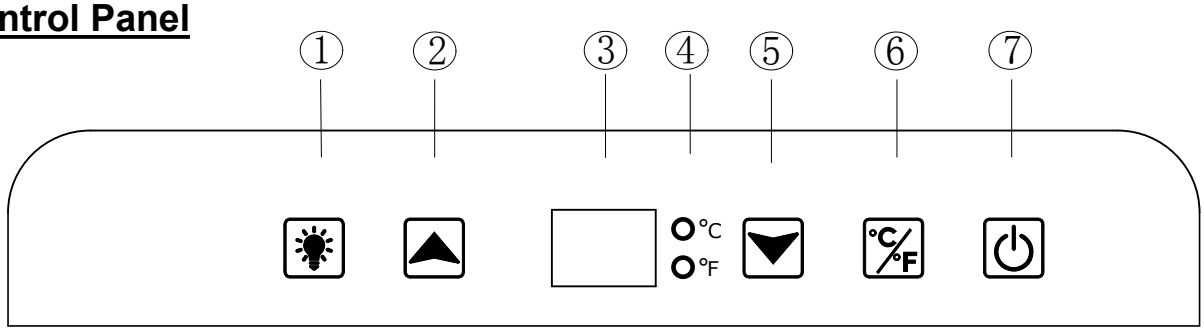

①Lighting button
②Temperature up
③Display window
④Fahrenheit and Celsius indicate light
⑤Temperature down
⑥Fahrenheit & Celsius switch button
⑦Power button

Power On /Off

● When the appliance is plugged into a power outlet, it powers on automatically.
● Touch the power button to turn on the appliance.Press power button for 3 seconds to turn off the appliance if needed.

Light Control

● Touch the lighting button to turn on (or turn off) the interior cool LED lighting.

Note: To keep the light automatically turns off 10 mins later, please press the lighting mark until you hear 2 “beep”, we have the tutorial video to guide you if you need it,

Set Temperature

Touch the ▲ or ▼ button to increase or decrease the temperature of the selected zone. The temperature will increase 1ºF or 1ºC if you touch the button once; On the contrary the temperature will decrease 1ºF or 1ºC if you touch the button once.

Cooling Zone	Temperature Range
Beverage Refrigerator (Left Zone)	2℃-10℃(35℉-50℉)
Wine Refrigerator (Right Zone)	5℃-18℃(41℉-64℉)

Note:

- If the appliance is power off suddenly. Please turn on the appliance after 3-5 minutes later. The temperature setting is with automatic memory function.
- This wine cooler is suitable for the ambient temperature 5-32℃/41-89.6ºF. If temperature is higher or lower than it, the performance may be affected.
- If it is the first time to use this appliance, it is normal that the preset temperature and display temperature is different. Everything will back to normal after few hours working.

Romving Shelf

●To avoid the damage of door sealing, please open the door fully when you slide out the shelves.

●For your convenience of taking wine, you can pull out the shelf by 1/3. Our product is designed with shelf holder to prevent the shelf pull over and fall off the cabinet.

●If you need to take off the shelf from cabinet, you can pull out the shelf to the position where the notch of shelf is exactly under the plastic post and then lift it up and out. (See figure below)

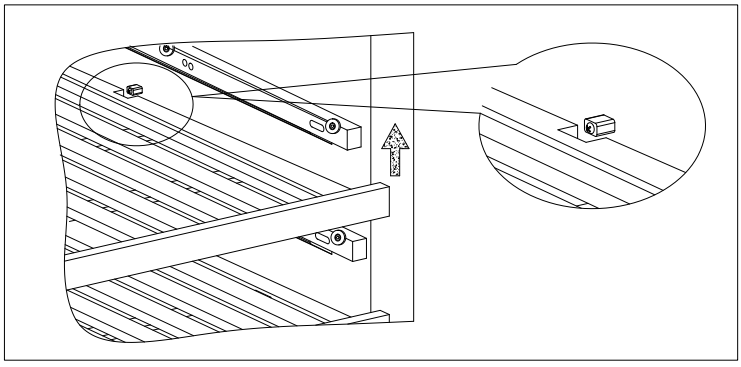

Storage

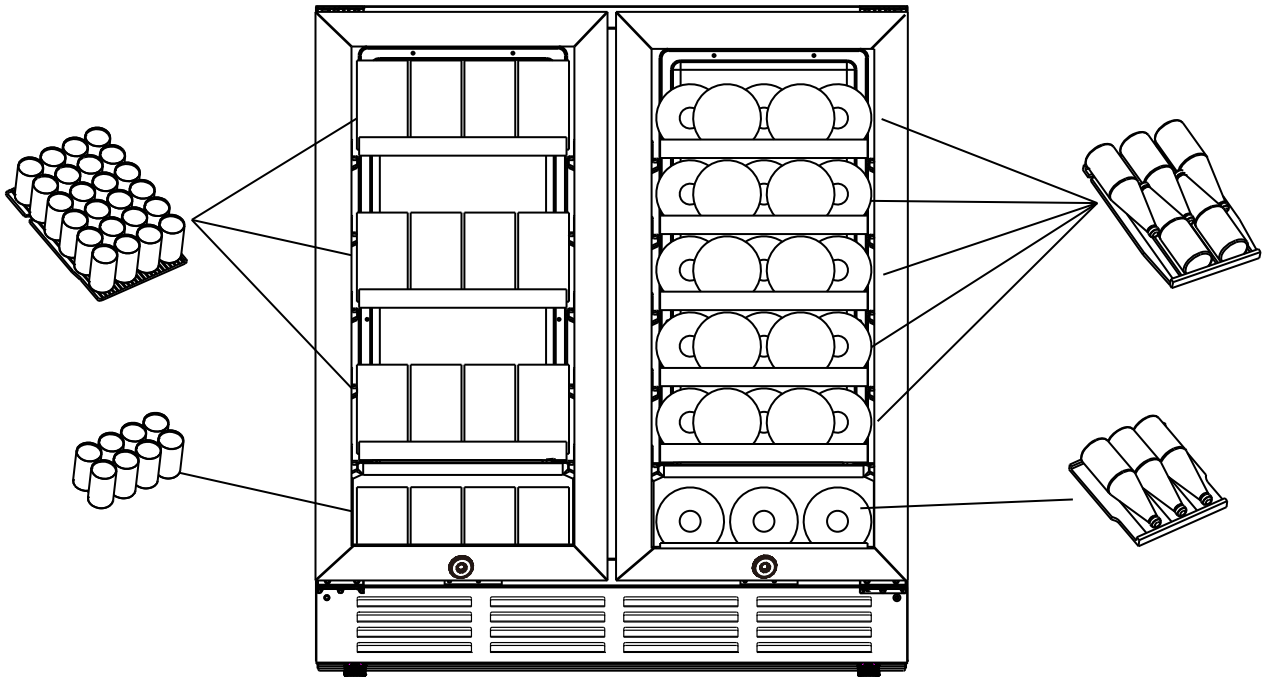

While bottles and cans may vary in size and dimension, the actual number of bottles and cans you may be able to store may vary from the amount quoted.

CARE AND MAINTENANCE

Cleaning your wine cooler

- Turn off the power, unplug the appliance, and remove all items including shelves
- Wash the inside surfaces with a warm water and soft cloth
- Wash the shelves with a mild detergent solution
- Wring excess water out of the sponge or cloth when cleaning area of the controls, or any electrical parts
- Wash the outside cabinet with warm water and mild liquid detergent. Rinse well and wipe dry with a clean soft cloth. Do not use steel wool or steel brush on the stainless steel. These will contaminate the stainless steel with steel particles and rusting may occur.

Power failure

Most power failures are corrected within a few hours and should not affect the temperature of your appliance if you minimize the number of times the door is opened. If the power is going to be off for a longer period of time, you need to take the proper steps to protect your contents.

Moving your wine chiller

●Remove all items (bottles)
●Tape down securely all loose items (shelves) inside your appliance.
●Turn the adjustable leg up to the base to avoid damage.
●Tape the door shut. Be sure the appliance stays secure in the upright position during transportation. If you absolutely need to transport the chiller horizontally, transport the chiller on its back (door on top). Also protect outside of appliance with a blanket, or similar item.

Energy saving tips

The wine chiller should be located in the coolest area of the room, away from heat producing appliances, and out of the direct sunlight.

TROUBLESHOOTING GUIDE

You can solve many common wine chiller problems easily, saving you the cost of a possible service call. Try the suggestions below to see if you can solve the problem before calling the service.

PROBLEM	POSSIBLE CAUSE
Wine cooler does not operate.	Not plugged in. The appliance is turned off. The circuit breaker tripped or a blown fuse.
Wine cooler is not cold enough.	External environment may require a higher setting. The door is opened too often. The door is not closed completely. The door gasket does not seal properly.
The compressor turns on and off frequently.	The room temperature is hotter than normal. A lots of bottles has been added to the chiller. The door is opened too often. The door is not closed completely. The temperature control is not set correctly. The door gasket does not seal properly.
The light does not work	Not plugged in. The circuit breaker tripped or a blown fuse. The light button is “OFF”.
Vibrations.	The chiller is not leveled The bottles are vibrating. There is an object under the chiller.
The chiller seems to make too much noise.	The flow of refrigerant is normal The circulation of the refrigeration The chiller is not level.
The door will not close properly.	The chiller is not level. The door was reversed and not properly installed. The gasket is dirty. The shelves are out of position.

Warranty Terms

Warranty Period

1. Customers are entitled to replacement or free repair service in case of quality defect(s) found in the product within 15 days upon receipt of the product.
2. Customers are entitled to free repair service for any product proven defective in material or workmanship that results in product failure during normal consumer usage and conditions within the valid warranty period, which is 12 months counting from the date of selling.
However, warranty period varies by product component and country of purchase. Please contact our after-sales service team via service@crystalhomeinc.com for detailed warranty information.
Warranty Exclusions
1. Products subjected to unauthorized repair, misuse, collision, neglect, mishandling, soaking, accident, and unauthorized alteration.
2. Products subjected to improper use or whose labels or security tags have been torn off or altered.
3. Products whose warranty has expired.
4. Products damaged due to force majeure, such as fire, flood, lightening, etc.
Warranty Claim Procedure
1. If failure or any problem occurs to your product after purchase, please contact us, or you can always contact our customer service through email at service@crystalhomeinc.com
2. Our customer service will guide you through the whole service procedure regarding any product issue or problem you have encountered.
We reserve the right to reexamine damaged or returned products.
Contact Card
Support Phone: (213)516-2282
Support Email: service@crystalhomeinc.com