# NV51T5511S

## 30" Single Wall Oven

SAMSUNG



## Signature Features

**5.1 cu. ft. Capacity**

- Accommodates a roast, multiple casserole dishes, or two full racks of cookies.

**Digital Touch Controls with Wi-Fi**

- Touch Controls offer an integrated and premium design that is easy to clean.

**Blue Ceramic Interior**

- Blue Ceramic enamel interior offers a premium look and feel.

## Available Colors

Stainless Steel (shown)

Fingerprint Resistant Black Stainless Steel



Digital Touch Controls



Blue Ceramic Interior

## Features

- 5.1 cu. ft. Capacity
- Wi-Fi Connectivity
- Glass Touch Controls
- Steam Clean & Self-Clean
- Halogen Lights
- Easy View Window
- 2 Heavy-Duty Racks
- Broil Element
- 6 Rack Positions
- Drop-Down Door Design
- ADA Compliant

## Convenience

- Sabbath Mode
- Hidden Heating Element
- Delay Start
- Child Safety Lock
- Proofing
- Warming Mode
- Kitchen Timer

**ADA Compliant**

# NV51T5511S

## 30" Single Wall Oven

SAMSUNG

### Cabinet Dimensions

Single Oven Installed in Cabinet

*Junction Box

**Allow a minimum of 22" for clearance to adjacent corners, drawers, walls, etc. when door is open.

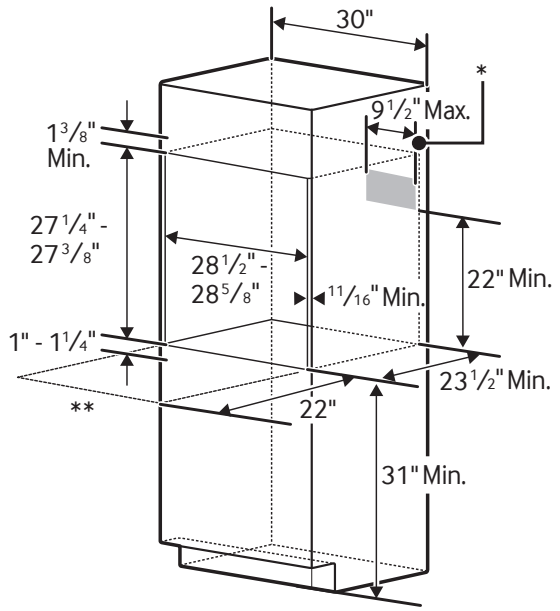


### Total Capacity: 5.1 cu. ft.

- Hidden Bake Element
- Bake: 175°F–550°F
- Broil: Low-High
- Proofing
- Sabbath Mode

### Warranty

One (1) Year All Parts and Labor

### Product Dimensions & Weight (WxHxD)

Outside (Max) Wall Oven Dimensions: 29 3/4" x 28 13/16" x 26 5/8"

Wall Oven Cut-Out Dimensions: 28 1/2" x 27 1/4" x 23 1/2"

Weight: 129.6 lbs

### Shipping Dimensions & Weight (WxHxD)

Dimensions: 33 11/16" x 33 3/4" x 29 13/16"

Weight: 151.9 lbs

| Color | Model # | UPC Code |
|---|---|---|
| Stainless Steel | NV51T5511SS/AA | 887276384993 |
| Fingerprint Resistant Black Stainless Steel | NV51T5511SG/AA | 887276385303 |

### Product Dimensions

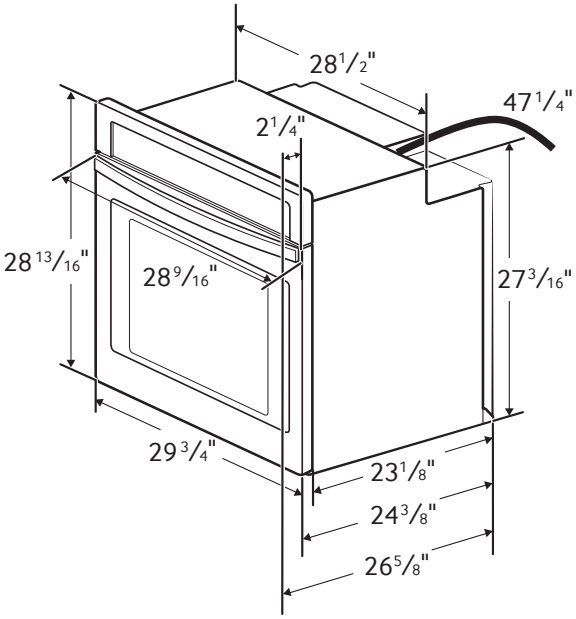


| KW RATING | |
|---|---|
| 240V | 4.9 kW |
| 208V | 3.7 kW |
| **BREAKER SIZE** | |
| 240V | 30 Amps |
| 208V | 20 Amps |

Actual color may vary. Design, specifications, and color availability are subject to change without notice. Non-metric weights and measurements are approximate.

©2023 Samsung Electronics America, Inc. 85 Challenger Road, Ridgefield Park, NJ 07660. Tel: 800-SAMSUNG. samsung.com. Samsung is a registered trademark of Samsung Electronics Co. Ltd.