Assembly Instructions

White Stain
Natural
White Stain / Grey Top

Product Issues? Please Call Us Before Contacting Your Retailer

We can help with Assembly Issues, Part Requests, Damages, & All Other Product Related Questions

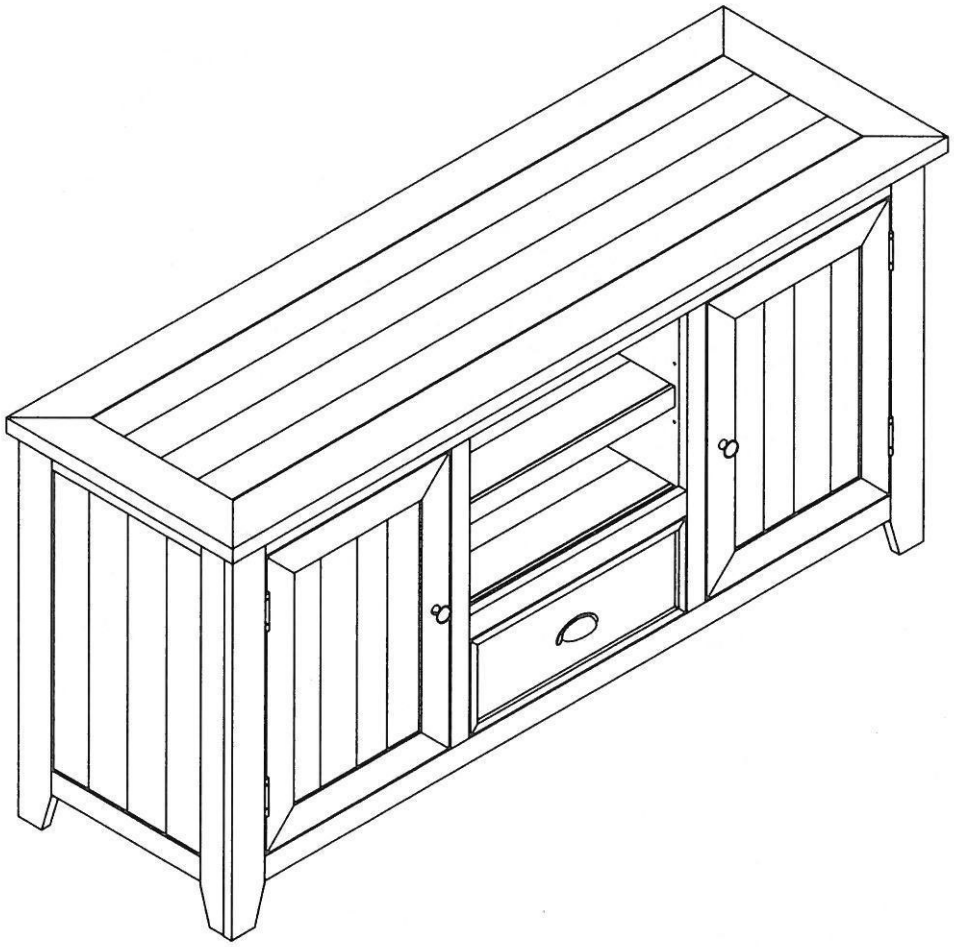

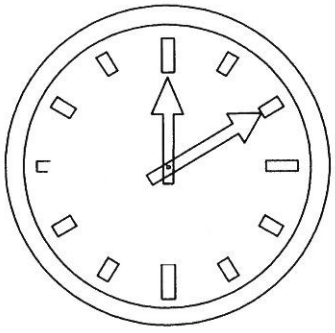

10 min

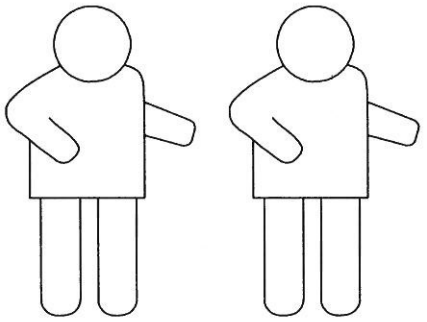

Two People Required

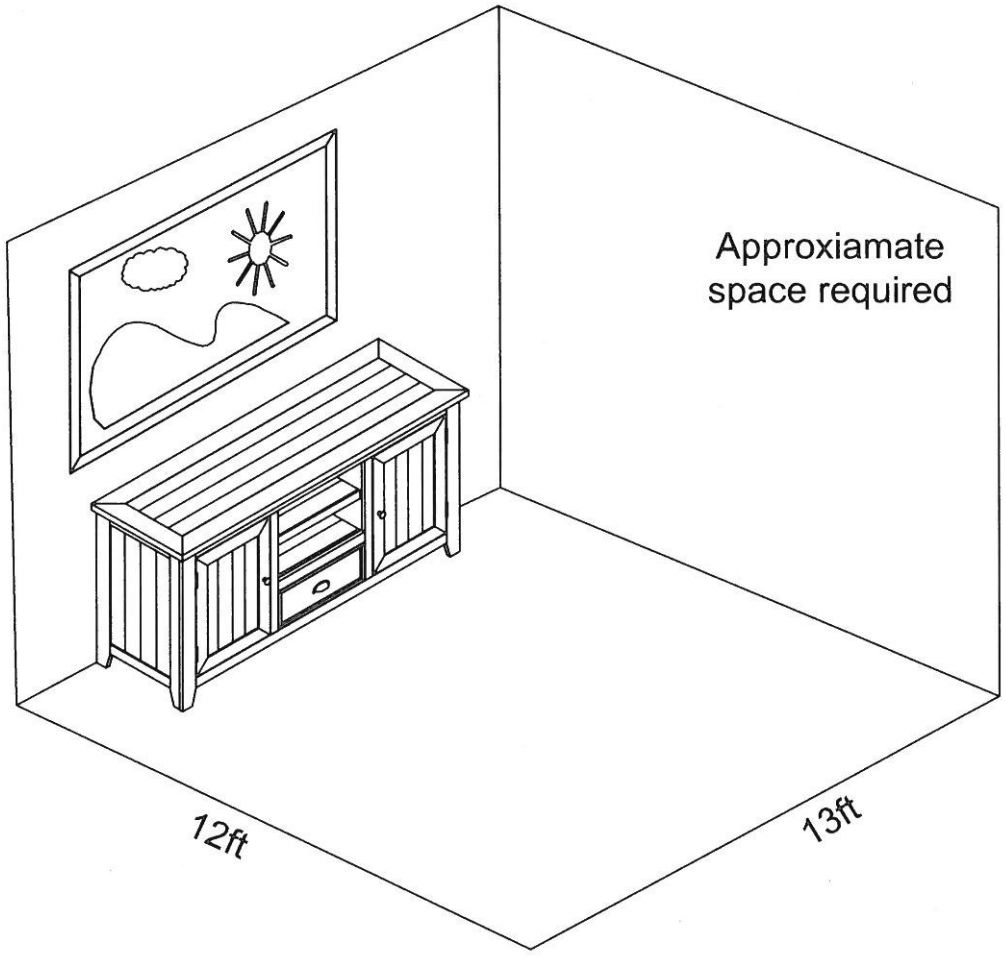

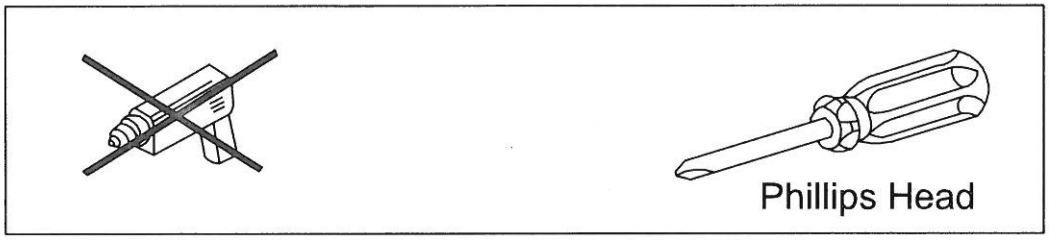

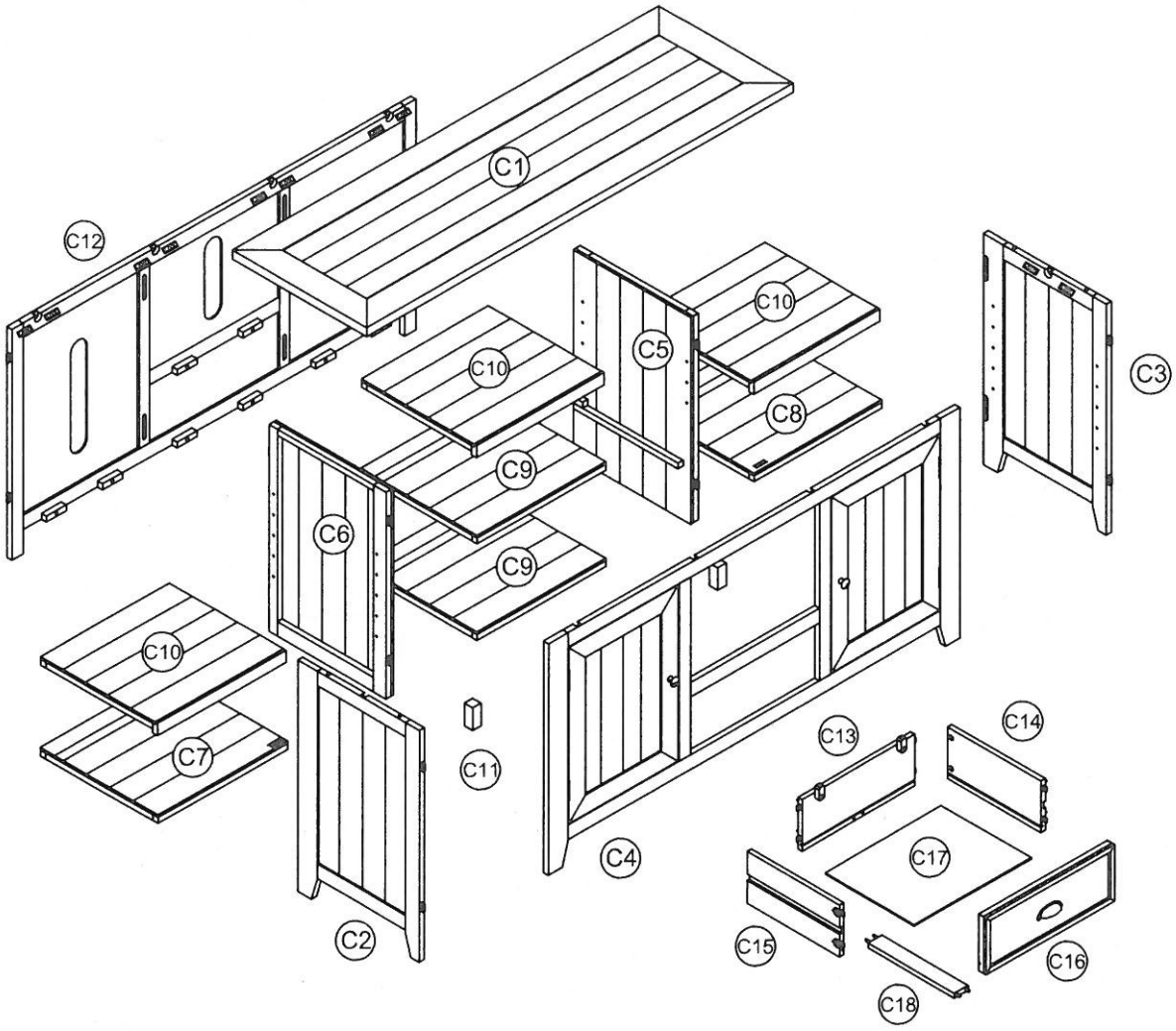

A	B	C	D	E
			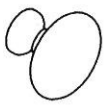	
Ø8x20 (mm) 4pcs	12pcs	Ø3.5x15 (mm) 12pcs	2 pcs	Ø4x25 (mm) 2pcs

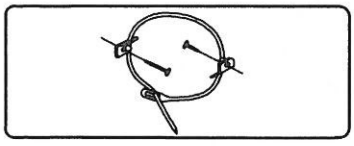

ANTI-TIP SET

1

- Please lay all components on smooth flat surface to prevent scratches
- Use the EPE foam to protect the plastic hardware before assembly

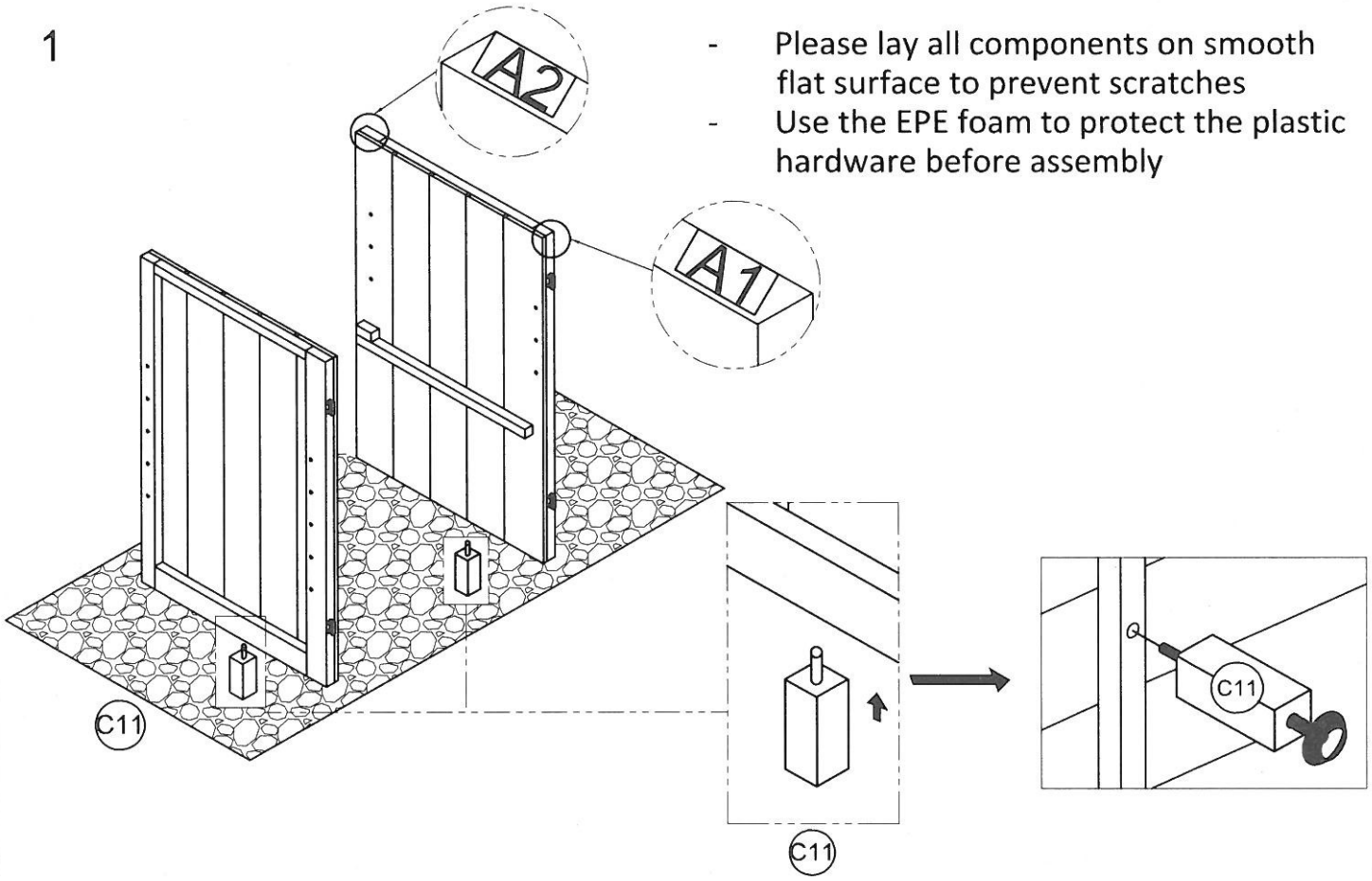

2

To assemble the two interior partitions (C5), (C6) please note the drawer slides must face each other internally.

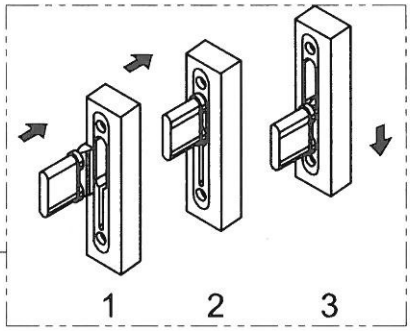

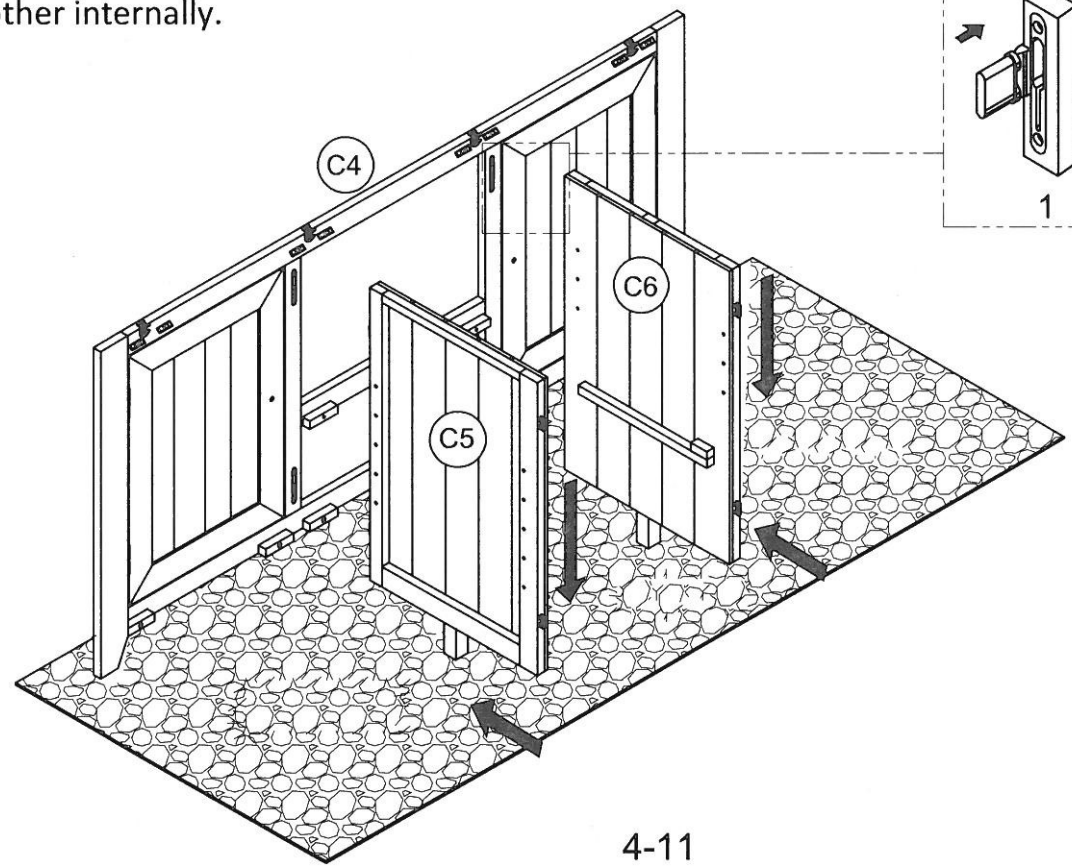

3

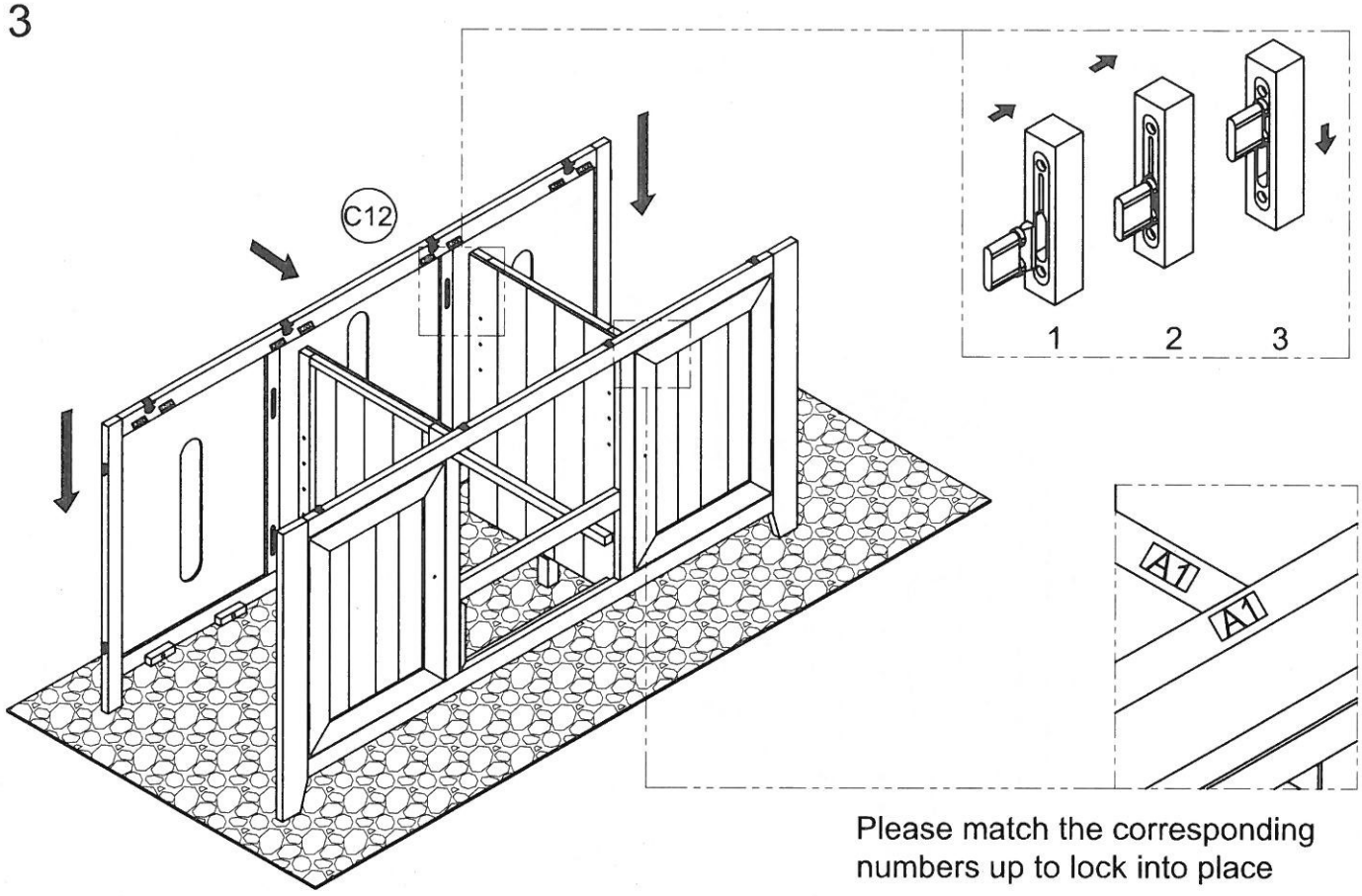

Please match the corresponding numbers up to lock into place

4

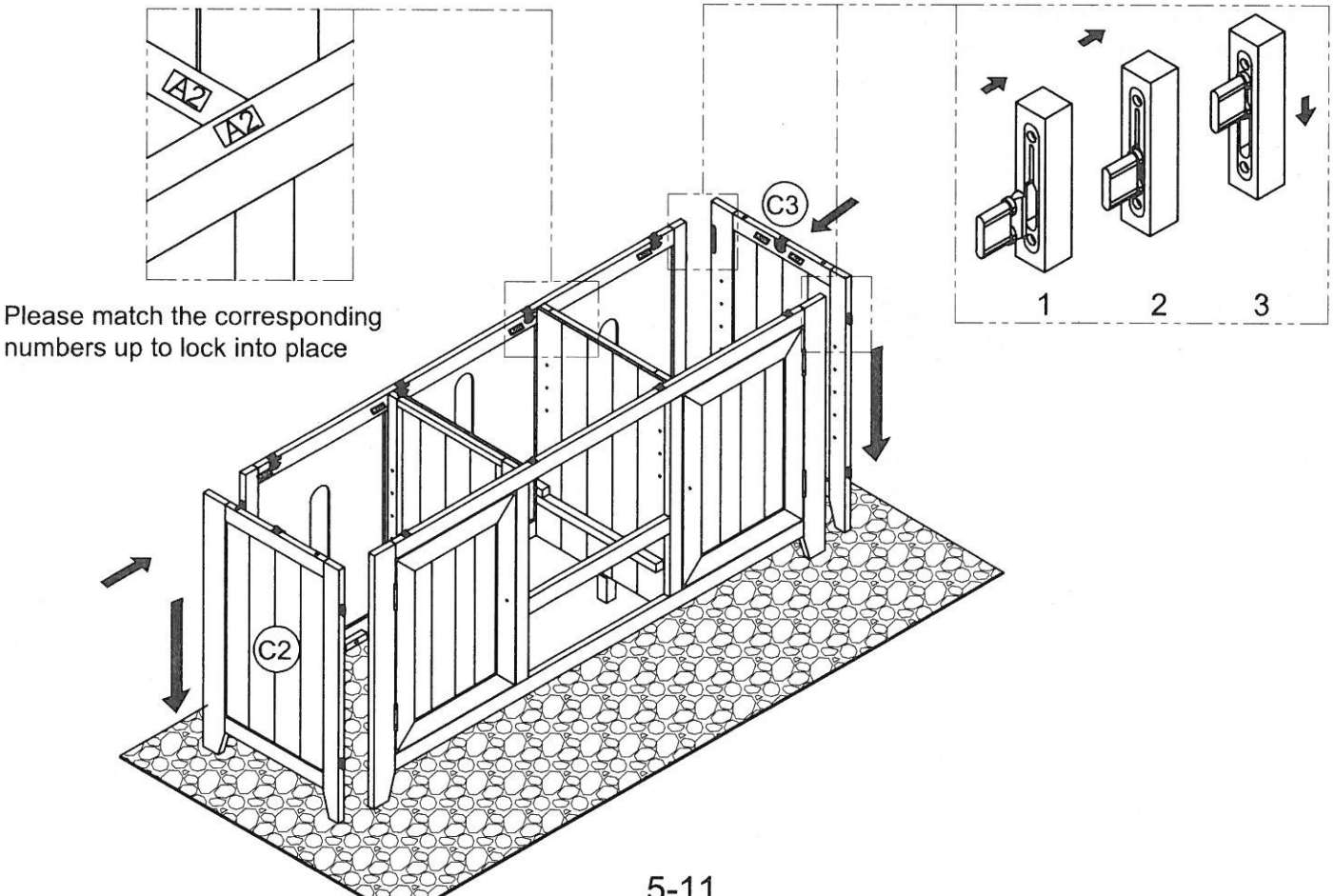

Please match the corresponding numbers up to lock into place

5

Place one panel (C9) into bottom of stand and lay flush on cleats

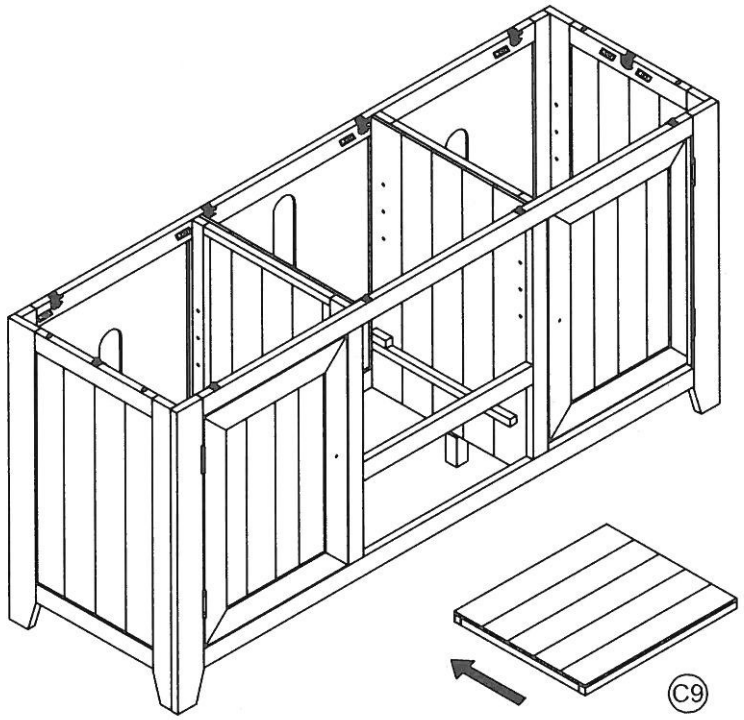

6

Place one panel (C9) on top of cleats above drawer slides creating an area for drawer

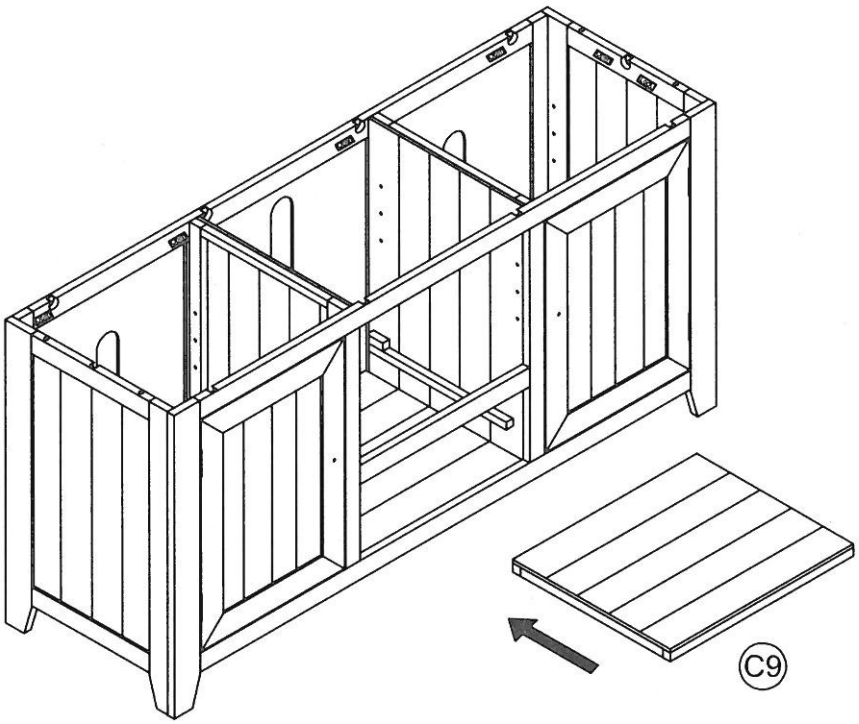

7

Place (C7) and (C8) panels into correct position by laying flush on top of cleats

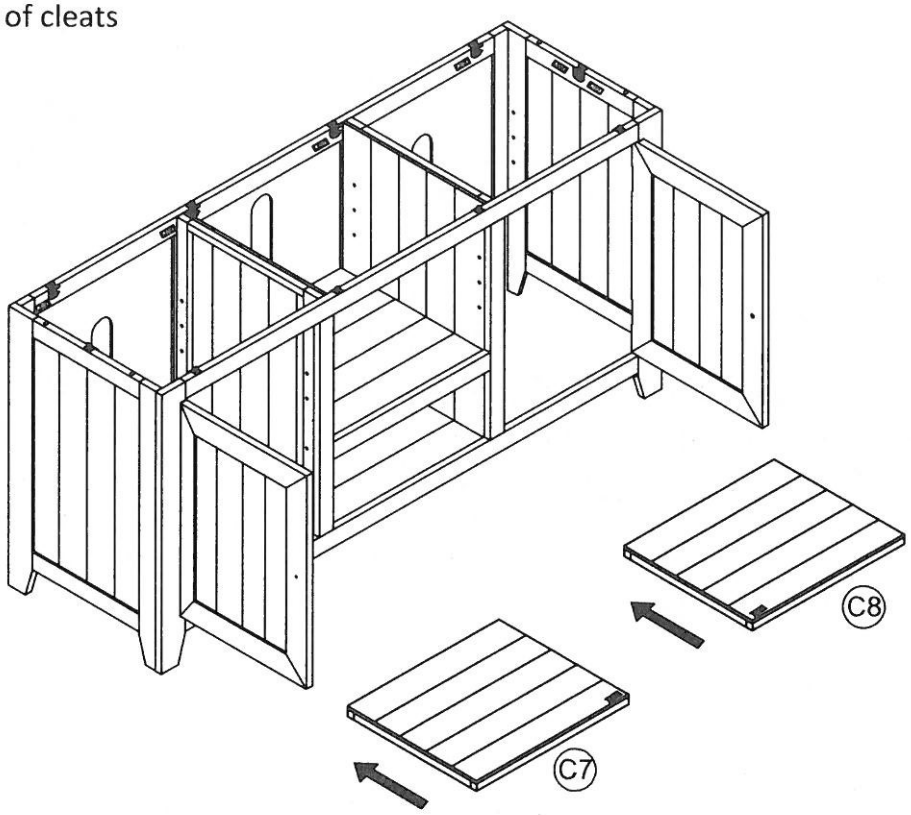

8

Bx12	Cx12

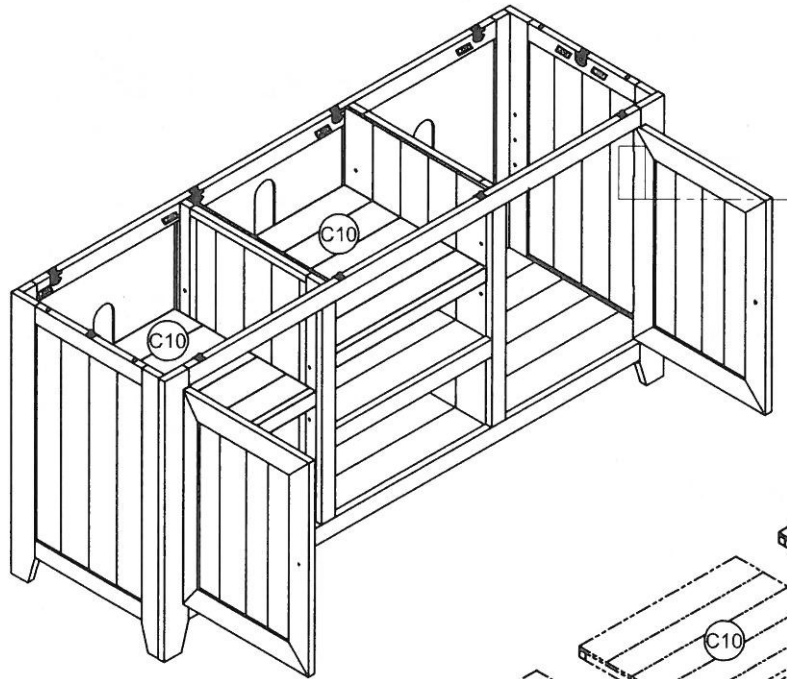

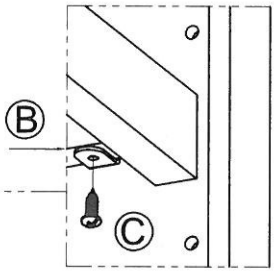

Ensure that side rail support is positioned under wood molding

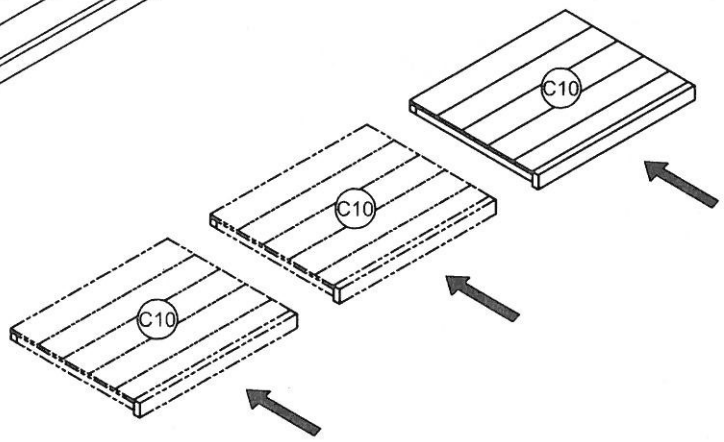

9

Ax4

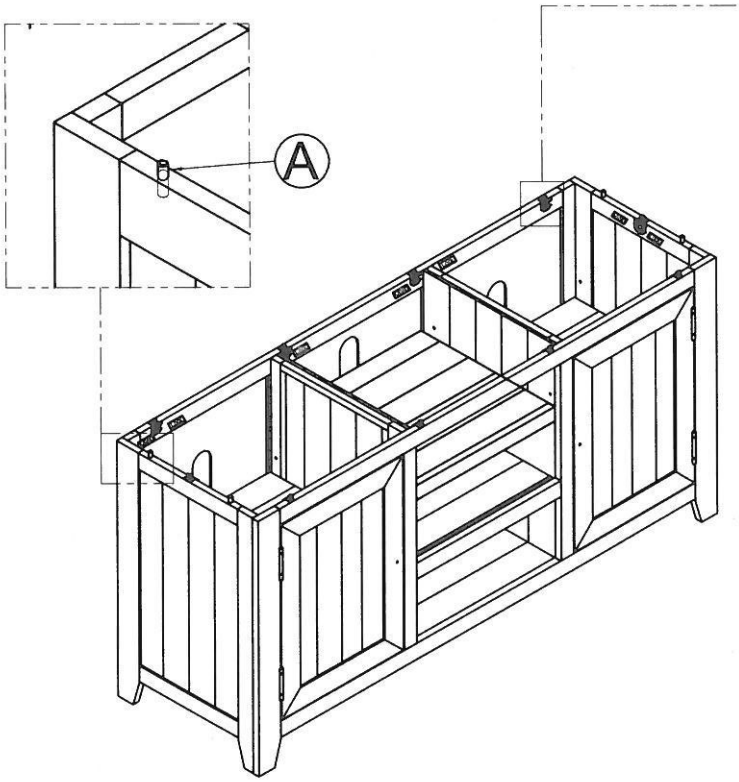

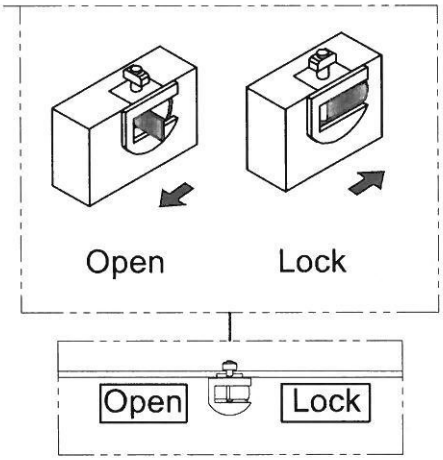

Make sure all latches are in the open position before installing Top Panel (C1)

10

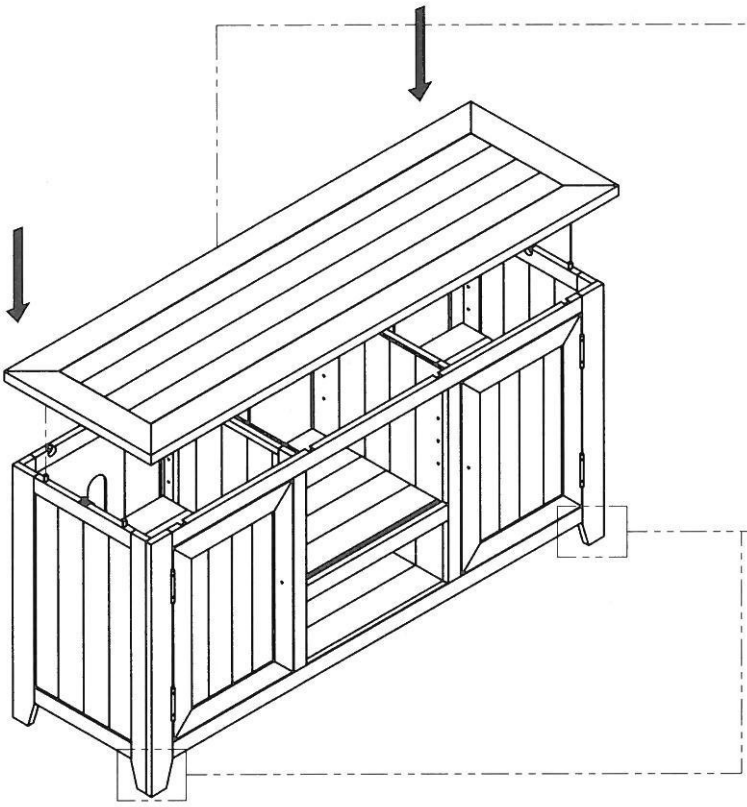

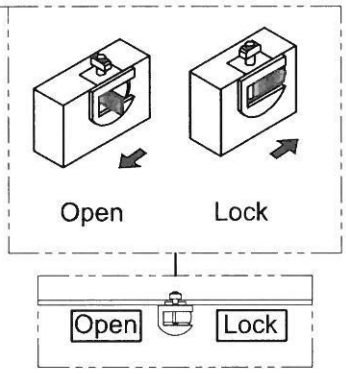

Make sure all 10 latches are in the locked position

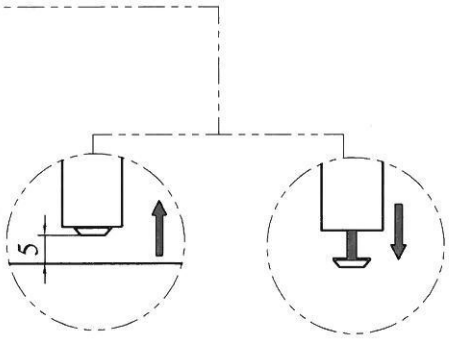

Adjustable Leveler Instructions

11

Drawer construction steps

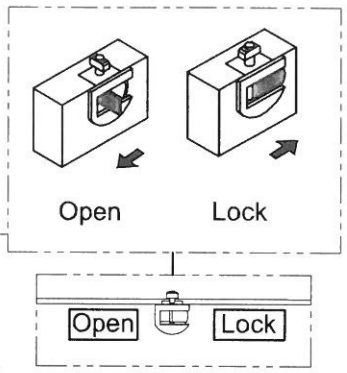

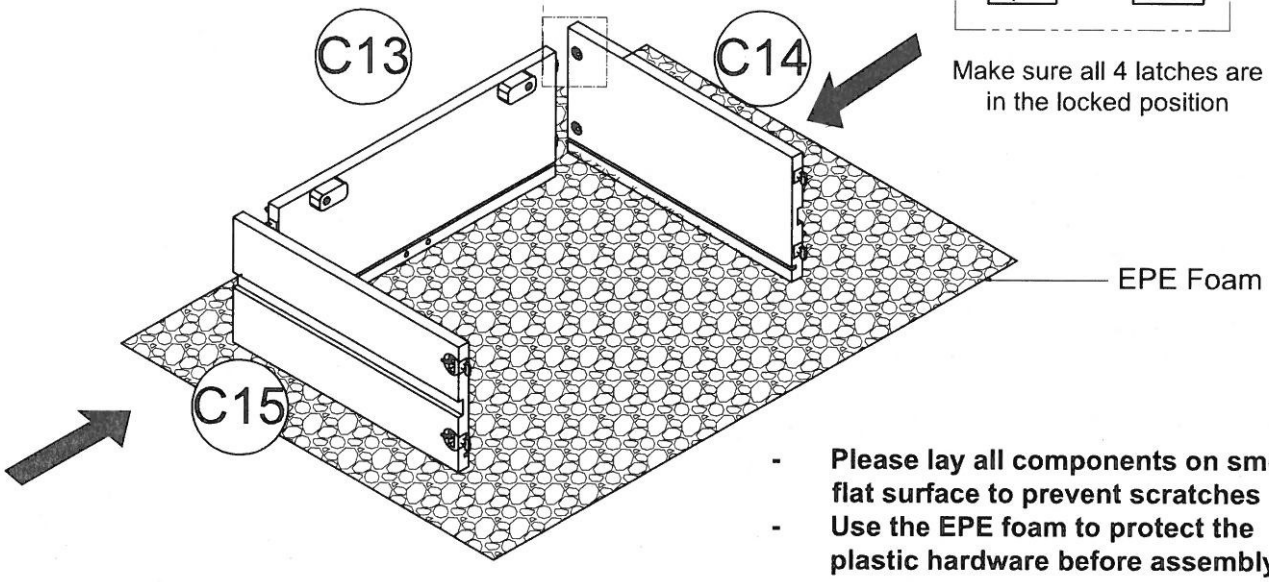

Make sure all 4 latches are in the locked position

- **Please lay all components on smooth flat surface to prevent scratches**
- **Use the EPE foam to protect the plastic hardware before assembly**

12

Slide (C17) drawer bottom into slot, then attach (C18) into position

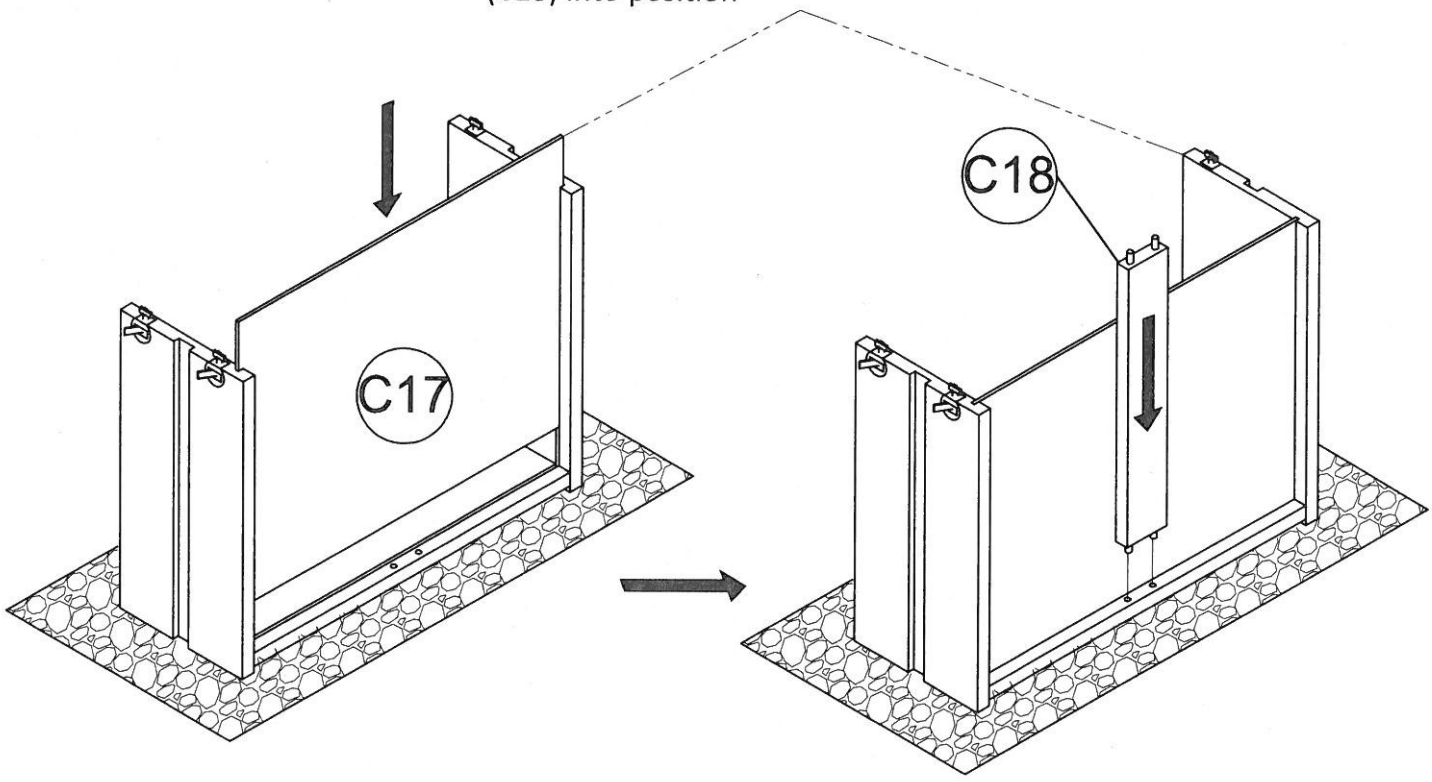

13

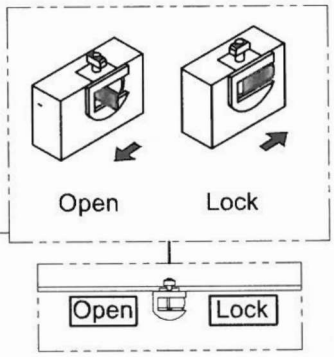

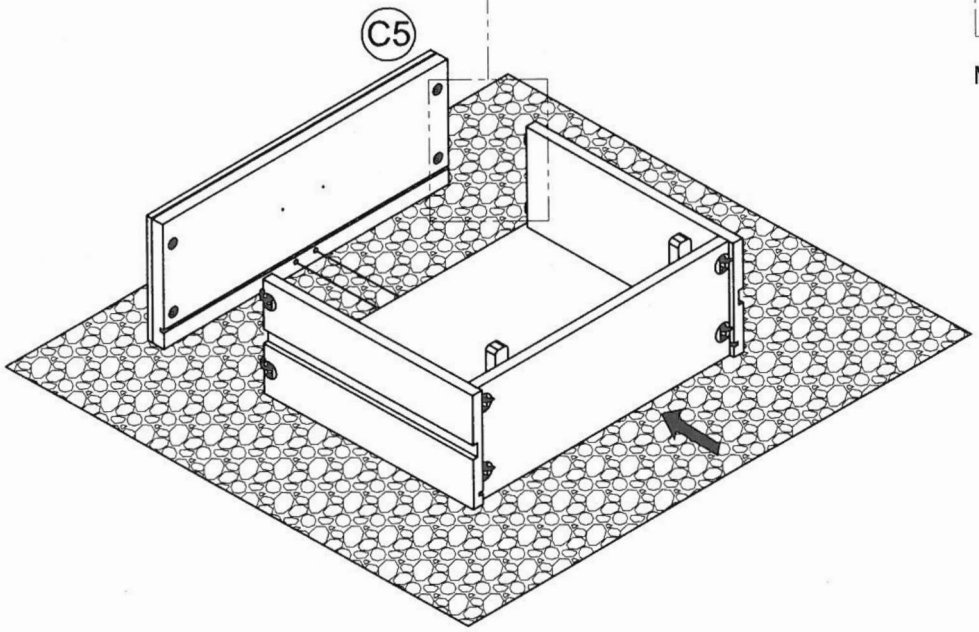

Make sure all 4 latches are in the locked position

14

Flip latches up in order to secure drawer from sliding out

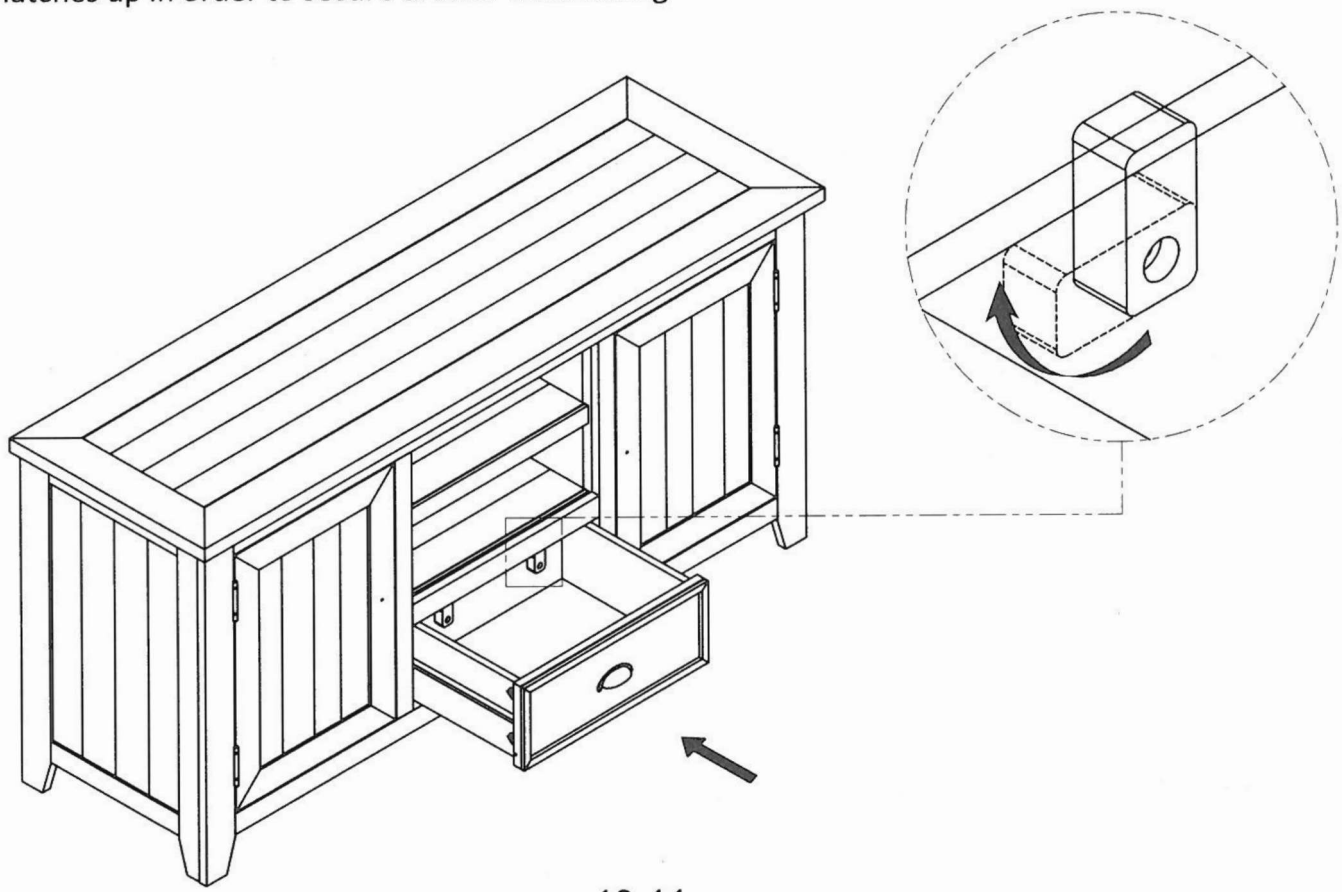

15

DX2	EX2

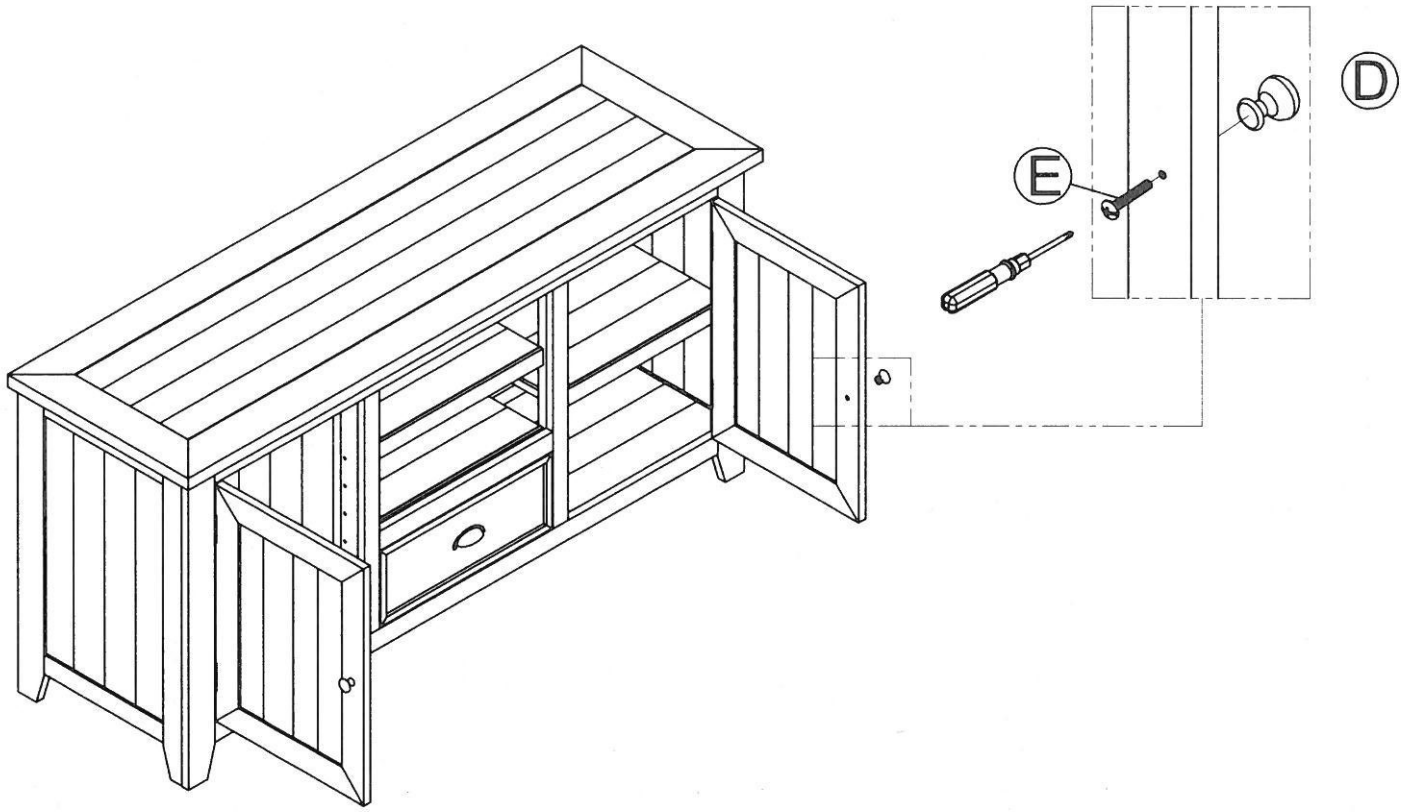

16

