MODEL G0568/G0569
24" INDUSTRIAL BANDSAW
OWNER'S MANUAL
(For models manufactured since 10/11)

COPYRIGHT © AUGUST, 2004 BY GRIZZLY INDUSTRIAL, INC. REVISED NOVEMBER, 2018 (JL)
WARNING: NO PORTION OF THIS MANUAL MAY BE REPRODUCED IN ANY SHAPE OR FORM WITHOUT THE WRITTEN APPROVAL OF GRIZZLY INDUSTRIAL, INC.
CA6450# PRINTED IN TAIWAN V2.11.18

⚠ WARNING!

This manual provides critical safety instructions on the proper setup, operation, maintenance, and service of this machine/tool. Save this document, refer to it often, and use it to instruct other operators.

Failure to read, understand and follow the instructions in this manual may result in fire or serious personal injury—including amputation, electrocution, or death.

The owner of this machine/tool is solely responsible for its safe use. This responsibility includes but is not limited to proper installation in a safe environment, personnel training and usage authorization, proper inspection and maintenance, manual availability and comprehension, application of safety devices, cutting/sanding/grinding tool integrity, and the usage of personal protective equipment.

The manufacturer will not be held liable for injury or property damage from negligence, improper training, machine modifications or misuse.

⚠ WARNING!

Some dust created by power sanding, sawing, grinding, drilling, and other construction activities contains chemicals known to the State of California to cause cancer, birth defects or other reproductive harm. Some examples of these chemicals are:

- **Lead from lead-based paints.**
- **Crystalline silica from bricks, cement and other masonry products.**
- **Arsenic and chromium from chemically-treated lumber.**

Your risk from these exposures varies, depending on how often you do this type of work. To reduce your exposure to these chemicals: Work in a well ventilated area, and work with approved safety equipment, such as those dust masks that are specially designed to filter out microscopic particles.

Table of Contents

INTRODUCTION 2
Contact Info 2
Machine Description 2
Manual Accuracy 2
Identification 3
Controls & Components 4
G0568 Machine Data Sheet 7
G0569 Machine Data Sheet 9

SECTION 1: SAFETY 11
Safety Instructions for Machinery 11
Additional Safety for Bandsaws 13

SECTION 2: POWER SUPPLY 14
440V Conversion 16

SECTION 3: SETUP 17
Needed for Setup 17
Unpacking 17
Inventory 18
Hardware Recognition Chart 19
Cleanup 20
Site Considerations 21
Lifting & Placing 22
Anchoring to Floor 23
Riser Blocks 23
Assembly 24
Dust Collection 25
Blade Tracking 25
Power Connection 27
Test Run 28
Adjusting Table Stop 30
Table Tilt Calibration 30
Aligning Table 31
Aligning Fence 32
Pointer Calibration 33
Miter Gauge 33
Tensioning Blade 34
Adjusting Blade Guide Bearings 34
Adjusting Support Bearings 36

SECTION 4: OPERATIONS 38
Operation Overview 38
Workpiece Inspection 39
Foot Brake 40
Key Switch 40
Guide Post 41
Ripping 41
Crosscutting 42
Resawing 42
Cutting Curves 43
Blade Lead 43
Table Tilt 44
Stacked Cuts 44
Blade Information 45
Blade Changes 47

SECTION 5: ACCESSORIES 48

SECTION 6: MAINTENANCE 50
Schedule 50
Cleaning 50
Unpainted Cast Iron 50
Wheel Brushes 50
Lubrication 50

SECTION 7: SERVICE 53
Troubleshooting 53
Checking and Tensioning V-Belts 57
Replacing V-Belt 58
Adjusting Wheel and Blade Brushes 58
Adjusting Tension Lever 59
Adjusting Guide Post Travel 59
Wheel Alignment 62

SECTION 8: WIRING 64
Wiring Safety Instructions 64
G0568 Wiring Diagram 65
G0569 Wiring Diagram 220V 66
G0569 Wiring Diagram 440V 67

SECTION 9: PARTS 68
Main 68
Table 71
Guide Post 72
Blade Guides 73
Label Placement 74

WARRANTY & RETURNS 77

INTRODUCTION

Contact Info

We stand behind our machines! If you have questions or need help, contact us with the information below. Before contacting, make sure you get the **serial number** and **manufacture date** from the machine ID label. This will help us help you faster.

Grizzly Technical Support
1815 W. Battlefield
Springfield, MO 65807
Phone: (570) 546-9663
Email: techsupport@grizzly.com

We want your feedback on this manual. What did you like about it? Where could it be improved? Please take a few minutes to give us feedback.

Grizzly Documentation Manager
P.O. Box 2069
Bellingham, WA 98227-2069
Email: manuals@grizzly.com

Machine Description

The bandsaw is a versatile cutting tool that can be used to perform a wide variety of cuts in wood workpieces.

The bandsaw features a flexible steel band with teeth on one edge that fits around two wheels, which rotate during operation to drive the blade.

When a workpiece is pushed against the moving blade, the downward force of the blade teeth scrape across the workpiece and, in effect, cut it. Blade guides on both sides of the cutting area keep the blade from flexing or being pushed off the wheels from the horizontal pressure of the workpiece while cutting.

Manual Accuracy

We are proud to provide a high-quality owner's manual with your new machine!

We made every effort to be exact with the instructions, specifications, drawings, and photographs in this manual. Sometimes we make mistakes, but our policy of continuous improvement also means that **sometimes the machine you receive is slightly different than shown in the manual**.

If you find this to be the case, and the difference between the manual and machine leaves you confused or unsure about something, check our website for an updated version. We post current manuals and manual updates for free on our website at **www.grizzly.com**.

Alternatively, you can call our Technical Support for help. Before calling, make sure you write down the **Manufacture Date** and **Serial Number** from the machine ID label (see below). This information is required for us to provide proper tech support, and it helps us determine if updated documentation is available for your machine.

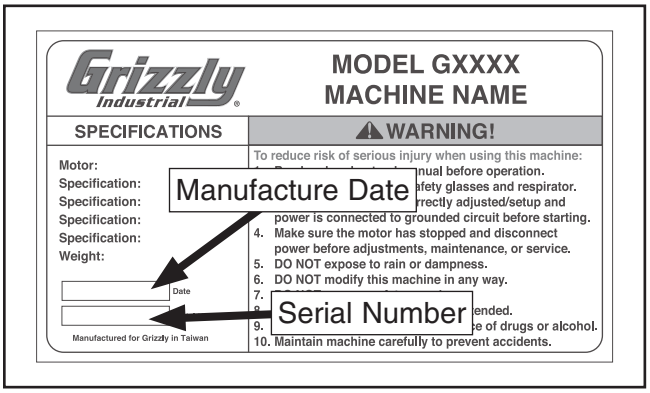

Identification

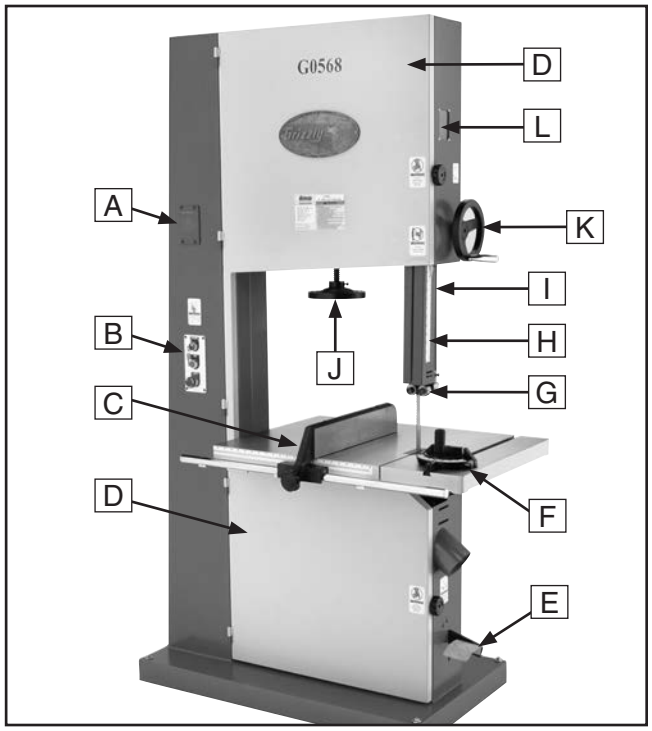

Figure 1. G0658 front view.

A. Blade Tension Indicator
B. Key Switch, Start & Stop Buttons
C. Rip Fence
D. Hinged Wheel Covers
E. Foot Brake
F. Miter Gauge
G. Ball Bearing Blade Guides
H. Cutting Height Scale
I. Guide Post
J. Blade Tension Handwheel
K. Guide Post Handwheel
L. Blade Tracking Window

⚠ CAUTION

For Your Own Safety, Read Instruction Manual Before Operating Saw.

a) Wear eye protection.
b) Do not remove jammed cutoff pieces until blade has stopped.
c) Maintain proper adjustment of blade tension, blade guides, and thrust bearings.
d) Adjust upper guide to just clear workpiece.
e) Hold workpiece firmly against table.

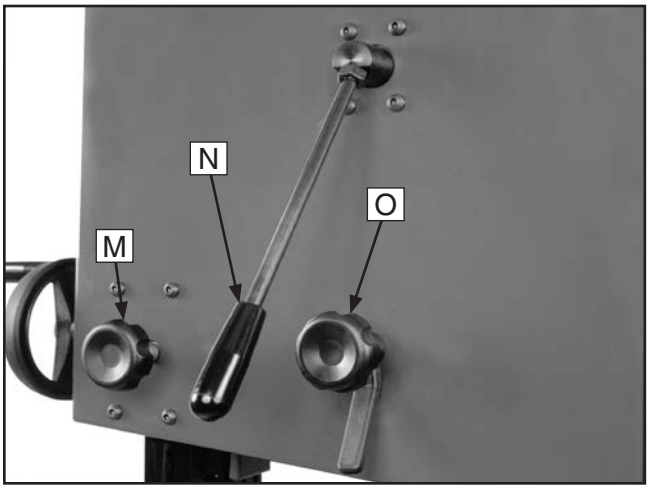

Figure 2. G0568 rear, top-side of the bandsaw.

M. Guide Post Lock Knob
N. Blade Tension Lever
O. Blade Tracking Knob

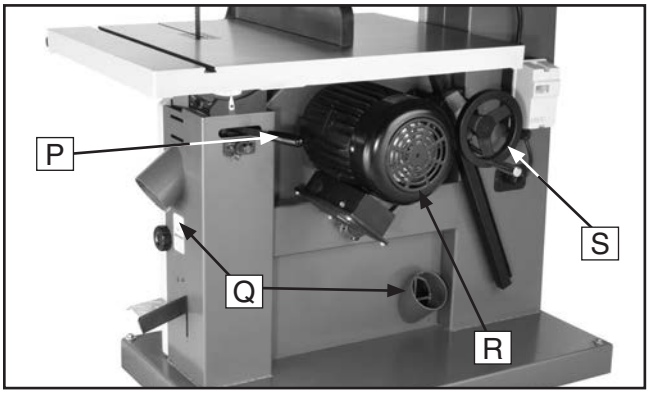

Figure 3. G0568 rear, lower-side of the bandsaw.

P. Table Tilt Lock Lever
Q. 4" Dust Ports
R. Motor
S. Table Tilt Handwheel

⚠ WARNING

Like all machinery, there is potential danger when operating this machine. Accidents are frequently caused by lack of familiarity or failure to pay attention. Use this machine with respect and caution to decrease the risk of operator injury. If normal safety precautions are overlooked or ignored, serious personal injury may occur.

Controls & Components

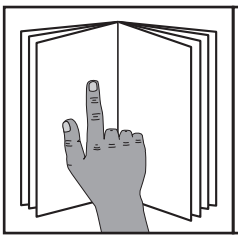

⚠WARNING

To reduce your risk of serious injury, read this entire manual BEFORE using machine.

Refer to **Figures 4–9** and the following descriptions to become familiar with the basic controls and components of this machine. Understanding these items and how they work will help you understand the rest of the manual and stay safe when operating this machine.

Control Panel

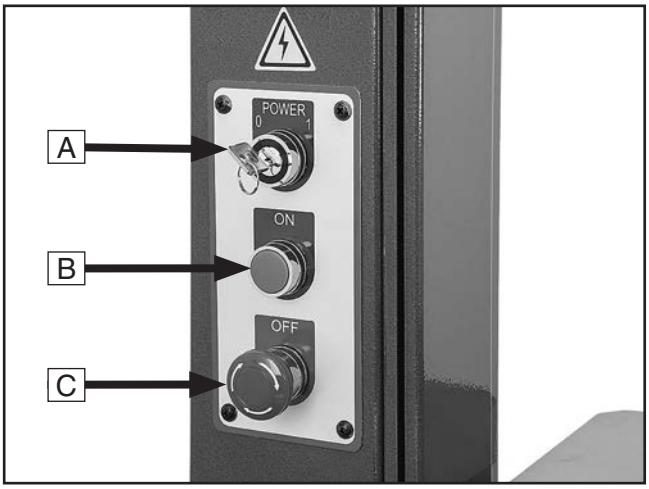

Figure 4. Control panel.

A. Master Power Key Switch: Turns machine power ***ON*** and ***OFF***. Requires key.

B. ON Button: Press to turn motor ***ON***.

C. Emergency Stop/OFF Button: Turns motor ***OFF*** when pressed. Motor will not start until switch is reset. Twist clockwise to reset.

Blade Tension & Tracking

Figure 5. Blade tension handwheel, tension scale, and tracking window.

D. Blade Tension Scale: Displays blade tension using numbers 0–38. Use only for reference purposes after you have found proper tension for the installed blade.

E. Blade Tracking Window: Use to monitor/adjust blade tracking without opening wheel cover (refer to **Page 25** for more information).

F. Blade Tension Handwheel: Increases/decreases blade tension (refer to **Page 34** for more information).

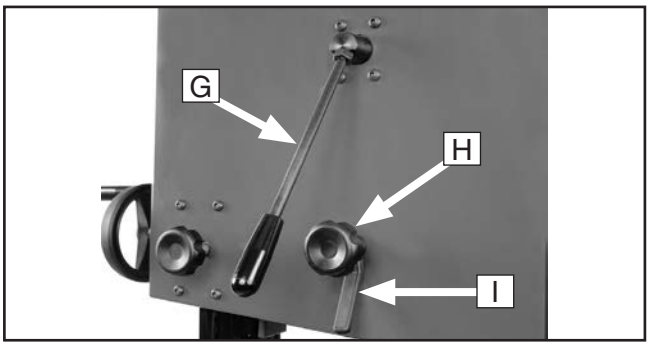

Figure 6. Blade tracking controls and blade tension quick-release lever.

G. Blade Tension Quick-Release Lever: Quickly releases blade tension to speed up blade changes and prevent unnecessary wear on blade and saw components when not in use. Move UP to quickly release blade tension. Move DOWN to re-tension blade.

H. Tracking Control Knob: Adjusts tilt position of upper wheel to set/control blade tracking (refer to **Page 25** for more information).

I. Tracking Control Lock Lever: Secures position of blade tracking control knob.

Guide Post

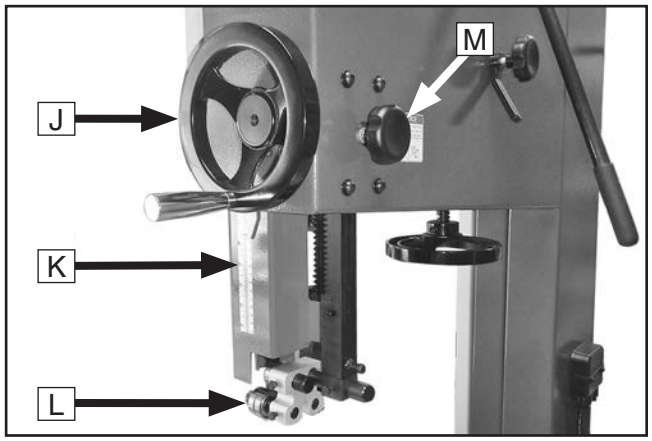

Figure 7. Guide post controls.

J. Guide Post Handwheel: Adjusts height of guide post above workpiece, using a rack-and-pinion system.

K. Guide Post w/Scale: Houses upper blade guides and support bearing, and shields operator from upper portion of blade. Adjusts up or down as necessary to position upper blade guides/support bearing as close as possible to workpiece for maximum cutting accuracy and minimum blade exposure to operator. Scale on side of guide post indicates height of upper blade guide above table.

L. Upper Blade Guide & Support Bearing: Support blade above workpiece during operations.

M. Guide Post Lock Knob: Secures guide post in position after adjustment.

Lower Wheel Adjustment

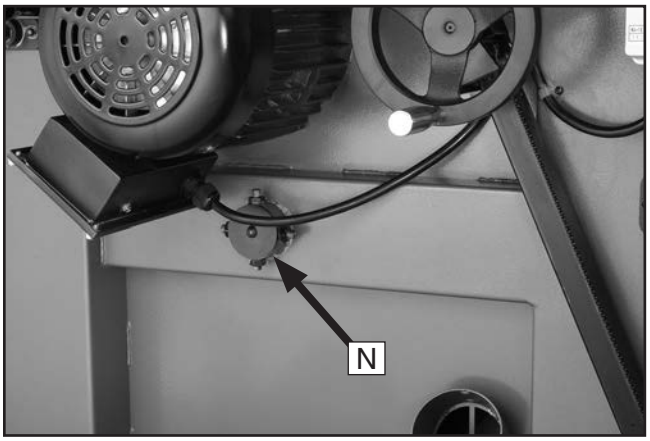

Figure 8. Lower wheel adjustment controls.

N. Lower Wheel Adjustment Hub: Adjusts position of lower wheel to upper wheel if coplanar adjustments become necessary (refer to **Page 63** for more information).

IMPORTANT: *The wheels are set coplanar at the factory, so we strongly recommend you avoid making adjustments here unless it is absolutely necessary.*

Foot Brake

Figure 9. Location of foot brake.

O. Foot Brake: Stops blade wheels and turns motor ***OFF***.

IMPORTANT: *After the foot brake is pressed, press the ON button to restart the machine. The Emergency Stop button does not have to be reset.*

Table Tilt

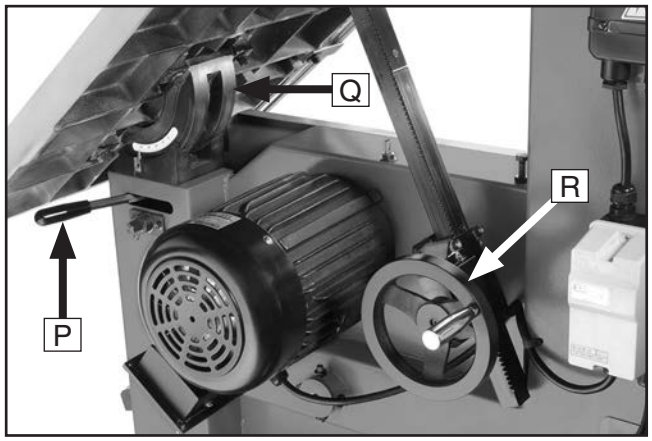

Figure 10. Table tilt controls.

P. Table Tilt Lock Lever: Secures table tilt position on trunnion. Must be loosened before table tilt is adjusted.

Q. Trunnion w/Table Tilt Scale: Functions as a tilting base for table. Graduated in degrees from 0° left–45° right for setting bevel angle.

R. Table Tilt Handwheel: Adjusts angle of table tilt.

Fence & Miter Gauge

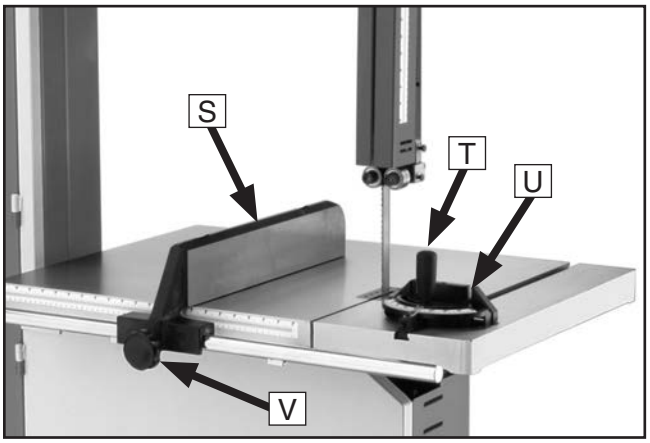

Figure 11. Fence and miter gauge controls.

S. Fence: Used for ripping. Distance from blade determines width of cut.

T. Miter Gauge Lock Knob: Secures angle position of miter gauge.

U. Miter Gauge: Typically used for cross cuts. Adjustable from 0°–60° left or right, and has stops at 45°L and 45°R.

V. Fence Lock Handle: Secures fence position.

MACHINE DATA SHEET

Customer Service #: (570) 546-9663 · To Order Call: (800) 523-4777 · Fax #: (800) 438-5901

MODEL G0568 24" INDUSTRIAL BANDSAW 5 HP SINGLE-PHASE

Product Dimensions:

Weight	836 lbs.
Width (side-to-side) x Depth (front-to-back) x Height	48 x 32 x 83-1/2 in.
Footprint (Length x Width)	41-3/8 x 23-1/2 in.

Shipping Dimensions:

Type	Wood Slat Crate
Content	Machine
Weight	951 lbs.
Length x Width x Height	27 x 45 x 87 in.
Must Ship Upright	Yes

Electrical:

Power Requirement	220V, Single-Phase, 60 Hz
Full-Load Current Rating	23A
Minimum Circuit Size	30A
Power Cord Included	Yes
Power Cord Length	80 in.
Power Cord Gauge	12 AWG
Plug Included	Yes
Included Plug Type	L6-30
Switch Type	Control Panel w/Magnetic Switch Protection & Lockout Key

Motors:

Main

Horsepower	5 HP
Phase	Single-Phase
Amps	23A
Speed	1720 RPM
Type	TEFC Capacitor-Start Induction
Power Transfer	V-Belt Drive
Bearings	Shielded & Permanently Lubricated

Main Specifications:

Main Specifications

Bandsaw Size	24 in.
Max Cutting Width (Left of Blade)	24-1/2 in.
Max Cutting Width (Left of Blade) w/Fence	23-1/4 in.
Max Cutting Height (Resaw Height)	16-1/4 in.
Blade Speeds	5300 FPM

Blade Information

Standard Blade Length	181 in.
Blade Length Range	180 – 181-1/2 in.
Blade Width Range	1/4 – 1-1/2 in.
Type of Blade Guides	Double Ball Bearing
Guide Post Adjustment Type	Rack & Pinion
Has Quick-Release	Yes

Table Information

Table Length	23-5/8 in.
Table Width	33-1/2 in.
Table Thickness	2 in.
Table Tilt	Right 45 deg.
Table Tilt Adjustment Type	Rack & Pinion
Floor-to-Table Height	34-1/2 in.
Fence Locking Position	Front
Fence is Adjustable for Blade Lead	No
Resaw Fence Attachment Included	No
Miter Gauge Included	Yes

Construction Materials

Table	Precision Ground Cast Iron
Trunnion	Cast Iron
Fence	Precision Ground Cast Iron
Base/Stand	Pre-Formed Steel
Frame/Body	Pre-Formed Steel
Wheels	Computer-Balanced Cast Iron
Tire	Rubber
Wheel Cover	Pre-Formed Steel
Paint Type/Finish	Powder Coated

Other Related Information

Wheel Diameter	24-3/4 in.
Wheel Width	1-3/4 in.
Number of Dust Ports	2
Dust Port Size	4 in.
Compatible Mobile Base	D2058A, D2246A

Other Specifications:

Country of Origin	Taiwan
Warranty	1 Year
Approximate Assembly & Setup Time	60 Minutes
Serial Number Location	ID Label
ISO 9001 Factory	Yes
Certified by a Nationally Recognized Testing Laboratory (NRTL)	No

MACHINE DATA SHEET

Customer Service #: (570) 546-9663 · To Order Call: (800) 523-4777 · Fax #: (800) 438-5901

MODEL G0569 24" INDUSTRIAL BANDSAW 7-1/2 HP 3-PHASE

Product Dimensions:

Weight	847 lbs.
Width (side-to-side) x Depth (front-to-back) x Height	48 x 32 x 83-1/2 in.
Footprint (Length x Width)	41-3/8 x 23-1/2 in.

Shipping Dimensions:

Type	Wood Slat Crate
Content	Machine
Weight	962 lbs.
Length x Width x Height	45 x 28 x 87 in.
Must Ship Upright	Yes

Electrical:

Power Requirement	220V or 440V, 3-Phase, 60 Hz
Motor Size	7.5 HP
Prewired Voltage	220V
Full-Load Current Rating	20A at 220V, 10A at 440V
Minimum Circuit Size	30A at 220V, 15A at 440V
Connection Type	Cord at 220V, Permanent at 440V
Power Cord Included	No
Recommended Power Cord	“S”-Type, 3-Wire, 10 AWG, 300 VAC for 220V
Plug Included	No
Recommended Plug Type	L15-30 for 220V
Switch Type	Control Panel w/Magnetic Switch Protection & Lockout Key
Voltage Conversion Kit	G440VG0569 for 440V
Recommended Phase Converter	G5845

Motors:

Main

Horsepower	7.5 HP
Phase	3-Phase
Amps	20A/10A
Speed	1720 RPM
Type	TEFC Induction
Power Transfer	V-Belt Drive
Bearings	Shielded & Permanently Lubricated

Main Specifications:

Main Specifications

Bandsaw Size	24 in.
Max Cutting Width (Left of Blade)	24-1/2 in.
Max Cutting Width (Left of Blade) w/Fence	23-1/4 in.
Max Cutting Height (Resaw Height)	16-1/4 in.
Blade Speeds	5300 FPM

Blade Information

Standard Blade Length	181 in.
Blade Length Range	180 – 181-1/2 in.
Blade Width Range	1/4 – 1-1/2 in.
Type of Blade Guides	Double Ball Bearing
Guide Post Adjustment Type	Rack & Pinion
Has Quick-Release	Yes

Table Information

Table Length	23-5/8 in.
Table Width	33-1/2 in.
Table Thickness	2 in.
Table Tilt	Right 45 deg.
Table Tilt Adjustment Type	Rack & Pinion
Floor-to-Table Height	34-1/2 in.
Fence Locking Position	Front
Fence is Adjustable for Blade Lead	No
Resaw Fence Attachment Included	No
Miter Gauge Included	Yes

Construction Materials

Table	Precision Ground Cast Iron
Trunnion	Cast Iron
Fence	Precision Ground Cast Iron
Base/Stand	Pre-Formed Steel
Frame/Body	Pre-Formed Steel
Wheels	Computer-Balanced Cast Iron
Tire	Rubber
Wheel Cover	Pre-Formed Steel
Paint Type/Finish	Powder Coated

Other Related Information

Wheel Diameter	24-3/4 in.
Wheel Width	1-3/4 in.
Number of Dust Ports	2
Dust Port Size	4 in.
Compatible Mobile Base	D2058A, D2246A

Other Specifications:

Country of Origin	Taiwan
Warranty	1 Year
Approximate Assembly & Setup Time	30 Minutes
Serial Number Location	ID Label
ISO 9001 Factory	Yes
Certified by a Nationally Recognized Testing Laboratory (NRTL)	No

SECTION 1: SAFETY

For Your Own Safety, Read Instruction Manual Before Operating This Machine

The purpose of safety symbols is to attract your attention to possible hazardous conditions. This manual uses a series of symbols and signal words intended to convey the level of importance of the safety messages. The progression of symbols is described below. Remember that safety messages by themselves do not eliminate danger and are not a substitute for proper accident prevention measures. Always use common sense and good judgment.

DANGER — **Indicates an imminently hazardous situation which, if not avoided, WILL result in death or serious injury.**

WARNING — **Indicates a potentially hazardous situation which, if not avoided, COULD result in death or serious injury.**

CAUTION — **Indicates a potentially hazardous situation which, if not avoided, MAY result in minor or moderate injury. It may also be used to alert against unsafe practices.**

NOTICE — **Alerts the user to useful information about proper operation of the machine to avoid machine damage.**

Safety Instructions for Machinery

WARNING

OWNER'S MANUAL. Read and understand this owner's manual BEFORE using machine.

TRAINED OPERATORS ONLY. Untrained operators have a higher risk of being hurt or killed. Only allow trained/supervised people to use this machine. When machine is not being used, disconnect power, remove switch keys, or lock-out machine to prevent unauthorized use—especially around children. Make your workshop kid proof!

DANGEROUS ENVIRONMENTS. Do not use machinery in areas that are wet, cluttered, or have poor lighting. Operating machinery in these areas greatly increases the risk of accidents and injury.

MENTAL ALERTNESS REQUIRED. Full mental alertness is required for safe operation of machinery. Never operate under the influence of drugs or alcohol, when tired, or when distracted.

ELECTRICAL EQUIPMENT INJURY RISKS. You can be shocked, burned, or killed by touching live electrical components or improperly grounded machinery. To reduce this risk, only allow qualified service personnel to do electrical installation or repair work, and always disconnect power before accessing or exposing electrical equipment.

DISCONNECT POWER FIRST. Always disconnect machine from power supply BEFORE making adjustments, changing tooling, or servicing machine. This prevents an injury risk from unintended startup or contact with live electrical components.

EYE PROTECTION. Always wear ANSI-approved safety glasses or a face shield when operating or observing machinery to reduce the risk of eye injury or blindness from flying particles. Everyday eyeglasses are NOT approved safety glasses.

⚠WARNING

WEARING PROPER APPAREL. Do not wear clothing, apparel or jewelry that can become entangled in moving parts. Always tie back or cover long hair. Wear non-slip footwear to reduce risk of slipping and losing control or accidentally contacting cutting tool or moving parts.

HAZARDOUS DUST. Dust created by machinery operations may cause cancer, birth defects, or long-term respiratory damage. Be aware of dust hazards associated with each workpiece material. Always wear a NIOSH-approved respirator to reduce your risk.

HEARING PROTECTION. Always wear hearing protection when operating or observing loud machinery. Extended exposure to this noise without hearing protection can cause permanent hearing loss.

REMOVE ADJUSTING TOOLS. Tools left on machinery can become dangerous projectiles upon startup. Never leave chuck keys, wrenches, or any other tools on machine. Always verify removal before starting!

USE CORRECT TOOL FOR THE JOB. Only use this tool for its intended purpose—do not force it or an attachment to do a job for which it was not designed. Never make unapproved modifications—modifying tool or using it differently than intended may result in malfunction or mechanical failure that can lead to personal injury or death!

AWKWARD POSITIONS. Keep proper footing and balance at all times when operating machine. Do not overreach! Avoid awkward hand positions that make workpiece control difficult or increase the risk of accidental injury.

CHILDREN & BYSTANDERS. Keep children and bystanders at a safe distance from the work area. Stop using machine if they become a distraction.

GUARDS & COVERS. Guards and covers reduce accidental contact with moving parts or flying debris. Make sure they are properly installed, undamaged, and working correctly BEFORE operating machine.

FORCING MACHINERY. Do not force machine. It will do the job safer and better at the rate for which it was designed.

NEVER STAND ON MACHINE. Serious injury may occur if machine is tipped or if the cutting tool is unintentionally contacted.

STABLE MACHINE. Unexpected movement during operation greatly increases risk of injury or loss of control. Before starting, verify machine is stable and mobile base (if used) is locked.

USE RECOMMENDED ACCESSORIES. Consult this owner's manual or the manufacturer for recommended accessories. Using improper accessories will increase the risk of serious injury.

UNATTENDED OPERATION. To reduce the risk of accidental injury, turn machine ***OFF*** and ensure all moving parts completely stop before walking away. Never leave machine running while unattended.

MAINTAIN WITH CARE. Follow all maintenance instructions and lubrication schedules to keep machine in good working condition. A machine that is improperly maintained could malfunction, leading to serious personal injury or death.

DAMAGED PARTS. Regularly inspect machine for damaged, loose, or mis-adjusted parts—or any condition that could affect safe operation. Immediately repair/replace BEFORE operating machine. For your own safety, DO NOT operate machine with damaged parts!

MAINTAIN POWER CORDS. When disconnecting cord-connected machines from power, grab and pull the plug—NOT the cord. Pulling the cord may damage the wires inside. Do not handle cord/plug with wet hands. Avoid cord damage by keeping it away from heated surfaces, high traffic areas, harsh chemicals, and wet/damp locations.

EXPERIENCING DIFFICULTIES. If at any time you experience difficulties performing the intended operation, stop using the machine! Contact our Technical Support at (570) 546-9663.

Additional Safety for Bandsaws

⚠WARNING

Serious cuts, amputation, or death can occur from contact with the moving saw blade during operation or if blade breakage occurs. To reduce this risk, anyone operating this machine MUST completely heed the hazards and warnings below.

HAND PLACEMENT. Placing hands or fingers in line with blade during operation may result in serious injury if hands slip or workpiece moves unexpectedly. Do not position fingers or hands in line with blade, and never reach under table while blade is moving.

SMALL/NARROW WORKPIECES. If hands slip during a cut while holding small workpieces with fingers, serious personal injury could occur. Always support/feed small or narrow workpieces with push sticks, push blocks, jig, vise, or some type of clamping fixture.

BLADE SPEED. Cutting workpiece before blade is at full speed could cause blade to grab workpiece and pull hands into blade. Allow blade to reach full speed before starting cut. DO NOT start machine with workpiece contacting blade.

FEED RATE. To avoid risk of workpiece slipping and causing operator injury, always feed stock evenly and smoothly.

BLADE CONDITION. Dull blades require more effort to perform cut, increasing risk of accidents. Do not operate with dirty, dull, cracked or badly worn blades. Inspect blades for cracks and missing teeth before each use. Always maintain proper blade tension and tracking while operating.

CLEARING JAMS AND CUTOFFS. Always stop bandsaw and disconnect power before clearing scrap pieces that get stuck between blade and table insert. Use brush or push stick, not hands, to clean chips/cutoff scraps from table.

BLADE CONTROL. To avoid risk of injury due to blade contact, always allow blade to stop on its own. DO NOT try to stop or slow blade with your hand or the workpiece.

GUARDS/COVERS. Blade guards and covers protect operator from the moving bandsaw blade. The wheel covers protect operator from getting entangled with rotating wheels or other moving parts. ONLY operate this bandsaw with blade guard in proper position and wheel covers completely closed.

BLADE REPLACEMENT. To avoid mishaps that could result in operator injury, make sure blade teeth face down toward table and blade is properly tensioned and tracked before operating.

UPPER BLADE GUIDE SUPPORT. To reduce exposure of operator to blade and provide maximum blade support while cutting, keep upper blade guides adjusted to just clear workpiece.

CUTTING TECHNIQUES. To avoid blade getting pulled off wheels or accidentally breaking and striking operator, always turn bandsaw ***OFF*** and wait for blade to come to a complete stop before backing workpiece out of blade. DO NOT back workpiece away from blade while bandsaw is running. DO NOT force or twist blade while cutting, especially when sawing small curves. This could result in blade damage or breakage.

WORKPIECE SUPPORT. To maintain maximum control and reduce risk of blade contact/breakage, always ensure adequate support of long/large workpieces. Always keep workpiece flat and firm against table/fence when cutting to avoid loss of control. If necessary, use a jig or other workholding device.

WORKPIECE MATERIAL. This machine is intended for cutting natural and man-made wood products, and laminate covered wood products. This machine is NOT designed to cut metal, glass, stone, tile, etc.

SECTION 2: POWER SUPPLY

Availability

Before installing the machine, consider the availability and proximity of the required power supply circuit. If an existing circuit does not meet the requirements for this machine, a new circuit must be installed. To minimize the risk of electrocution, fire, or equipment damage, installation work and electrical wiring must be done by an electrician or qualified service personnel in accordance with all applicable codes and standards.

WARNING

Electrocution, fire, shock, or equipment damage may occur if machine is not properly grounded and connected to power supply.

Full-Load Current Rating

The full-load current rating is the amperage a machine draws at 100% of the rated output power. On machines with multiple motors, this is the amperage drawn by the largest motor or sum of all motors and electrical devices that might operate at one time during normal operations.

G0568
Full-Load Current Rating at 220V ..... 23 Amps
G0569
Full-Load Current Rating at 220V ..... 20 Amps
G0569
Full-Load Current Rating at 440V ..... 10 Amps

The full-load current is not the maximum amount of amps that the machine will draw. If the machine is overloaded, it will draw additional amps beyond the full-load rating.

If the machine is overloaded for a sufficient length of time, damage, overheating, or fire may result—especially if connected to an undersized circuit. To reduce the risk of these hazards, avoid overloading the machine during operation and make sure it is connected to a power supply circuit that meets the specified circuit requirements.

Circuit Information

A power supply circuit includes all electrical equipment between the breaker box or fuse panel in the building and the machine. The power supply circuit used for this machine must be sized to safely handle the full-load current drawn from the machine for an extended period of time. (If this machine is connected to a circuit protected by fuses, use a time delay fuse marked D.)

CAUTION

For your own safety and protection of property, consult an electrician if you are unsure about wiring practices or electrical codes in your area.

Note: *Circuit requirements in this manual apply to a dedicated circuit—where only one machine will be running on the circuit at a time. If machine will be connected to a shared circuit where multiple machines may be running at the same time, consult an electrician or qualified service personnel to ensure circuit is properly sized for safe operation.*

Circuit Requirements for G0568

This machine is prewired to operate on a power supply circuit that has a verified ground and meets the following requirements:

Nominal Voltage 220V, 230V, 240V
Cycle ..... 60 Hz
Phase 1-Phase
Power Supply Circuit ..... 30 Amps

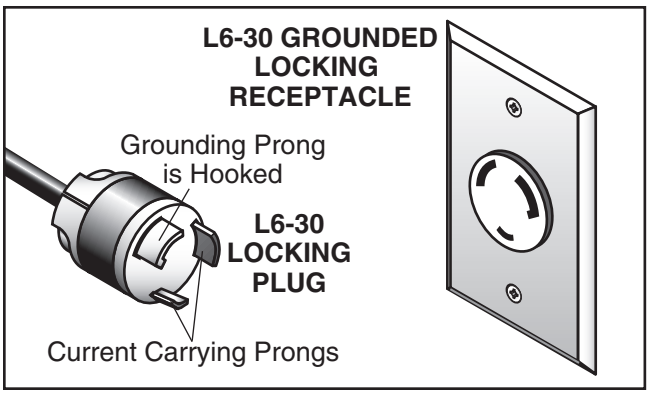

Figure 12. Typical L6-30 plug and receptacle.

Circuit Requirements for G0569 @ 220V

This machine can be converted to operate on a power supply circuit that has a verified ground and meets the requirements listed below. (Refer to **Voltage Conversion** instructions for details.)

Nominal Voltage 220V, 230V, 240V
Cycle .....60 Hz
Phase 3-Phase
Power Supply Circuit ..... 30 Amps

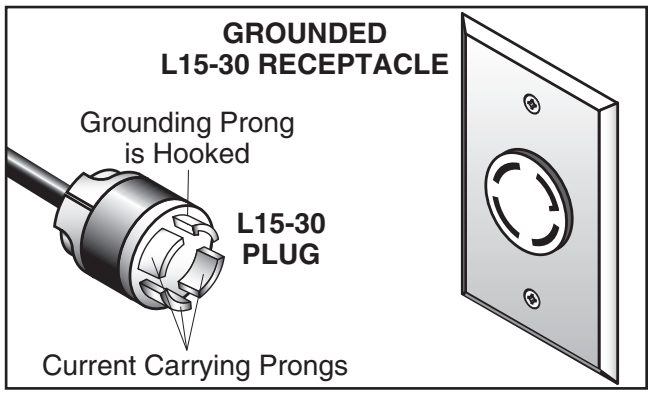

Figure 13. Typical L15-30 plug and receptacle.

⚠WARNING

Serious injury could occur if you connect machine to power before completing setup process. DO NOT connect to power until instructed later in this manual.

⚠CAUTION

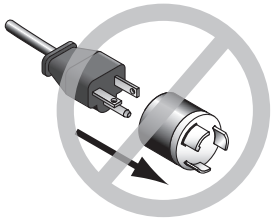

No adapter should be used with plug. If plug does not fit available receptacle, or if machine must be reconnected for use on a different type of circuit, reconnection must be performed by an electrician or qualified service personnel, and it must comply with all local codes and ordinances.

Extension Cords

We do not recommend using an extension cord with this machine. If you must use an extension cord, only use it if absolutely necessary and only on a temporary basis.

Extension cords cause voltage drop, which can damage electrical components and shorten motor life. Voltage drop increases as the extension cord size gets longer and the gauge size gets smaller (higher gauge numbers indicate smaller sizes).

Any extension cord used with this machine must be in good condition and contain a ground wire and matching plug/receptacle. Additionally, it must meet the following size requirements:

Minimum Gauge Size .....12 AWG
Maximum Length (Shorter is Better).....50 ft.

Voltage Conversion

The voltage conversion MUST be performed by a qualified electrician. To perform the voltage conversion, install the correct plug and rewire the motor to the new voltage, according to the provided wiring diagram. *If the diagram included on the motor conflicts with the one in this manual, the motor may have changed since the manual was printed. Use the diagram provided on the motor.*

Circuit Requirements for G0569 @ 440V

This machine can be converted to operate on a power supply circuit that has a verified ground and meets the requirements listed below. (Refer to **Voltage Conversion** instructions for details.)

Nominal Voltage 440V, 480V
Cycle .....60 Hz
Phase 3-Phase
Power Supply Circuit ..... 15 Amps

Connection Type

A permanently connected (hardwired) power supply is typically installed with wires running through mounted and secured conduit. A disconnecting means, such as a locking switch (see following figure), must be provided to allow the machine to be disconnected (isolated) from the power supply when required. This installation must be performed by an electrician in accordance with all applicable electrical codes and ordinances.

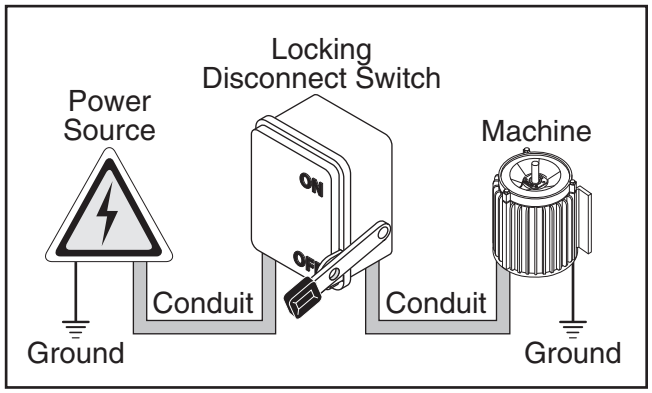

Figure 14. Typical setup of a permanently connected machine.

Grounding Instructions

In the event of a malfunction or breakdown, grounding provides a path of least resistance for electrical current to reduce the risk of electric shock. A permanently connected machine must be connected to a grounded metal permanent wiring system; or to a system having an equipment-grounding conductor. All grounds must be verified and rated for the electrical requirements of the machine. Improper grounding can increase the risk of electric shock!

Phase Converter Precaution

The power from the manufactured leg may damage electrical components if connected to the wrong incoming power terminal on your machine. Only connect the manufactured leg to the terminal indicated on the wiring diagram. **DO NOT use a static phase converter, as they are known to damage electrical components.**

440V Conversion

The Model G0569 is convertable to 440V operation. This conversion job consists of disconnecting the saw from the power source, changing the connections on the magnetic switch and rewiring the motor for 440V operation.

The Model G0569 440V Conversion Kit (Part P0569082A) for this procedure can be purchased by calling Grizzly Customer Service at (800) 523-4777.

All wiring changes must be inspected by a qualified electrician before the saw is connected to the power source. If, at any time during this procedure you need help, call Grizzly Tech Support at (570) 546-9663.

To rewire the Model G0569 for 440V operation:

1. DISCONNECT MACHINE FROM POWER!

2. Remove the magnetic switch cover, then disconnect the 220V magnetic switch (see **Figure 15**).

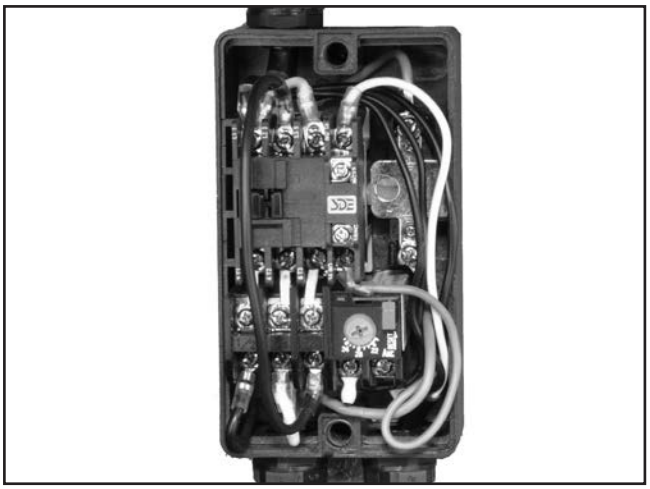

Figure 15. 220V magnetic switch

3. Install the 440V magnetic switch and wire it according to the **G0569 Wiring Diagram** on **Page 66.**

4. Remove the motor junction box cover, rewire the motor as shown on the diagram located inside the junction box, then reinstall the cover.

   Note: *The reference wiring diagram on **Page 66** was current at the time of printing, but always use the wiring diagram provided inside the motor junction box, as it will reflect any changes to the motor shipped with your machine.*

Extension Cords

Since this machine must be permanently connected to the power supply, an extension cord cannot be used.

SECTION 3: SETUP

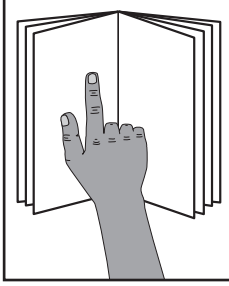

⚠WARNING

This machine presents serious injury hazards to untrained users. Read through this entire manual to become familiar with the controls and operations before starting the machine!

⚠WARNING

Wear safety glasses during the entire setup process!

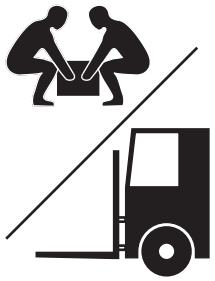

⚠WARNING

HEAVY LIFT!

Straining or crushing injury may occur from improperly lifting machine or some of its parts. To reduce this risk, get help from other people and use a forklift (or other lifting equipment) rated for weight of this machine.

⚠WARNING

No list of safety guidelines can be complete. Every shop environment is different. Always consider safety first, as it applies to your individual working conditions. Use this and other machinery with caution and respect. Failure to do so could result in serious personal injury, damage to equipment, or poor work results.

Needed for Setup

The following items are needed, but not included, for the setup/assembly of this machine.

Description	Qty
• Safety Glasses	1
• Cleaner/Degreaser (**Page 20**)	As Needed
• Disposable Shop Rags	As Needed
• Forklift	1
• Chains w/Safety Hooks 1000 lb Capacity	2
• Straightedge 2'	1
• Fine Ruler	1
• Machinist's Square	1
• Feeler Gauges 0.016", 0,004"	1 Ea
• Screwdriver Phillips #2	1
• Screwdriver Flat Head #2	1
• Dust Collection System	1
• Dust Hose 4"	1
• Hose Clamps 4"	2

Unpacking

This machine was carefully packaged for safe transport. When unpacking, separate all enclosed items from packaging materials and inspect them for shipping damage. ***If items are damaged, please call us immediately at (570) 546-9663.***

IMPORTANT: Save all packaging materials until you are completely satisfied with the machine and have resolved any issues between Grizzly or the shipping agent. *You MUST have the original packaging to file a freight claim. It is also extremely helpful if you need to return your machine later.*

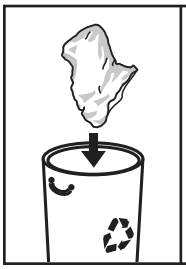

⚠WARNING

SUFFOCATION HAZARD!

Keep children and pets away from plastic bags or packing materials shipped with this machine.

Inventory

The following is a list of items shipped with your machine. Before beginning setup, lay these items out and inventory them.

If any non-proprietary parts are missing (e.g. a nut or a washer), we will gladly replace them; or for the sake of expediency, replacements can be obtained at your local hardware store.

NOTICE

If you cannot find an item on this list, carefully check around/inside the machine and packaging materials. Often, these items get lost in packaging materials while unpacking or they are pre-installed at the factory.

Box 1 (Figure 16-17):		**Qty**
A.	Bandsaw (not shown)	1
B.	Fence Handle	1
C.	Fence	1
D.	Handwheel	1
E.	Eye Bolts	2
F.	Hex Wrench 5mm	1
G.	Hex Wrench 6mm	1
H.	Open End Wrench 10 x 13	1
I.	Open End Wrench 17 x 19	1
J.	Miter Gauge	1
K.	Handwheel Handle	1

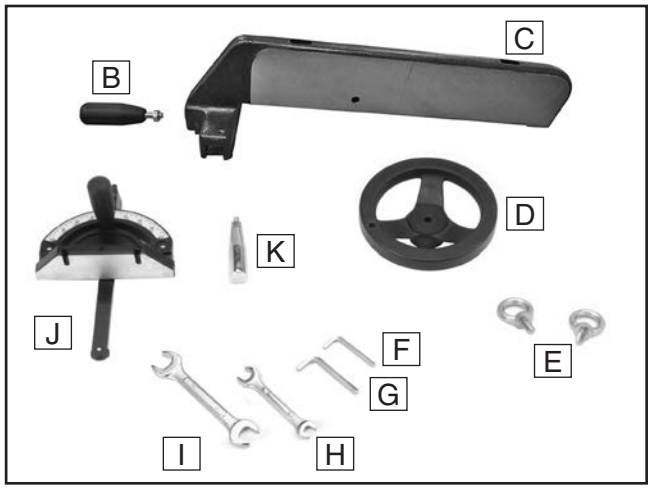

Figure 16. Main inventory.

L.	Riser Blocks	2
M.	Hardware	1
	—Hex Bolts M12-1.75 x 100	4
	—Flat Washers 12mm	4
	—Lock Washers 12mm	4

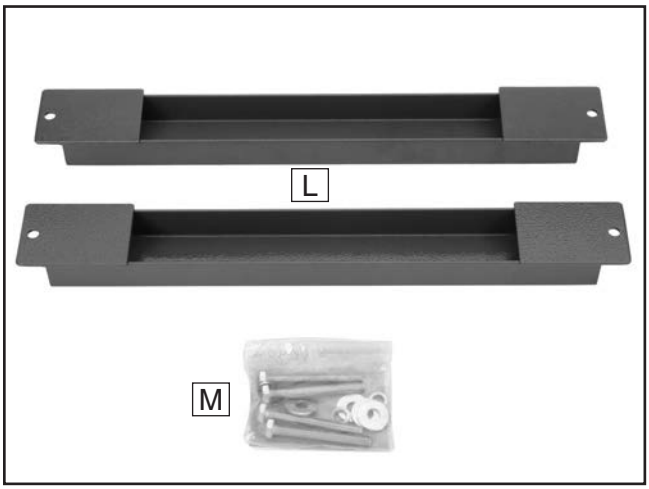

Figure 17. Riser blocks and hardware.

If any nonproprietary parts are missing (e.g. a nut or a washer), we will gladly replace them; or for the sake of expediency, replacements can be obtained at your local hardware store.

⚠WARNING

SUFFOCATION HAZARD!

Immediately discard all plastic bags and packing materials to eliminate choking/suffocation hazards for children and animals.

Hardware Recognition Chart

USE THIS CHART TO MATCH UP HARDWARE DURING THE INVENTORY AND ASSEMBLY PROCESS.

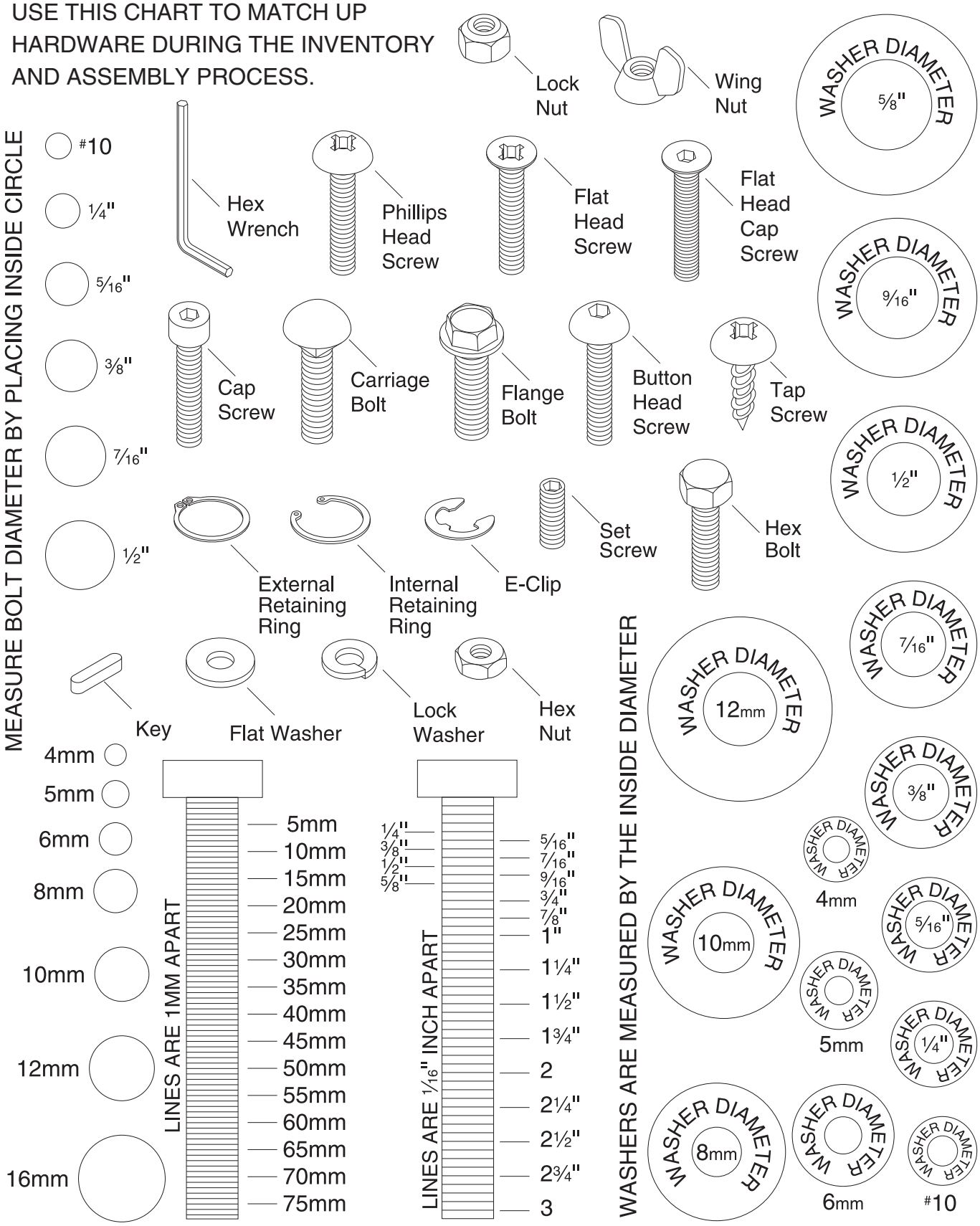

Cleanup

The unpainted surfaces of your machine are coated with a heavy-duty rust preventative that prevents corrosion during shipment and storage. This rust preventative works extremely well, but it will take a little time to clean.

Be patient and do a thorough job cleaning your machine. The time you spend doing this now will give you a better appreciation for the proper care of your machine's unpainted surfaces.

There are many ways to remove this rust preventative, but the following steps work well in a wide variety of situations. Always follow the manufacturer's instructions with any cleaning product you use and make sure you work in a well-ventilated area to minimize exposure to toxic fumes.

Before cleaning, gather the following:
- Disposable rags
- Cleaner/degreaser (WD•40 works well)
- Safety glasses & disposable gloves
- Plastic paint scraper (optional)

Basic steps for removing rust preventative:

1. Put on safety glasses.

2. Coat the rust preventative with a liberal amount of cleaner/degreaser, then let it soak for 5–10 minutes.

3. Wipe off the surfaces. If your cleaner/degreaser is effective, the rust preventative will wipe off easily. If you have a plastic paint scraper, scrape off as much as you can first, then wipe off the rest with the rag.

4. Repeat **Steps 2–3** as necessary until clean, then coat all unpainted surfaces with a quality metal protectant to prevent rust.

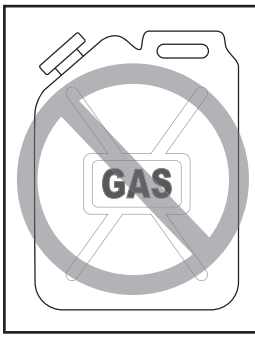

WARNING

Gasoline and petroleum products have low flash points and can explode or cause fire if used to clean machinery. Avoid using these products to clean machinery.

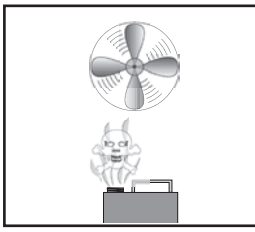

CAUTION

Many cleaning solvents are toxic if inhaled. Only work in a well-ventilated area.

NOTICE

Avoid harsh solvents like acetone or brake parts cleaner that may damage painted surfaces. Always test on a small, inconspicuous location first.

T23692—Orange Power Degreaser
A great product for removing the waxy shipping grease from the ***non-painted*** parts of the machine during clean up.

Figure 18. T23692 Orange Power Degreaser.

Site Considerations

Weight Load

Refer to the **Machine Data Sheet** for the weight of your machine. Make sure that the surface upon which the machine is placed will bear the weight of the machine, additional equipment that may be installed on the machine, and the heaviest workpiece that will be used. Additionally, consider the weight of the operator and any dynamic loading that may occur when operating the machine.

Space Allocation

Consider the largest size of workpiece that will be processed through this machine and provide enough space around the machine for adequate operator material handling or the installation of auxiliary equipment. With permanent installations, leave enough space around the machine to open or remove doors/covers as required by the maintenance and service described in this manual. **See below for required space allocation.**

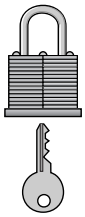

⚠CAUTION

Children or untrained people may be seriously injured by this machine. Only install in an access restricted location.

Physical Environment

The physical environment where the machine is operated is important for safe operation and longevity of machine components. For best results, operate this machine in a dry environment that is free from excessive moisture, hazardous chemicals, airborne abrasives, or extreme conditions. Extreme conditions for this type of machinery are generally those where the ambient temperature range exceeds 41°–104°F; the relative humidity range exceeds 20%–95% (non-condensing); or the environment is subject to vibration, shocks, or bumps.

Electrical Installation

Place this machine near an existing power source. Make sure all power cords are protected from traffic, material handling, moisture, chemicals, or other hazards. Make sure to leave enough space around machine to disconnect power supply or apply a lockout/tagout device, if required.

Lighting

Lighting around the machine must be adequate enough that operations can be performed safely. Shadows, glare, or strobe effects that may distract or impede the operator must be eliminated.

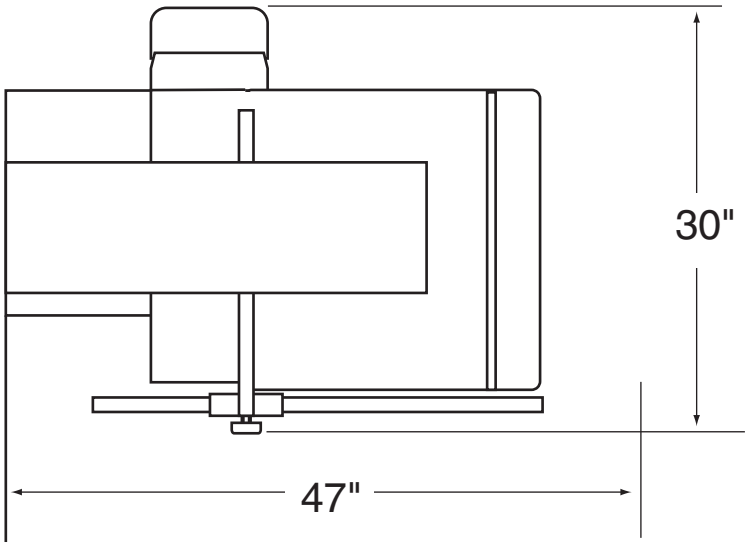

Figure 19. Minimum working clearances.

Lifting & Placing

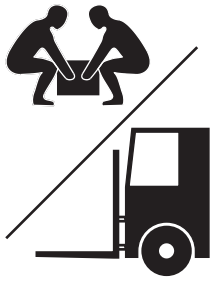

⚠WARNING

HEAVY LIFT!

Straining or crushing injury may occur from improperly lifting machine or some of its parts. To reduce this risk, get help from other people and use a forklift (or other lifting equipment) rated for weight of this machine.

Take special care when moving this bandsaw. Only use the following methods to lift or move this bandsaw.

Using Forklift & Eye Bolt

1. Use forklift to move crate to prepared location, then remove crate from shipping pallet.

2. Unbolt bandsaw from pallet.

3. Install eye bolt shown in **Figure 20**. Make sure it is threaded all the way in, then place lifting hook through eye bolt and lift slowly with a forklift.

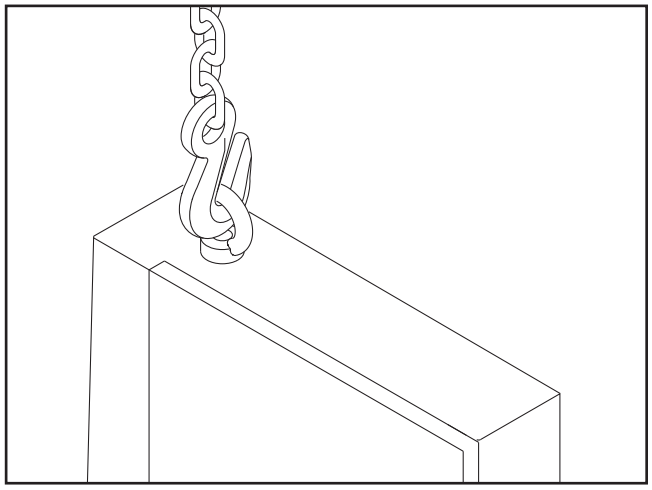

Figure 20. Lifting the bandsaw.

4. Remove pallet and slowly set bandsaw into position.

Using Forklift & Wood Blocks

1. Use forklift to move crate to prepared location, then remove crate from shipping pallet.

2. Unbolt bandsaw from pallet.

3. Carefully place the forklift forks under bandsaw head and install a 1x4 wood shim between the head and the left fork and a 2x4 wood shim between the head and right fork so the bandsaw is level, as shown in **Figure 21**.

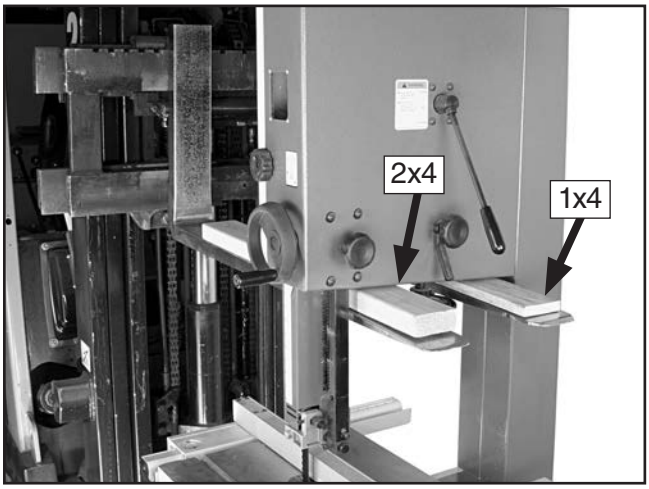

Figure 21. Example of lifting bandsaw with forklift using wood shims.

4. Lift the bandsaw off of the pallet, remove the pallet, and slowly set the bandsaw into position.

Note: *If you are concerned about your forklift forks hitting the tension handwheel, remove the handwheel before positioning the forks, then reinstall it after lifting.*

Anchoring to Floor

Number of Mounting Holes 4
Diameter of Mounting Hardware..... ½"

Anchoring machinery to the floor prevents tipping or shifting and reduces vibration that may occur during operation, resulting in a machine that runs slightly quieter and feels more solid.

If the machine will be installed in a commercial or workplace setting, or if it is permanently connected (hardwired) to the power supply, local codes may require that it be anchored to the floor.

If not required by any local codes, fastening the machine to the floor is an optional step. If you choose not to do this with your machine, we recommend placing it on machine mounts, as these provide an easy method for leveling and they have vibration-absorbing pads.

Anchoring to Concrete Floors

Lag shield anchors with lag screws (see below) are a popular way to anchor machinery to a concrete floor, because the anchors sit flush with the floor surface, making it easy to unbolt and move the machine later, if needed. However, anytime local codes apply, you MUST follow the anchoring methodology specified by the code.

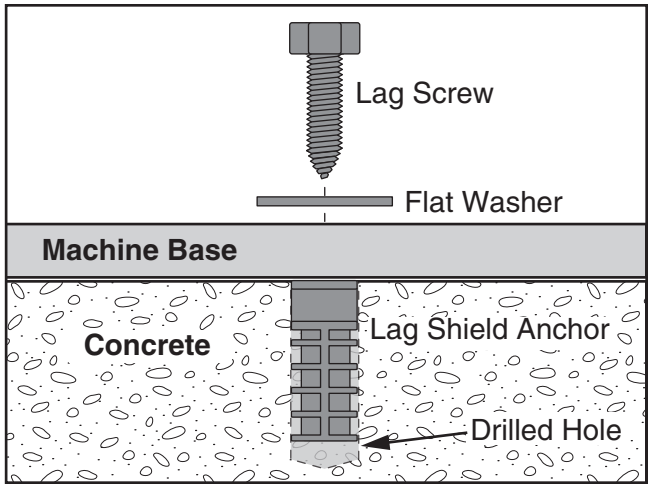

Figure 22. Popular method for anchoring machinery to a concrete floor.

Riser Blocks

Riser blocks, shown in **Figure 23**, are included with the Model G0568/G0569 to match the height of the table to your personal preference or needs. This added feature, when installed, lifts the working table height from 32½" to 34½".

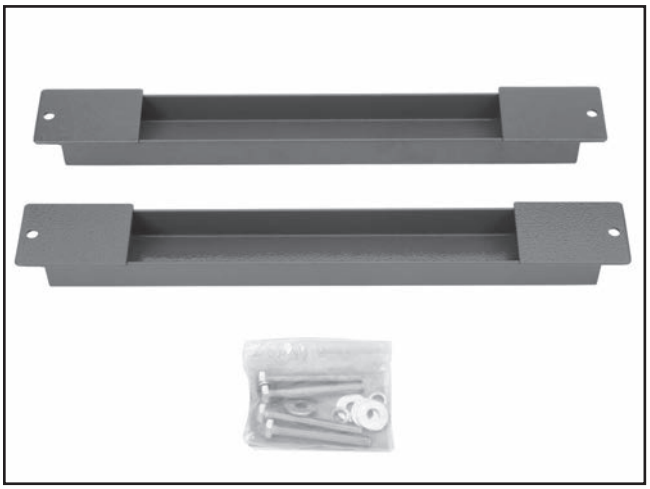

Figure 23. Optional riser blocks and hardware.

To install the riser blocks:

1. Lift the Model G0568/G0569 with a forklift or other power equipment.

2. Place the four hex bolts, lock washers, and flat washers, down through the holes in the base.

3. Locate and align the threaded holes in the riser bars, then securely tighten the bolts.

Note: *The riser bars have tabs with holes for mounting the bandsaw unit to the floor to maximize stability. We highly recommend utilizing them and securing the bandsaw to the floor.*

Assembly

The machine must be fully assembled before it can be operated. Before beginning the assembly process, refer to **Needed for Setup** and gather all listed items. To ensure the assembly process goes smoothly, first clean any parts that are covered or coated in heavy-duty rust preventative (if applicable).

To assemble bandsaw:

1. Remove the hex bolts, lock washers, and flat washers that hold the rail onto the table, then remove the rail.

2. Flip the rail over and re-install with the fasteners removed in **Step 1**.

3. Install the fence handle on the fence, if it is not already installed.

4. Tighten the hex nut on the fence handle against the fence pivot block (see **Figure 24**).

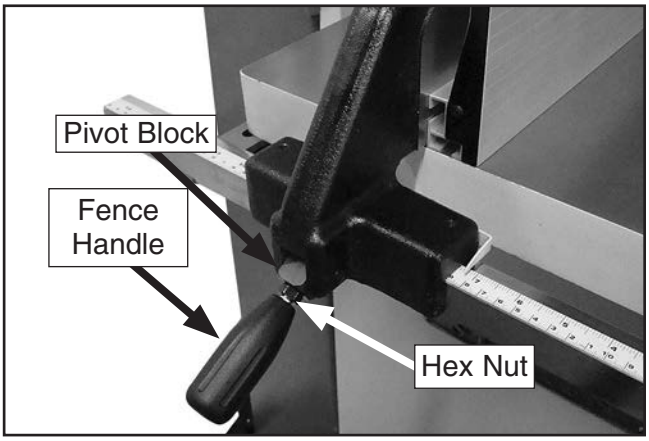

Figure 24. Fence handle components.

5. Pull the fence handle up and place the fence assembly on the rail (see **Figure 25**).

Figure 25. Example of installing fence onto rail.

6. Push the fence handle down to lock the fence assembly in place.

7. Slide the handwheel (see **Figure 26**) on to the shaft.

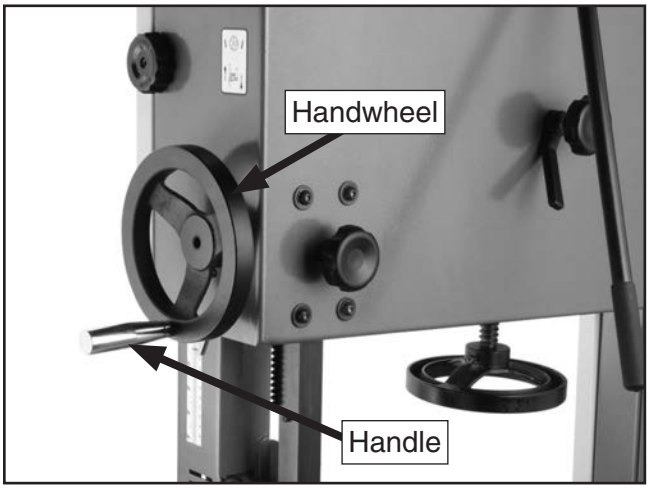

Figure 26. Handwheel correctly installed.

8. Tighten the cap screw in the handwheel securely.

9. Thread the handle in to the handwheel and tighten with the 14mm wrench.

Dust Collection

⚠CAUTION

This machine creates a lot of wood chips/dust during operation. Breathing airborne dust on a regular basis can result in permanent respiratory illness. Reduce your risk by wearing a respirator and capturing the dust with a dust-collection system.

Recommended CFM at each Dust Port: 400
Do not confuse this CFM recommendation with the rating of the dust collector. To determine the CFM at the dust port, you must consider these variables: (1) CFM rating of the dust collector, (2) hose type and length between the dust collector and the machine, (3) number of branches or wyes, and (4) amount of other open lines throughout the system. Explaining how to calculate these variables is beyond the scope of this manual. Consult an expert or purchase a good dust collection "how-to" book.

To connect a dust collection hose:

1. Fit a 4" dust hose over each dust port, as shown in **Figure 27**, and secure in place with a hose clamp.

2. Tug each hose to make sure it does not come off. **Note:** *A tight fit is necessary for proper performance.*

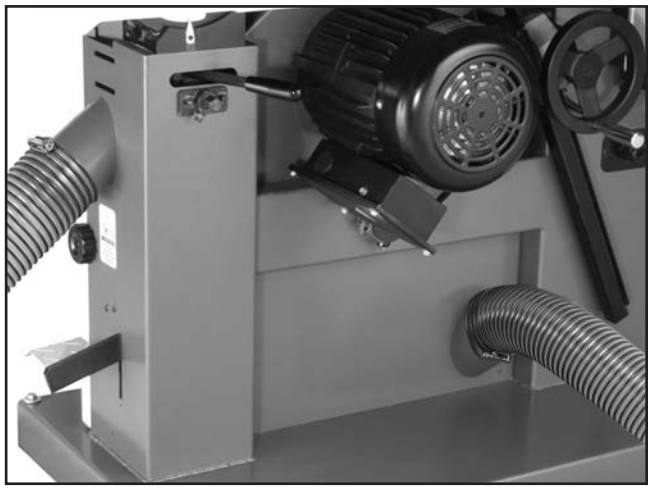

Figure 27. Dust hoses attached to dust port.

Blade Tracking

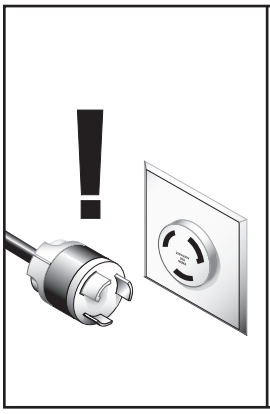

⚠WARNING

Personal injury or death can occur if the machine starts while your hand is touching the bandsaw wheel during tracking adjustments. Disconnect power from the bandsaw before performing blade tracking adjustments.

The blade tracking is primarily affected by the tilt of the upper wheel, also known as "Center Tracking"; and the alignment of both wheels, also known as "Coplanar Tracking." (For Coplanar Tracking, see the **Wheel Alignment** instructions on **Page 62**.)

The wheels on this bandsaw were aligned at the factory, so Center Tracking is the only adjustment that needs to be performed when the saw is new.

To center track the blade:

1. DISCONNECT MACHINE FROM POWER!

2. Make sure the upper and lower blade guides are adjusted away from the blade (see **Page 34**).

3. Move the quick tension lever to the tightened position and turn the blade tension handwheel until the blade tension matches the mark on the blade tension scale for the appropriate blade thickness (see **Figure 28**).

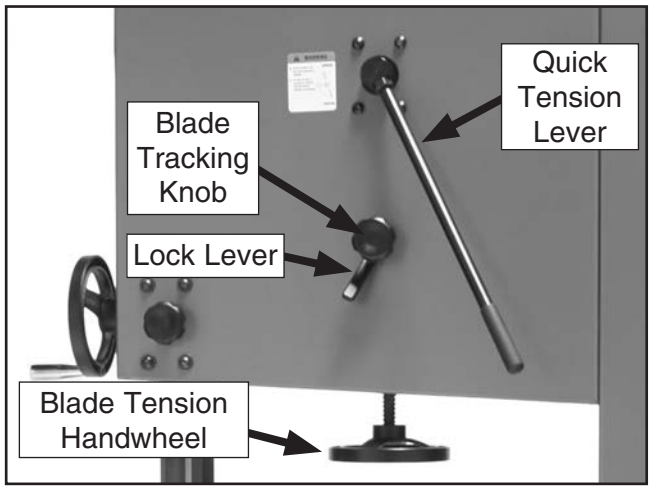

Figure 28. Blade tensioning controls.

4. Open the upper wheel cover.

5. Spin the upper wheel by hand at least three times and watch how the blade rides on the crown of the wheel. Refer to **Figure 29** for an illustration of this concept.

   —**If the blade rides in the center of the upper wheel and is centered on the peak of the wheel crown**, then the bandsaw is already center tracked properly and no further adjustments are needed at this time.

   —**If the blade does not ride in the center of the upper wheel and is not centered on the peak of the wheel crown,** then continue with the following steps.

⚠CAUTION

The cast iron spokes may have sharp edges and the blade teeth may extend beyond the edge of the wheel, creating a laceration hazard. Be careful when turning the wheels by hand.

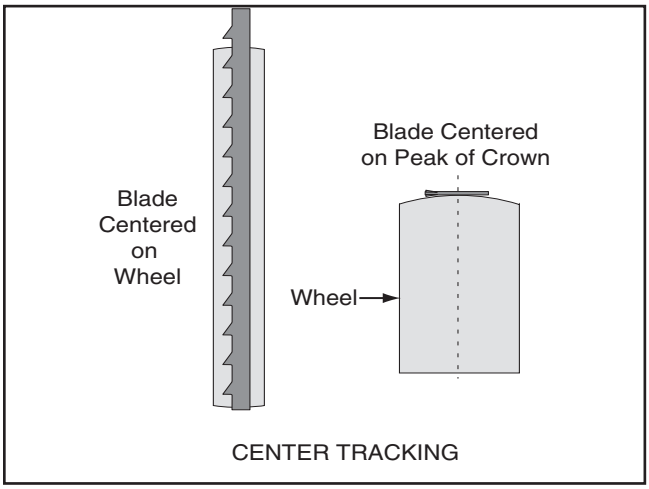

Figure 29. Center tracking profiles.

6. Loosen the lock lever (see **Figure 30**) so that the blade tracking knob can rotate.

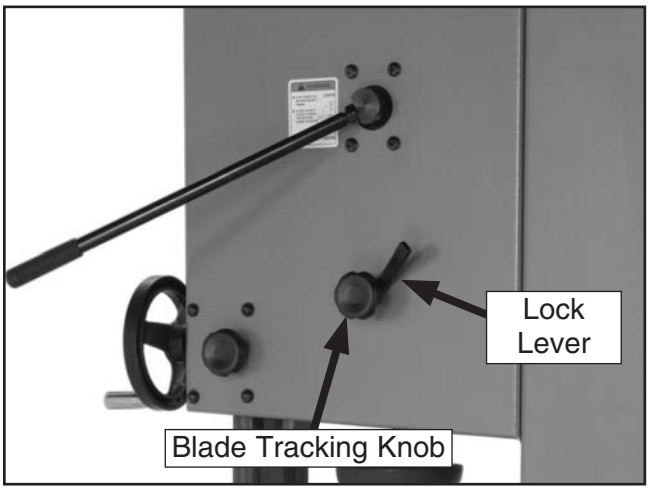

Figure 30. Blade tracking controls.

7. Spin the upper wheel with one hand and rotate the blade tracking knob with the other hand to make the blade ride in the center of the bandsaw wheel tire.

8. Tighten the lock lever and close the upper wheel cover.

Tip: *For the best performance from your saw, regularly maintain proper tracking of the blade.*

NOTICE

Changes in the blade tension may change the blade tracking.

Power Connection

Before connecting to power, read through the **SECTION 2: POWER SUPPLY** section on **Page 14** to check that your setup follows the safety and circuit requirements for this machine. Be sure to also have your electrician on hand for the "Test Run" in case the power is connected out of phase (Model G0569 only).

⚠WARNING

Attempting to connect this machine to the power source without a qualified electrician greatly increases the risk of electrocution, fire, or machine damage.

To connect the bandsaw to the power source:

1. Remove the screws securing the power supply terminal box.

2. Feed the power wires through the strain relief on the bottom of the terminal box, tighten the strain relief, connect the cord to the terminals shown in **Figure 31** then re-install the terminal box cover.

   Note: *When using a phase converter, connect the manufactured power leg or "wild wire" to the terminal indicated in **Figure 31**. This terminal can handle power fluctuation because it is wired directly to the motor. The other wires connect to the controls and must be consistent to prevent damage.*

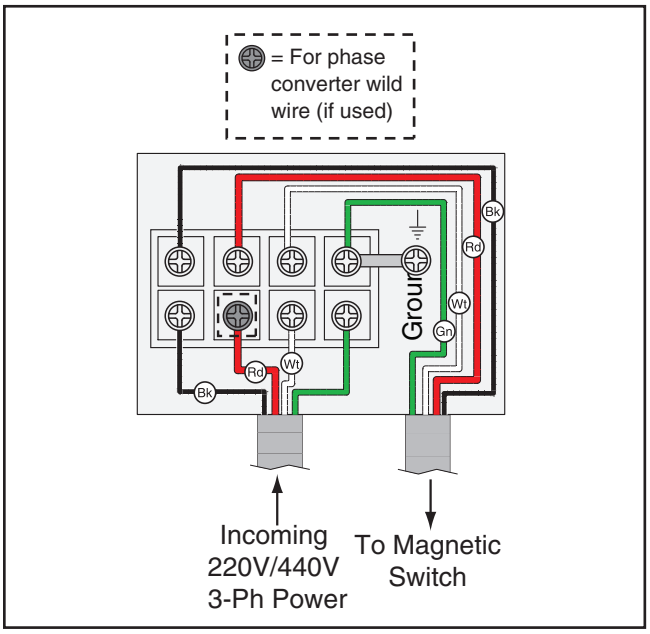

Figure 31. G0569 terminal box connection.

3. **Model G0569 3-Phase, 440V Operation Only:** Shut off the main power at the power source circuit breaker and attach the wires to the locking shut-off switch.

   Model G0569 3-Phase, 220V Operation: Connect the power cord with an L15-30 plug to an L15-30 receptacle.

Test Run

Once the assembly is complete, test run your machine to make sure it runs properly and is ready for regular operation.

The test run consists of verifying the following: 1) The motor powers up and runs correctly, 2) the safety disabling mechanism on the switch works correctly, and 3) the stop button safety feature works correctly.

If, during the test run, you cannot easily locate the source of an unusual noise or vibration, stop using the machine immediately, then review **Troubleshooting** on **Page 53**.

If you still cannot remedy a problem, contact our Tech Support at (570) 546-9663 for assistance.

To test run the machine:

1. Make sure you have read the safety instructions at the beginning of the manual and that the machine is set up properly.

2. Make sure all tools and objects used during setup are cleared away from the machine.

3. Connect the machine to the power source.

4. Verify that the machine is operating correctly by turning the switch disabling key (see **Figure 32**) to "1" and turning the machine ***ON***.

   —When operating correctly, the machine runs smoothly with little or no vibration or rubbing noises.

   —Investigate and correct strange or unusual noises or vibrations before operating the machine further. Always disconnect the machine from power when investigating or correcting potential problems.

Figure 32. G0568 switch disabling key and ON/OFF switch.

5. Press the OFF button to stop the machine.

6. WITHOUT resetting the OFF button, press the ON button. The machine should not start.

   —If the machine does not start, the OFF button safety feature is working correctly.

   —If the machine does start (with the stop button pushed in), immediately disconnect power to the machine. The OFF button safety feature is not working correctly. This safety feature must work properly before proceeding with regular operations. Call Tech Support for help.

7. Push the OFF button in, then twist it clockwise so it pops out. When the OFF button pops out, the switch is reset and ready for operation (see **Figure 33**).

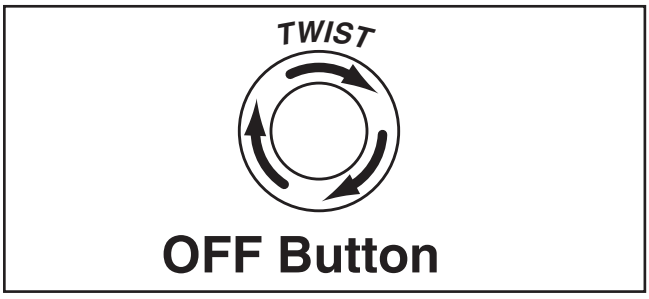

Figure 33. Resetting the switch.

8. Turn the bandsaw ***ON*** and allow it to reach full speed, then press the foot brake (see **Figure 53**, **Page 40**) completely.

—If the bandsaw blade stops the foot brake is working correctly; continue to the next step.

—If the bandsaw blade does not stop moving, the foot brake feature is not working correctly. This safety feature must work properly before proceeding with regular operations. Call Tech Support for help.

9. Make sure the blade has fully stopped, open the top and bottom wheel covers a few inches, then turn the bandsaw ***ON***.

—If the bandsaw does not start the upper wheel cover limit switch (see **Figure 34**) is working correctly; continue to the next step.

—If the bandsaw starts, immediately turn the machine ***OFF*** and disconnect power. The upper wheel cover limit switch is not working correctly. This safety feature must work properly before proceeding with regular operations. Call Tech Support for help.

Figure 34. Upper door limit switch.

10. Close the upper and lower wheel covers.

11. Turn the switch disabling key to "0", as shown in **Figure 32** on **Page 28**.

12. Try to turn the machine ***ON***.

—If the bandsaw does not start, the switch disabling feature is working as designed. The Test Run is complete.

—If the bandsaw starts, immediately disconnect power. The switch disabling feature is not working correctly. This safety feature must work properly before proceeding with regular operations. Call Tech Support for help.

13. **Model G0569 Only:** Verify that the power is not connected out of phase by starting/stopping the machine and determining if the motor turns in the correct direction, using the criteria below:

—If the blade moves down and toward the table (as standing in front of the machine), it is turning in the correct direction.

—If the blade turns up and away from the table, it is turning in the wrong direction. Stop the machine, disconnect the power source, then swap any two of the three power wires that connect to the machine.

Adjusting Table Stop

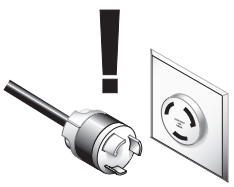

⚠WARNING

Personal injury or death can occur if the bandsaw starts during table adjustments. Disconnect power from the bandsaw before performing table adjustments.

The positive stop allows the table to be quickly and accurately returned to the horizontal (0˚) position after being adjusted to a different angle.

To set the positive stop:

1. DISCONNECT MACHINE FROM POWER!

2. Adjust the blade tension to the appropriate level for the blade size on the blade tension scale (see **Page 34**).

3. Loosen the jam nut that locks the positive stop bolt in place.

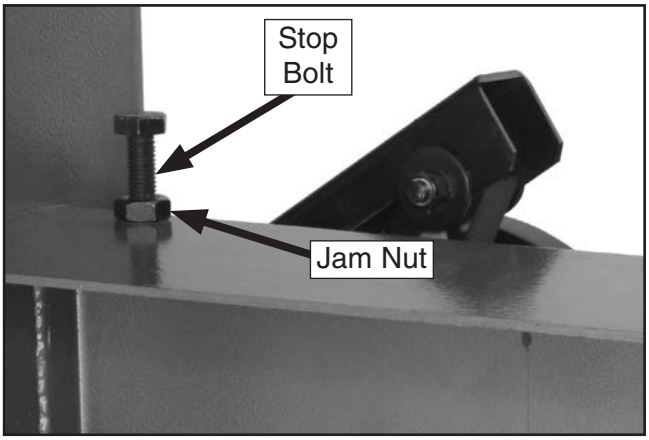

Figure 35. Positive stop bolt and jam nut (as viewed from front).

4. Raise the guide post and place a machinist's square on the table next to the side of the blade as illustrated in **Figure 36**. Adjust the table square with the blade using the table tilt handwheel, then secure with the table tilt lock lever.

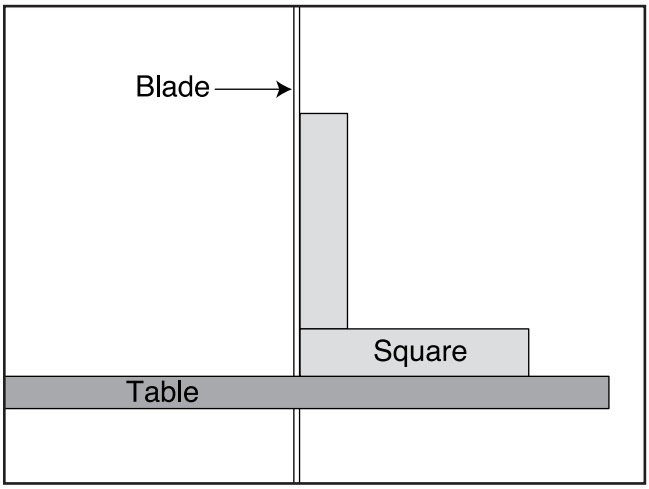

Figure 36. Squaring table to blade.

5. Adjust the positive stop bolt so it just touches the table and secure it by tightening the jam nut against the bandsaw.

6. Check the adjustment for accuracy once you have tightened the jam nut.

Table Tilt Calibration

To calibate the table tilt pointer:

1. DISCONNECT MACHINE FROM POWER!

2. Follow **Steps 2-6** in **Table Stop Calibration.**

3. Loosen the screw on the table tilt scale pointer (see **Figure 37**), but do not remove it.

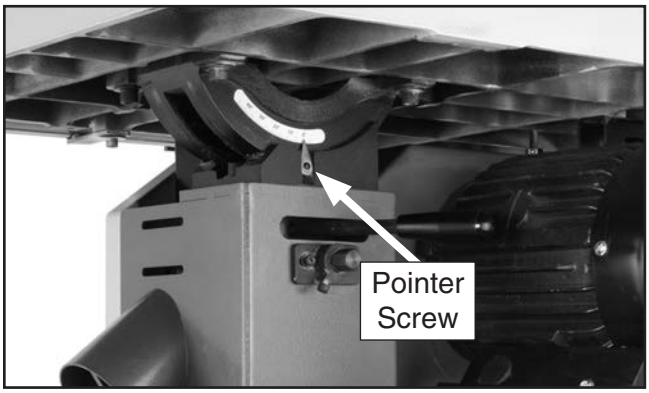

Figure 37. Table tilt pointer.

4. Align the tip of the pointer with the 0˚ mark on the table tilt scale, then tighten the screw to secure the setting.

Aligning Table

To ensure cutting accuracy, the table should be aligned so that the miter slot is parallel to the bandsaw blade. This procedure works best with a 1½" blade installed.

To align the table so the miter slot is parallel to the bandsaw blade:

1. Make sure that the blade is tracking properly and that it is correctly tensioned.

2. DISCONNECT BANDSAW FROM POWER!

3. Loosen the four trunnion cap screws that secure the table to the trunnions (see **Figure 38**).

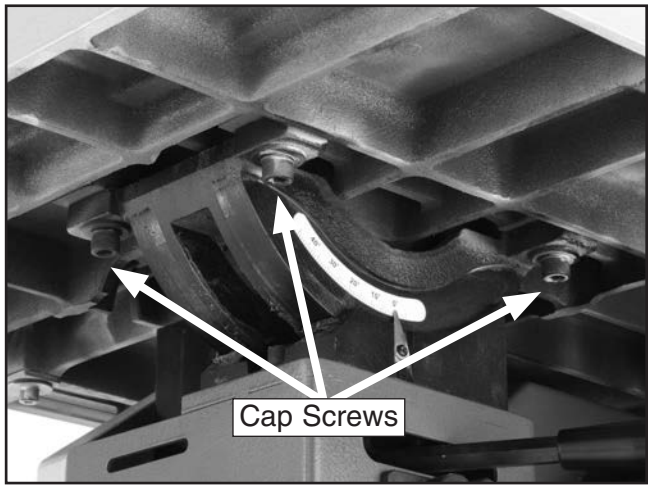

Figure 38. Cap screws securing table to trunnion.

4. Place an accurate straightedge along the blade. The straightedge should lightly touch both the front and back of the blade. **Note:** *Make sure the straightedge does not go across a tooth.*

5. Use a fine ruler to accurately gauge the distance between the straightedge and the miter slot. The distance you measure should be the same at both the front and the back of the table (see **Figure 39**).

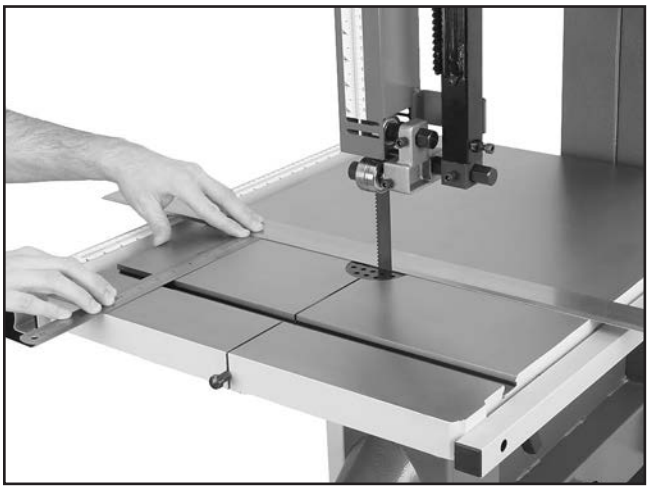

Figure 39. Example of measuring for miter slot to be parallel with blade.

6. Adjust the table as needed for proper alignment.

7. Tighten the trunnion cap screws when the alignment is correct.

Aligning Fence

To ensure cutting accuracy when the fence is first installed, the fence should be aligned with the miter slot.

NOTICE

Adjusting the fence parallel to the miter slot does not guarantee straight cuts. The miter slot may need to be adjusted parallel to the side of the blade. Refer to Aligning Table instructions on Page 31.

To align the fence parallel with the miter slot:

1. DISCONNECT MACHINE FROM POWER!

2. Make sure the miter slot is aligned with the bandsaw blade (see **Aligning Table** on **Page 31**).

3. Mount the fence next to the miter slot, then loosen the hex bolts, lock washers, and flat washers that secure the fence rail to the table.

4. Adjust the fence face parallel with the edge of the miter slot, as shown in **Figure 40**.

Figure 40. Example of fence square with miter slot.

5. Tighten the hex bolts, lock washers, and flat washers that secure the rail to the table, being careful not to move the fence.

Pointer Calibration

Your new bandsaw is equipped with a fence measurement system that includes a fence pointer, which must be calibrated when the bandsaw is first set up.

To calibrate the pointer:

1. If the fence is mounted on the right-hand side of the blade, remove it and re-install it on the left-hand side of the blade.

2. Place the fence flush against the bandsaw blade (see **Figure 41**).

Figure 41. Example of fence flush with blade.

3. Loosen the pointer adjustment screw (see **Figure 42**) and set the pointer in line with "0" and the measurement scale on the table.

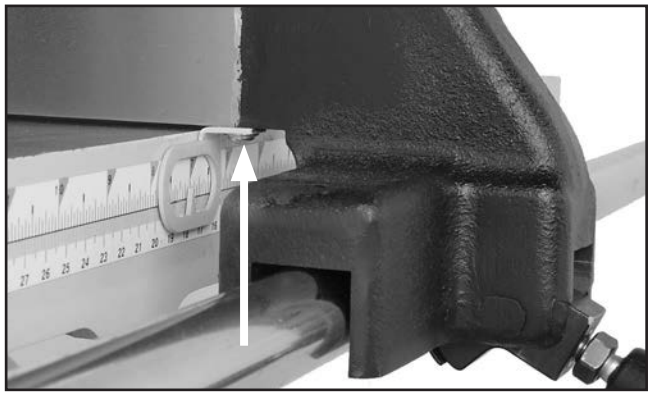

Figure 42. Fence pointer adjustment screw.

4. Tighten the pointer adjustment screw.

Miter Gauge

The miter gauge needs to be calibrated to the blade when it is first mounted in the miter slot.

To calibrate the miter gauge:

1. Place one edge of a machinist's square against the face of the miter gauge and the other against the blade face, as shown in **Figure 43**.

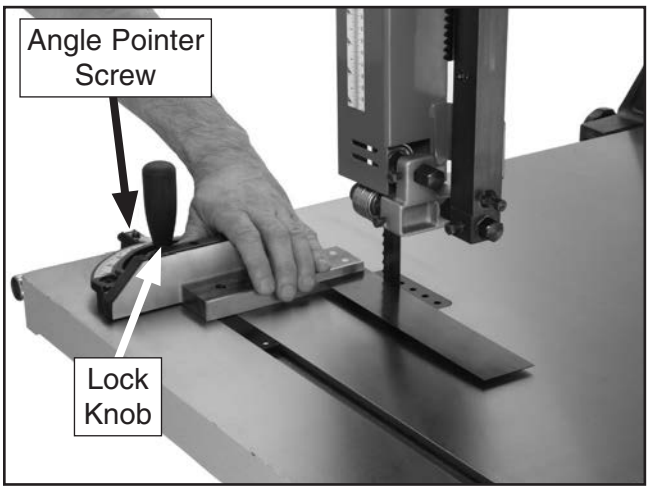

Figure 43. Example of squaring miter gauge to blade.

2. Loosen the lock knob on the miter gauge and adjust the gauge flush with the edge of the square.

3. Tighten the lock knob, and verify the setting.

   Note: *Sometimes the tightening procedure can affect the adjustment.*

4. Loosen the screw that secures the angle pointer and adjust the pointer to the 0˚ mark on the scale.

5. Retighten the screw that secures the angle pointer.

Tensioning Blade

A properly tensioned blade is essential for making accurate cuts and is required before making many bandsaw adjustments. (Everytime you replace the blade, perform this procedure because all blades tension differently.)

To tension the bandsaw blade:

1. Complete the **Test Run** procedure and make sure the blade is tracking properly (see **Page 25**).

2. Raise the upper blade guide assembly as high as it will go, and adjust the upper and lower guide blocks as far away from the blade as possible (see **Adjusting Blade Guide Bearings**).

   Note: *This procedure will NOT work if the guide blocks have any contact with the blade.*

3. Move the quick tension lever to the tightened position and turn the blade tension handwheel until the blade tension matches the mark on the blade tension scale for the appropriate blade thickness (See **Figure 28**, **Page 25**).

4. Turn the bandsaw ***ON***.

5. Slowly release the tension one quarter of a turn at a time. When you see the bandsaw blade start to flutter, stop decreasing the tension.

6. Now, slowly increase the tension until the blade stops fluttering, then tighten the tension another quarter turn.

7. Look at what the blade tension scale reads and use that as a guide for tensioning that blade in the future.

   Note: *Always release blade tension after use to increase blade life and reduce strain on the bandsaw components.*

8. Re-adjust the blade tracking as instructed on **Page 25**.

Adjusting Blade Guide Bearings

The blade guides provide side-to-side support to keep the blade straight while cutting. The blade guides are designed to be adjusted in two ways—forward/backward and side-to-side.

To adjust the upper blade guides:

1. Make sure the blade is tracking properly and that it is correctly tensioned.

2. DISCONNECT BANDSAW FROM POWER!

3. Familiarize yourself with the blade guide controls shown in **Figurea 44–45**.

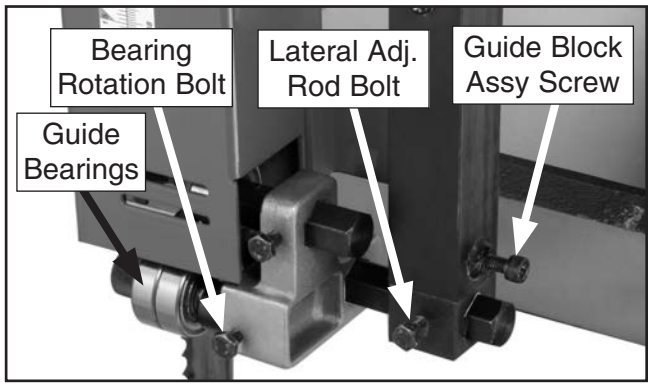

Figure 44. Upper blade guide controls (rear view).

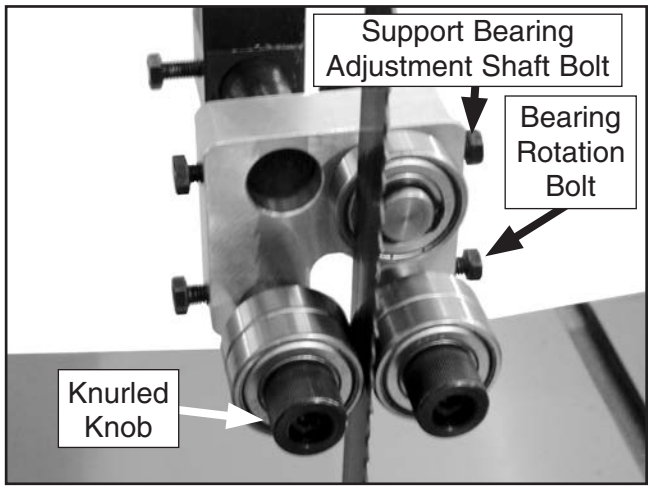

Figure 45. Upper blade guide controls (front view).

4. Loosen the lateral adjustment rod bolt, loosen the support bearing adjustment shaft bolt, and adjust the blade guides until the edges of the bearings are 1/16" behind the blade gullets, as illustrated in **Figure 46**.

   Note: *The 1/16" spacing is ideal, although with larger blades it may not be possible. In such cases, adjust the guide bearings as far forward to the blade gullets as possible, and still maintain the proper support bearing spacing adjustment.*

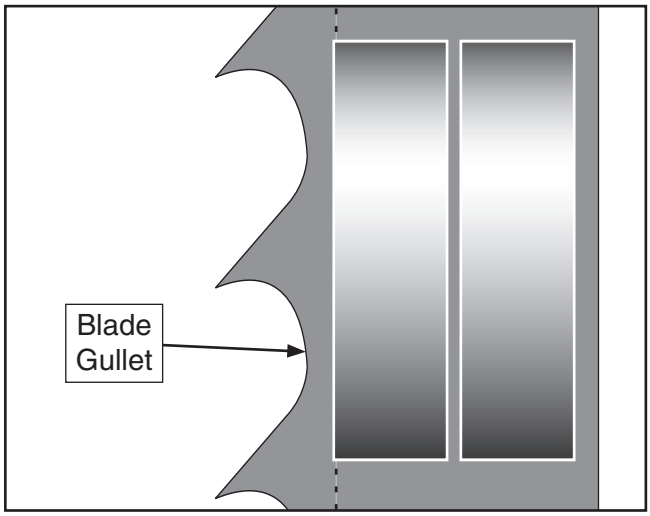

Figure 46. Lateral adjustment of blade guides.

NOTICE

Make sure that the blade teeth will not contact the guide bearings when the blade is against the rear support bearing during the cut or the blade teeth will be ruined.

5. Tighten the lateral adjustment rod bolt.

6. Loosen the bearing rotation bolts on both sides of the blade.

7. Rotate the knurled knobs to position the bearings 0.004" away from the blade.

   Note: *0.004" is approximately the thickness of a dollar bill.*

8. Tighten both of the the bearing rotation adjustment bolts to lock the blade guide bearings in position.

NOTICE

Whenever changing a blade or adjusting tension and tracking, the upper and lower blade support bearings and guide bearings must be properly adjusted and locked before cutting operations.

To adjust the lower blade guides:

1. Make sure the blade is tracking properly and that it is correctly tensioned.

2. DISCONNECT BANDSAW FROM POWER!

3. Familiarize yourself with the blade guide controls shown in **Figure 47**.

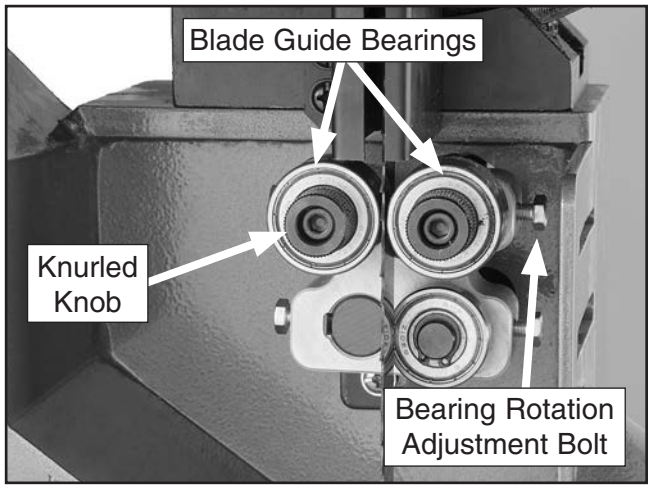

Figure 47. Lower blade guide controls (front view).

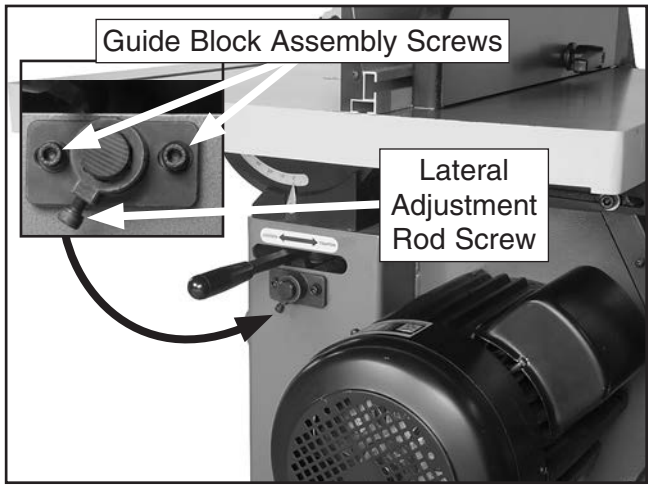

Figure 48. Lower blade guide controls (rear view).

4. Follow the procedure for adjusting the upper blade guides on **Page 34**.

   Note: *The lateral adjustment rod screw and guide block assembly screws are located below the table tilt lock lever (see **Figure 48**).*

Adjusting Support Bearings

NOTICE

Whenever changing a blade or adjusting tension and tracking, the upper and lower blade support bearings and blade guide bearings must be properly adjusted before cutting operations.

The support bearings are positioned behind the blade for support during cutting operations. Proper adjustment of the support bearings is an important part of making accurate cuts and also keeps the blade teeth from coming in contact with the guide bearings while cutting.

To adjust the upper support bearing:

1. Make sure the blade is tracking properly and that it is correctly tensioned.

2. DISCONNECT BANDSAW FROM POWER!

3. Familiarize yourself with the upper support bearing controls shown in **Figures 44–45**.

4. Loosen the guide block assembly screw and rotate the blade guide assembly side-to-side, until the blade is perpendicular with the face of the support bearing, as illustrated in **Figure 49**.

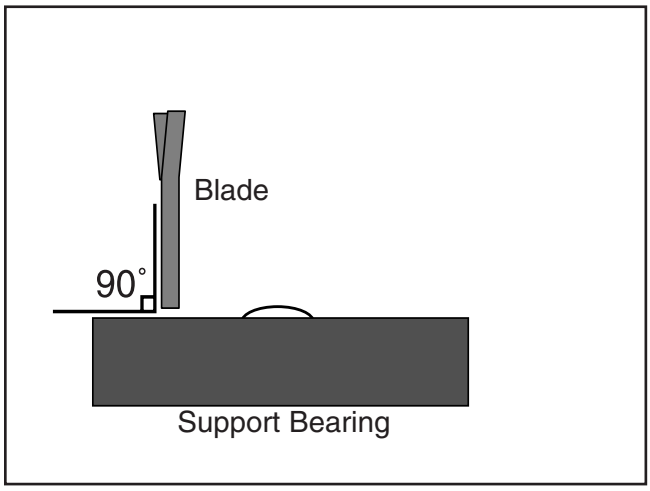

Figure 49. Illustration of blade set perpendicular (90˚) to the support bearing face.

5. Tighten the guide block assembly screw.

6. Loosen the bolt on the support bearing adjustment shaft—if it is not already loose.

7. Using a feeler gauge between the support bearing and the blade, position the bearing 0.016" away from the back of the blade, as illustrated in **Figure 50**.

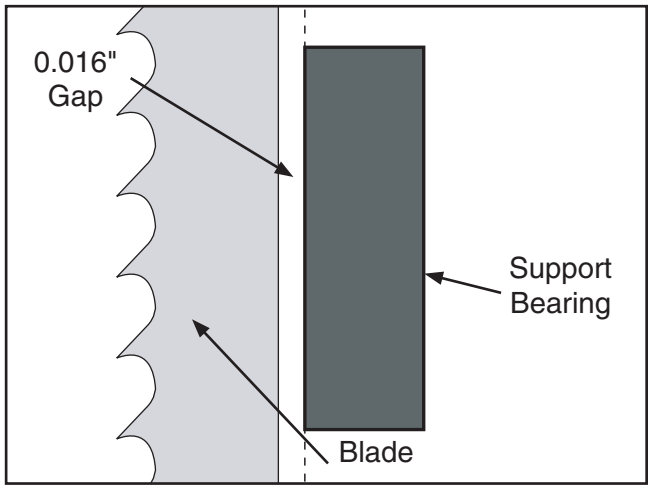

Figure 50. Blade aligned 0.016" away from the bearing edge.

Note: *For a quick gauge, fold a crisp dollar bill in half twice (four thicknesses of a dollar bill is approximately 0.016") and place it between the support bearing and the blade as shown in* ***Figure 51****.*

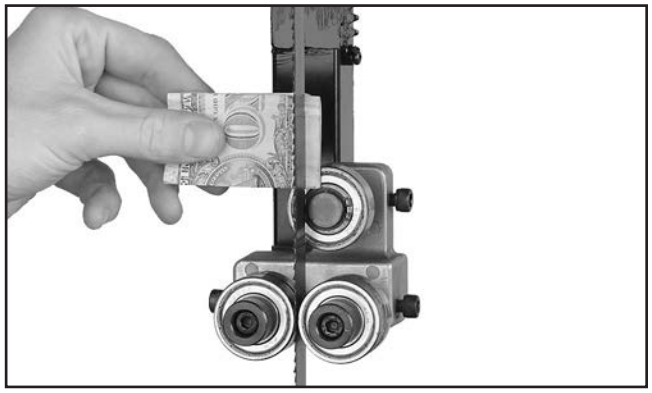

Figure 51. Example of dollar bill folded twice to make an approximate 0.016" gauge.

8. Tighten the bolt to keep the support bearing locked in place.

To adjust the lower support bearing:

1. Make sure the blade is tracking properly and is correctly tensioned.

2. DISCONNECT BANDSAW FROM POWER!

3. Familiarize yourself with the lower support bearing controls shown in **Figure 52**.

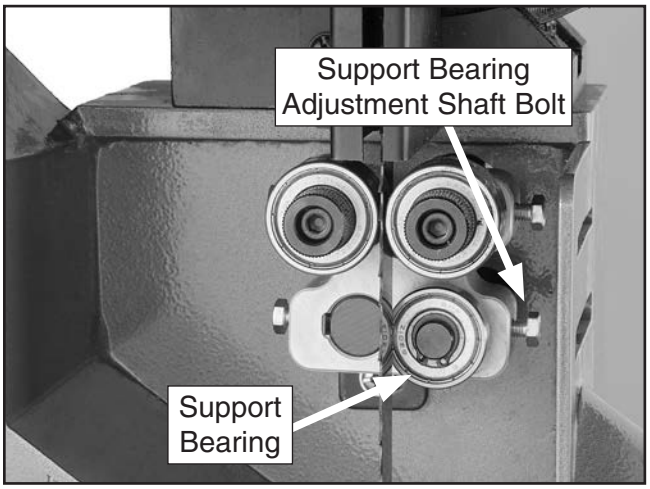

Figure 52. Lower support bearing controls.

4. Open the upper and lower wheel covers.

5. Make sure that the blade is perpendicular to the face of the support bearing, as illustrated in **Figure 49**.

   —If the blade is perpendicular to the face of the support bearing, continue on to the next step.

   —If the blade is not perpendicular to the support bearing, loosen the lateral adjustment rod screw and guide block assembly screws (**Figure 48**) and rotate the assembly side-to-side until it is perpendicular to the face of the support bearing, then re-tighten the screws.

6. Loosen the bolt on the support bearing adjustment shaft.

7. Using a feeler gauge, position the bearing 0.016" away from the back of the blade, as illustrated in **Figure 50**, or use a dollar bill, as shown in **Figure 51**.

8. Tighten the bolt to keep the support bearing locked in place.

SECTION 4: OPERATIONS

Operation Overview

The purpose of this overview is to provide the novice machine operator with a basic understanding of how the machine is used during operation, so the machine controls/components discussed later in this manual are easier to understand.

Due to the generic nature of this overview, it is **not** intended to be an instructional guide. To learn more about specific operations, read this entire manual, seek additional training from experienced machine operators, and do additional research outside of this manual by reading "how-to" books, trade magazines, or websites.

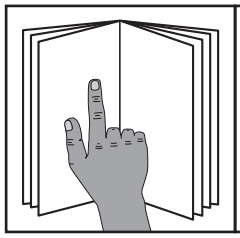

WARNING

To reduce your risk of serious injury, read this entire manual BEFORE using machine.

WARNING

To reduce risk of eye injury from flying chips or lung damage from breathing dust, always wear safety glasses and a respirator when operating this machine.

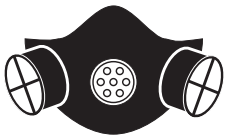

NOTICE

If you are not experienced with this type of machine, WE STRONGLY RECOMMEND that you seek additional training outside of this manual. Read books/magazines or get formal training before beginning any projects. Regardless of the content in this section, Grizzly Industrial will not be held liable for accidents caused by lack of training.

To complete a typical operation, the operator does the following:

1. Examines workpiece to make sure it is suitable for cutting.
2. Adjusts table tilt, if necessary, to correct angle of desired cut.
3. If using fence, adjusts it for width of cut and then locks it in place. If using miter gauge, adjusts angle and locks it in place.
4. Loosens guide post lock knob, adjusts upper blade guide height to just clear the workpiece (no more than ¼"), then retightens guide post lock knob.
5. Checks to make sure workpiece can safely pass all the way through blade without interference from other objects.
6. Puts on safety glasses and respirator.
7. Starts dust collector and bandsaw.
8. Holds workpiece firmly and flatly against both table and fence (or miter gauge), and then pushes workpiece into blade at a steady and controlled rate until cut is complete.

   Operator is very careful to keep fingers away from blade and uses a push stick to feed narrow workpieces.
9. Stops bandsaw.

Basic Functions of a Bandsaw

A properly adjusted bandsaw can be safer to operate than most other saws and performs many types of cuts with ease and accuracy. It is capable of performing the following types of cuts:

Straight Cuts

- Miters
- Angles
- Compound Angles
- Resawing
- Ripping
- Crosscutting

Irregular Cuts

- Simple and Complex Curves
- Duplicate Parts
- Circles
- Beveled Curves

Basic Cutting Tips

Here are some basic tips to follow when operating the bandsaw:

- Replace, sharpen, and clean blades often for best performance. Check guides, tension, and alignment settings periodically and adjust when necessary to keep the saw running in top condition.

- Use light and even pressure while cutting. Light feeding pressure makes it easier to cut straight and prevents undue friction or strain on the bandsaw components and the blade.

- Avoid twisting the blade when cutting around tight corners. Allow the blade to saw its way around the corners. Always use relief cuts when possible.

- Misusing the saw or using incorrect techniques (e.g. twisting the blade with the workpiece, incorrect feed rate, etc.) is unsafe and results in poor cuts.

Workpiece Inspection

Some workpieces are not safe to cut or may require modification before they are safe to cut. **Before cutting, inspect all workpieces for the following:**

- ***Material Type:*** This machine is intended for cutting natural and man-made wood products, laminate covered wood products, and some plastics. Cutting drywall or cementious backer board creates extremely fine dust and may reduce the life of the bearings. This machine is NOT designed to cut metal, glass, stone, tile, etc.; cutting these materials with a bandsaw may lead to injury.

- ***Foreign Objects:*** Nails, staples, dirt, rocks and other foreign objects are often embedded in wood. While cutting, these objects can become dislodged and hit the operator, cause kickback, or break the blade, which might then fly apart. Always visually inspect your workpiece for these items. If they can't be removed, DO NOT cut the workpiece.

- ***Large/Loose Knots:*** Loose knots can become dislodged during the cutting operation. Large knots can cause kickback and machine damage. Choose workpieces that do not have large/loose knots or plan ahead to avoid cutting through them.

- ***Wet or "Green" Stock:*** Cutting wood with a moisture content over 20% causes unnecessary wear on the blades, increases the risk of kickback, and yields poor results.

- ***Excessive Warping:*** Workpieces with excessive cupping, bowing, or twisting are dangerous to cut because they are unstable and often unpredictable when being cut. DO NOT use workpieces with these characteristics!

- ***Minor Warping:*** Workpieces with slight cupping can be safely supported if the cupped side is facing the table or the fence. On the contrary, a workpiece supported on the bowed side will rock during a cut and could cause kickback or severe injury.

Foot Brake

The Model G0568/G0569 is equipped with a foot brake (see **Figure 53**). Use the brake only in emergency situations to disconnect power to the motor and bring the blade to a halt.

⚠CAUTION

The foot brake will not stop the bandsaw wheels and blade instantly. DO NOT become over-confident and relax your safety awareness because of the foot brake feature.

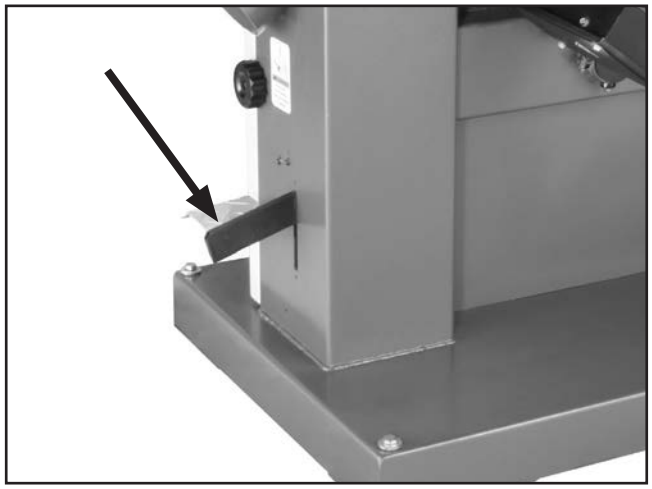

Figure 53. The foot brake is located below the dust collection port.

Key Switch

One of the most useful safety features of the Model G0568/G0569 is the key switch (see **Figure 54**). To disable the ON and OFF controls turn the key to "0" and remove the key if desired. To enable the ON and OFF controls, turn the key to "1". The OFF button functions also as an emergency stop switch. If at any time during operation of the bandsaw a safety hazard present itself, immediately press the OFF button, or use the foot brake to bring the blade to a halt.

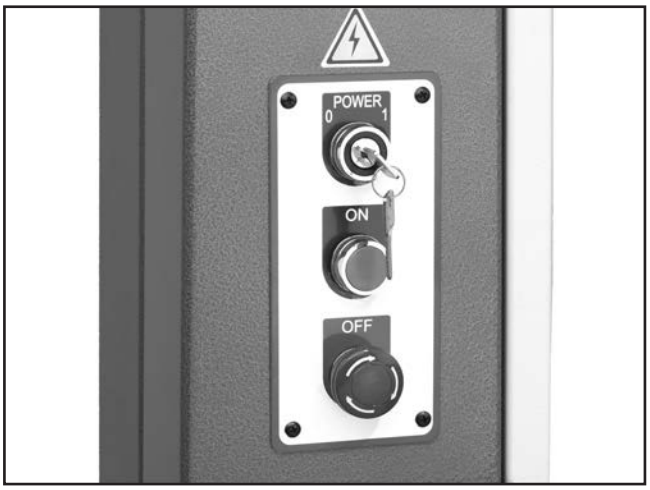

Figure 54. G0568/G0569 control panel.

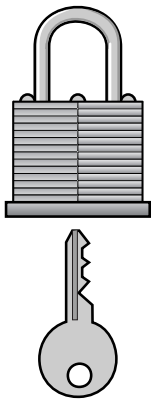

⚠CAUTION

Unsupervised children and visitors inside your shop could cause serious personal injury to themselves. Lock all entrances to the shop when you are away and DO NOT allow unsupervised children or visitors in your shop at any time!

Guide Post

The guide post, shown in **Figure 55**, connects the upper blade guide assembly to the bandsaw. The guide post allows the blade guide assembly to move up or down via a rack and pinion. In order to cut accurately, the blade guide assembly must be no more than 1" from the top of the workpiece at all times—this positioning provides the best support for the blade.

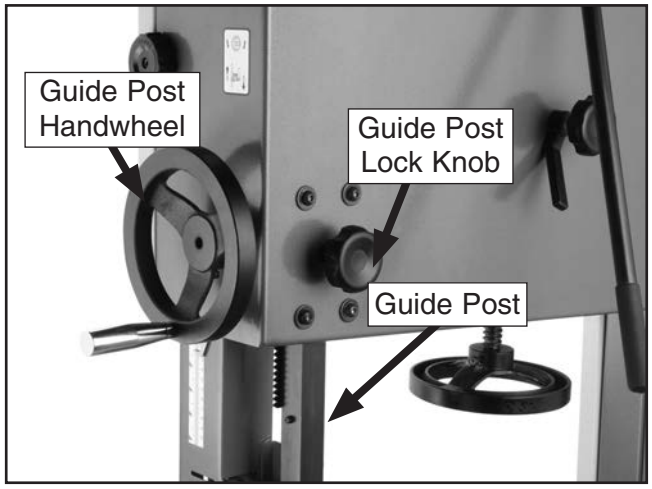

Figure 55. Guide post handwheel and lock knob.

To adjust guide post:

1. Make sure that the blade tension, blade tracking, support bearings, and blade guides are adjusted correctly.

2. Loosen the guide post lock knob shown in **Figure 55**.

3. Turn the guide post handwheel to raise or lower the guide post until the upper blade guide assembly is within 1" from the top of the workpiece.

4. Lock the guide post in place with the lock knob.

Ripping

Ripping is the process of cutting with the grain of the wood stock. For plywood and other processed wood, ripping simply means cutting down the length of the workpiece. For ripping, a wider blade is better. In most ripping applications, a standard raker tooth style will be sufficient.

To make a rip cut:

1. Adjust the fence to match the width of the cut on your workpiece and lock the fence in place.

2. Adjust the blade guide assembly to the correct height.

3. After all safety precautions have been met, turn the bandsaw ***ON***. Slowly feed the workpiece into the blade and continue with the cut until the blade is completely through the workpiece. **Figure 56** shows a typical ripping operation. **Note:** *If you are cutting narrow pieces, use a push stick to protect your fingers.*

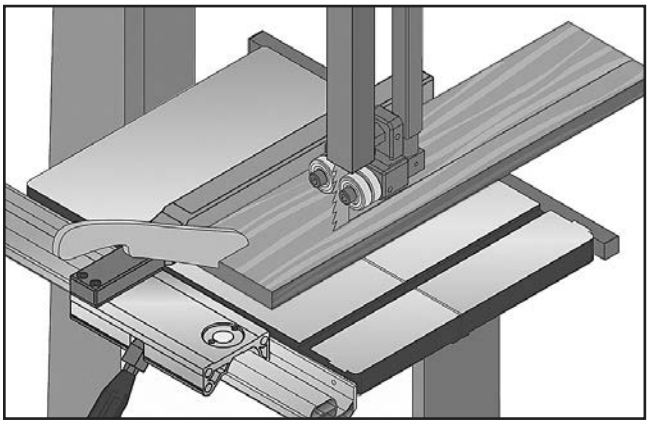

Figure 56. Example of typical ripping operation with a push stick.

⚠WARNING

NEVER place fingers or hands in the line of cut. In the event that something unexpected happens, your hands or fingers may slip into the blade. ALWAYS use a push stick when ripping narrow pieces. Failure to follow these warnings may result in serious personal injury!

Crosscutting

Crosscutting is the process of cutting across the grain of wood. For plywood and other processed wood, crosscutting simply means cutting across the width of the material.

To make a 90˚ crosscut:

1. Mark the workpiece on the edge where you want to begin the cut.

2. Adjust the blade guide assembly to the correct height and make sure the miter gauge is set to 0°.

3. Move the fence out of the way. Place the workpiece evenly against the miter gauge.

4. Hold the workpiece against the miter gauge and line up the mark with the blade.

5. After all safety precautions have been met, turn the bandsaw ***ON***. Slowly feed the workpiece into the blade and continue the cut until the blade is all the way through the workpiece. **Figure 57** shows a typical crosscutting operation.

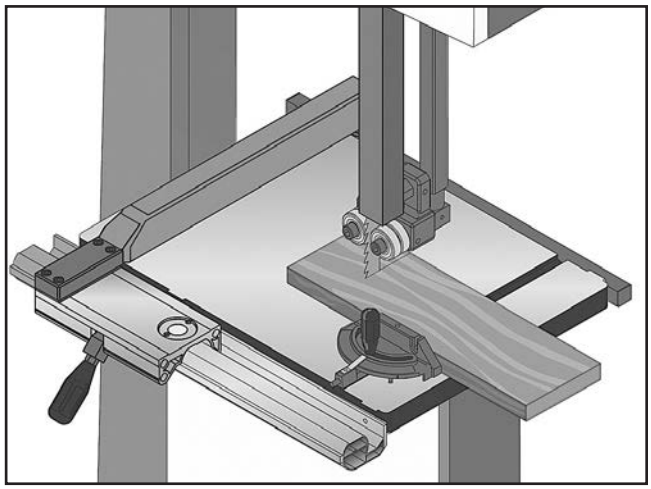

Figure 57. Example of crosscutting operation with miter gauge.

Resawing

Resawing (see **Figure 58**) is the process of cutting a board into two or more thinner boards. The maximum board width that can be resawn is limited by the maximum cutting height of the bandsaw.

One of the most important considerations when resawing is blade selection. Generally, wider blades are better. In most applications, a hook or a skip tooth style will be desirable. Choose blades with fewer teeth-per-inch (from 3 to 6), because they offer larger gullet capacities for clearing sawdust, reducing heat buildup and reducing strain on the motor.

⚠WARNING

When resawing thin pieces, a wandering blade (blade lead) can tear through the surface of the workpiece, exposing your hands to the blade teeth. Always use push blocks when resawing and keep your hands clear of the blade.

To resaw a workpiece:

1. Verify that the bandsaw is set up properly and that the fence is parallel to the blade.

2. Adjust the upper blade guide so it is about 1" above the workpiece with a minimum amount of blade exposed.

3. Install the optional Model H7528 resaw fence (see **Accessories**, **Page 48**), set it to the desired width of cut, and lock it in place.

4. Support the ends of the board if necessary.

5. Turn the bandsaw ***ON***.

6. Using push paddles and a push stick, keep pressure against the fence and table, and slowly feed the workpiece into the moving blade until the blade is completely through the workpiece (see **Figure 58**).

Figure 58. Example of resawing lumber.

Cutting Curves

When cutting curves, simultaneously feed and turn the stock carefully so that the blade follows the layout line without twisting. If a curve is so abrupt that it is necessary to repeatedly back up and cut a new kerf, use either a narrower blade or a blade with more TPI (teeth per inch), or make more relief cuts.

Always make short cuts first, then proceed to the longer cuts. Relief cuts will also reduce the chance that the blade will be pinched or twisted. Relief cuts are cuts made through the waste portion of the workpiece and are stopped at the layout line. As you cut along the layout line, waste wood is released from the workpiece, alleviating any pressure on the back of the blade. Relief cuts also make backing the workpiece out easier, if needed.

NOTICE

The list below displays blade widths and the corresponding minimum radii for those blade widths.

Width	Radius
1/8"	1/8"
3/16"	3/8"
1/4"	5/8"
3/8"	1 1/4"
1/2"	2 1/2"
5/8"	3 3/4"
3/4"	5 1/2"

Blade Lead

It is common for a bandsaw blade to wander off the cut line when sawing as shown in **Figure 59**. This is called blade lead.

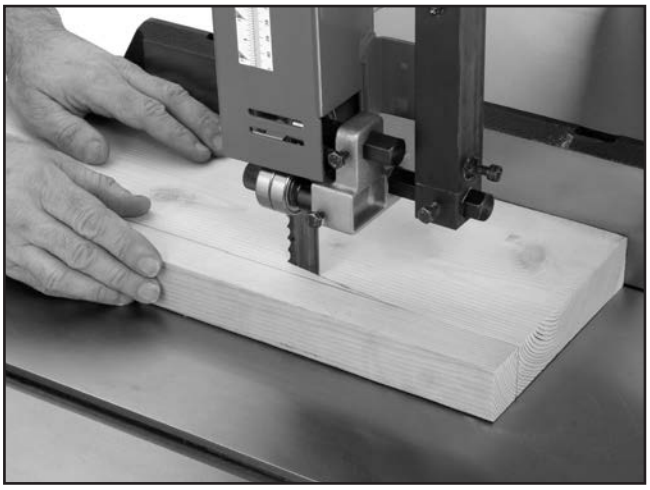

Figure 59. Blade leading away from line of cut.

To correct blade lead:

1. Check that the miter slot or fence is parallel to the blade line, and correct if necessary.

2. Check for proper blade tension. If the blade tension is correct and it is not convenient to replace the blade, compensate for lead by adjusting the table.

To shift the table:

1. On a scrap piece of wood, mark a line that is perpendicular to the front edge.

2. Cut the board on the line by pushing it into the blade with the miter gauge.

3. DISCONNECT BANDSAW FROM POWER!

4. Loosen the table mounting bolts. Shift the table to compensate for the blade lead.

5. Repeat **Steps 1-4** until the blade cuts straight.

6. Tighten the table bolts.

Table Tilt

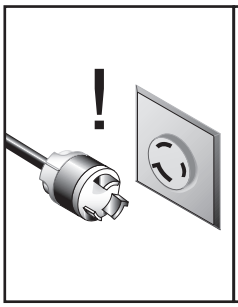

⚠WARNING

Personal injury or death can occur if the bandsaw starts during table adjustment. Disconnect power from the bandsaw before performing table adjustments.

The bandsaw table will tilt 5˚ left and 45˚ right to provide a wide range of cutting options.

To tilt the table:

1. DISCONNECT MACHINE FROM POWER!

2. Loosen the table tilt lock lever shown in **Figure 60**.

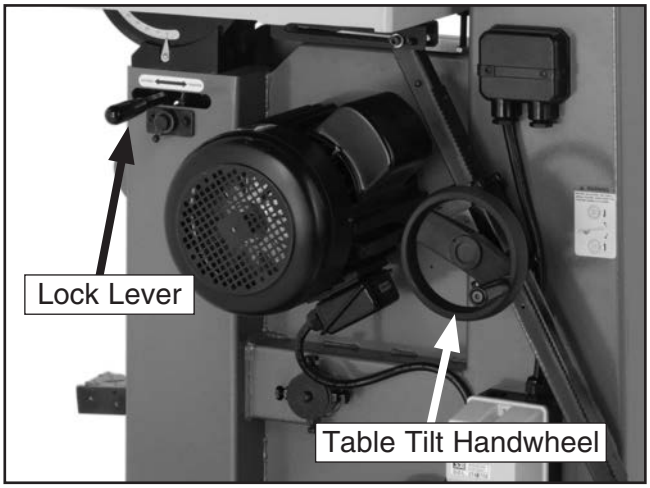

Figure 60. Table tilt controls.

3. To tilt the table to the right, turn the table tilt handwheel clockwise (see **Figure 60**).

4. To tilt the table to the left, turn the table tilt handwheel clockwise one turn, lower the positive stop bolt, then turn the handwheel counterclockwise.

5. Secure the table tilt lock lever.

6. Follow "Positive Stop" instructions on **Page 30** for resettting the stop bolt and table for horizontal (0º) operations.

Stacked Cuts

One of the benefits of a bandsaw is its ability to cut multiple copies of a particular shape by stacking a number of workpieces together. Before making stacked cuts, ensure that both the table and the blade are properly adjusted to 90° (see **Page 30**). Otherwise, any error will be compounded.

To complete a stacked cut:

1. Align your pieces from top to bottom to ensure that each piece has adequate scrap to provide a clean, unhampered cut.

2. Secure all the pieces together in a manner that will not interfere with the cutting. Hot glue on the edges works well, as do brad nails through the waste portion. (Be careful not to cut into the brads or you may break the blade!)

3. On the face of the top piece, lay out the shape you intend to cut.

4. Make relief cuts perpendicular to the outline of your intended shape in areas where changes in blade direction could strain the woodgrain or cause the blade kerf to bind.

5. Cut the stack of pieces as though you were cutting a single piece. Follow your layout line with the blade kerf on the waste side of your line, as shown in **Figure 61**.

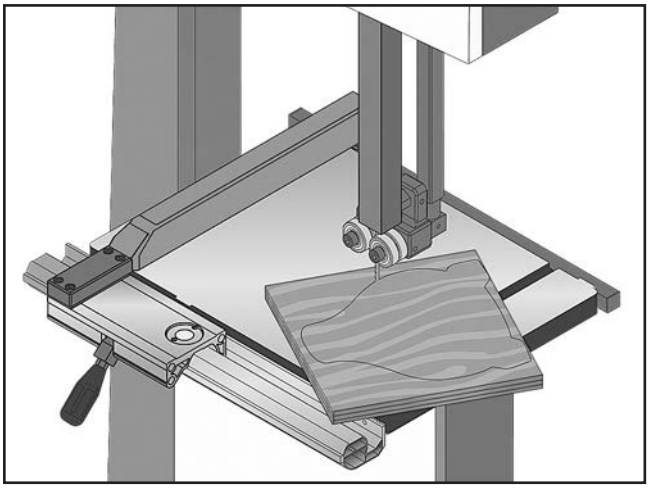

Figure 61. Typical stacked cut.

Blade Information

Selecting the right blade requires a knowledge of the various blade characteristics to match the blade with the particular cutting operation.

Blade Length

Measured by the circumference, blade lengths are usually unique to the brand of your bandsaw and the distance between wheels. The Model G0568/G0569 is designed for blades that are 179"–182" long. Refer to **Page 48** for blade replacements.

Blade Width

Measured from the back of the blade to the tip of the blade tooth (the widest point), blade width is often the first consideration given to blade selection. Blade width dictates the largest and smallest curve that can be cut, as well as how accurately it can cut a straight line.

The Model G0568/G0569 can use blades from ¼" to 1½" in width. Always pick the size of blade that best suits your application.

- ***Curve Cutting:*** Use the chart in **Figure 62** to determine the correct blade for curve cutting. Determine the smallest radius curve that will be cut on your workpiece and use the corresponding blade width.

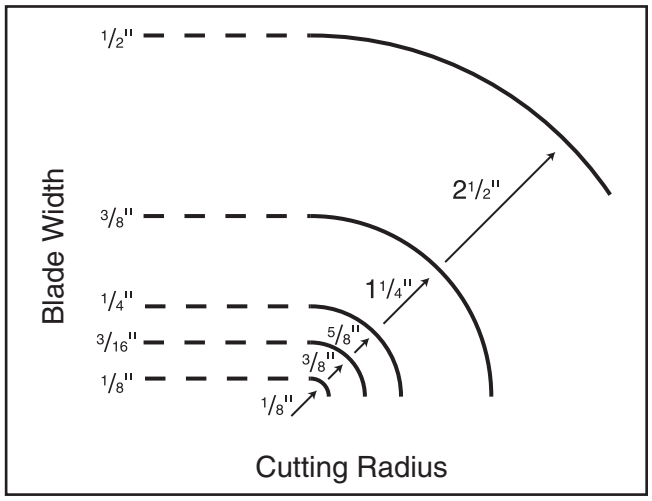

Figure 62. Blade width radii.

- ***Straight Cutting***: Use the largest width blade that you own. Narrow blades can cut tight curves (a small radius) but are not very good at cutting straight lines because they naturally wander (blade lead). However, larger blades are much better at cutting straight lines, but function poorly at cutting small curves because of their size.

Tooth Style

When selecting blades, another option to consider is the shape, gullet size, teeth set and teeth angle—otherwise known as "Tooth Style." **Figure 63** shows the three main categories of tooth style:

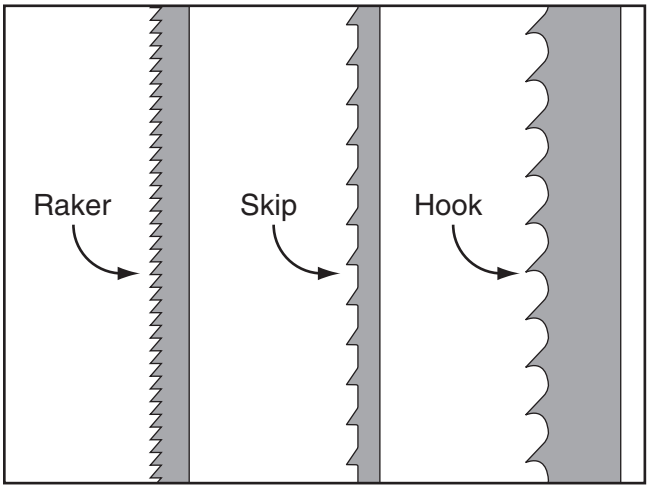

Figure 63. Raker, Skip & Hook tooth styles.

- ***Raker***: This style is considered to be the standard because the tooth size and shape are the same as the tooth gullet. The teeth on raker blades usually are very numerous, have no angle, and produce cuts by scraping the material; these characteristics result in very smooth cuts, but do not cut fast and generate more heat while cutting.

- ***Skip***: This style is similar to a raker blade that is missing every other tooth. Because of the design, skip toothed blades have a much larger gullet than raker blades, and therefore, cut faster and generate more heat. However, these blades also leave a rougher cut than raker blades.

- ***Hook***: The teeth on this style have a positive angle (downward) which makes them dig into the material, and the gullets are usually rounded for easier waste removal. These blades are excellent for the tough demands of resawing and ripping thick material.

Tooth Pitch

Usually measured as TPI (teeth per inch), tooth pitch determines the size of the teeth. More teeth per inch (fine pitch) will cut slower, but smoother; while fewer teeth per inch (coarse pitch) will cut rougher, but faster. As a general rule, choose blades that will have at least three teeth in the material at all times. Use fine pitched blades on harder woods and coarse pitched blades on softer woods.

Blade Care

A bandsaw blade is a delicate piece of steel that is subjected to tremendous strain. You can obtain longer use from a bandsaw blade if you give it fair treatment and always use the appropriate feed rate for your operation.

Be sure to select blades with the proper width, style, and pitch for each application. The wrong choice of blades will often produce unnecessary heat which will shorten the life of your blade.

A clean blade will perform much better than a dirty blade. Dirty or gummed up blades pass through the cutting material with much more resistance than clean blades. This extra resistance also causes unnecessary heat.

Blade Breakage

Many conditions may cause a bandsaw blade to break. Blade breakage is unavoidable, in some cases, since it is the natural result of the peculiar stresses that bandsaw blades are subjected to. Blade breakage is also due to avoidable circumstances. Avoidable breakage is most often the result of poor care or judgement on the part of the operator when mounting or adjusting the blade or support guides.

The most common causes of blade breakage are:

- Faulty alignment and adjustment of the guides.
- Forcing or twisting a wide blade around a curve of short radius.
- Feeding the workpiece into the blade too fast.
- Tooth dullness or absence of sufficient set.
- Incorrect tension.
- Top blade guide assembly set too high above the workpiece.
- Using a blade with a lumpy or improperly finished braze or weld.
- Continuously running the bandsaw when not in use.

Blade Changes

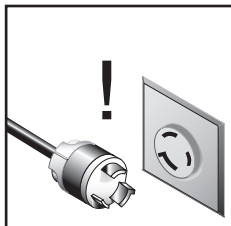

⚠WARNING

Always disconnect power to the machine when changing blades. Failure to do this may result in serious personal injury.

⚠CAUTION

All saw blades are dangerous and may cause personal injury. To reduce the risk of being injured, wear leather gloves when handling saw blades.

To remove a blade:

1. DISCONNECT MACHINE FROM POWER!
2. Release the blade tension.
3. Adjust the upper and lower guide bearings as far away as possible from the blade.
4. Open the upper and lower wheel covers, and with gloved hands, slide the blade off of both wheels.
5. Slide the blade through the slot in the table.

To replace a blade:

1. Slide the blade through the table slot, ensuring that the teeth are pointing forward and down toward the table.

   Note: *If the teeth will not point downward in any orientation, the blade is inside-out. Put on heavy gloves, remove the blade, and twist it right side-out.*

2. Slip the blade through the guides, and mount it on the upper and lower wheels (see **Figure 64**).

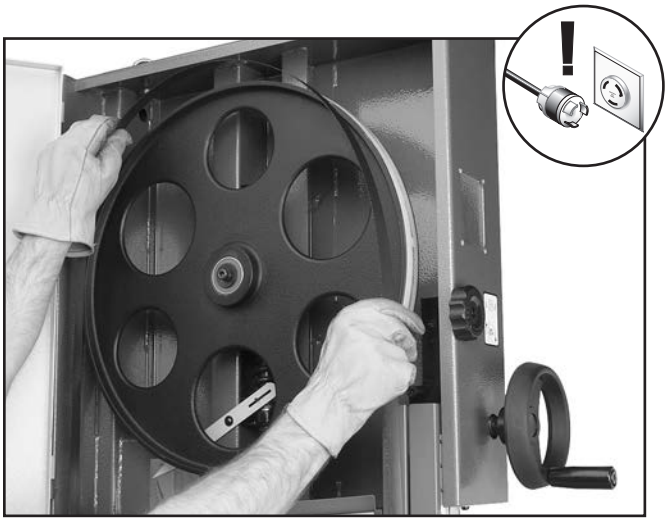

Figure 64. Example of placing blade on the wheels.

3. Adjust tension as described on **Page 34**.
4. Adjust tracking if needed (see **Page 25**).
5. Adjust the upper/lower guide bearings and the support bearings (see **Page 34**).
6. Close the wheel covers.

SECTION 5: ACCESSORIES

⚠WARNING

Installing unapproved accessories may cause machine to malfunction, resulting in serious personal injury or machine damage. To reduce this risk, only install accessories recommended for this machine by Grizzly.

NOTICE

Refer to our website or latest catalog for additional recommended accessories.

Replacement Blades

These replacement blades are milled for exact tooth set and are made with high-quality tool steel.

180" Carbon Steel Replacement Blades for the Model G0568/G0569.

MODEL	WIDTH	TPI
H6988	½"	3 HOOK
H6989	½"	4 HOOK
H6990	½"	6 HOOK
H6991	½"	10 RAKER
H6992	½"	14 RAKER
H6993	1"	2 HOOK
H6994	1"	6 HOOK
H6995	1"	10 RAKER
H6996	1¼"	1.3 HOOK

180" Timber Wolf® Replacement Blades for the Model G0568/G0569.

MODEL	WIDTH	TPI
H8626	½"	3 POS. CLAW
H8627	½"	4 POS. CLAW
H8628	½"	6 POS. CLAW
H8629	½"	10 RAKER
H8630	1"	3 POS. CLAW
H8631	1"	4 POS. CLAW
H8632	1"	10 RAKER
H8633	1¼"	¾" PITCH

Basic Eye Protection

T20501—Face Shield Crown Protector 4"
T20502—Face Shield Crown Protector 7"
T20503—Face Shield Window
T20451—"Kirova" Clear Safety Glasses
T20452—"Kirova" Anti-Reflective S. Glasses
T20456—DAKURA Safety Glasses, Black/Clear

Figure 65. Assortment of basic eye protection.

H4978—Deluxe Earmuffs - 27dB
H4979—Twin Cup Hearing Protector - 29dB
T20446—Ear Plugs 200 Pair - 31dB

Protect your hearing before its too late. Especially important if you or employees operate for hours at a time.

Figure 66. Hearing protection assortment.

order online at www.grizzly.com or call 1-800-523-4777

D2058A—Super Heavy-Duty SHOP FOX® Mobile Base
This patented, super heavy-duty mobile machine base is the strongest mobile base on the market. Minimum capacity of 18" x 24½" adjusts to maximum of 28½" x 33½". 1200 lb. capacity. This base is extremely stable with outrigger type supports and a four-wheel system. Weighs 38 lbs.

Note: The extension bars on the D2058A Mobile Base must be replaced with the D2246A Extension Bars to accommodate the length of the G0568 G0569 bandsaws.

Figure 67. D2058A SHOP FOX® Mobile Base.

D2246A—Extension Bars for Super Heavy-Duty SHOP FOX® Mobile Base
These 36" extension bars replace the standard length side rails on the D2058A Super Heavy-Duty Mobile Base. This allows the base to be assembled with a minimum capacity of 18" x 34" to a maximum capacity of 28" x 44", suitable for heavier and longer machines. Sold in pairs.

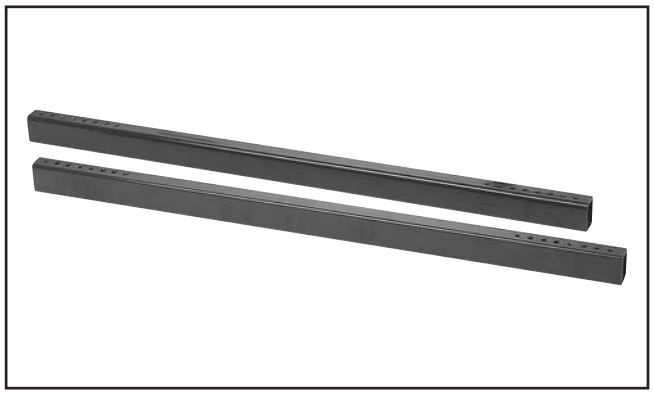

Figure 68. Model D2246A Extension Bars.

T1194—Resaw Fence w/Drift Bar
Anyone who's ever tried to rip or resaw on a bandsaw without adjusting for blade drift knows the natural line of cut is not always parallel to the fence. Forcing the wood against the fence will put strain on the blade and cause a wandering cut line. The easiest way to compensate for blade drive is to scribe a cut line on the edge or face of your workpiece and use a drift bar mounted to your fence. The drift bar acts as a thickness gauge and adjusts the angle of cut to the scribed line, ensuring a uniform thickness without putting undue strain on the blade. This includes the 19⅞"L x 5$^{15}/_{16}$"W resaw fence and drift bar.

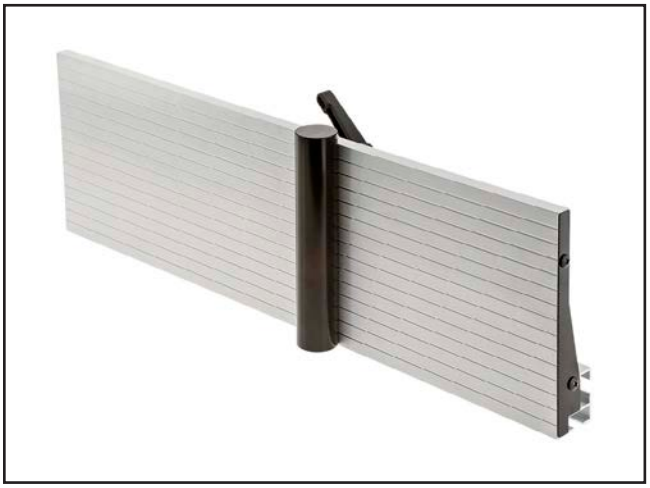

Figure 69. T1194 Resaw Fence with Drift Bar.

G5562—SLIPIT® 1 Qt. Gel
G5563—SLIPIT® 12 Oz. Spray
G2871—Boeshield® T-9 12 Oz. Spray
G2870—Boeshield® T-9 4 Oz. Spray
H3788—G96® Gun Treatment 12 Oz. Spray
H3789—G96® Gun Treatment 4.5 Oz. Spray

Figure 70. Recommended products for protecting unpainted cast iron/steel on machinery.

order online at www.grizzly.com or call 1-800-523-4777

SECTION 6: MAINTENANCE

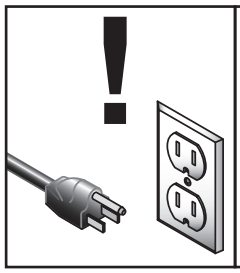

⚠WARNING

To reduce risk of shock or accidental startup, always disconnect machine from power before adjustments, maintenance, or service.

Schedule

For optimum performance from this machine, this maintenance schedule must be strictly followed.

Ongoing

To maintain a low risk of injury and proper machine operation, if you ever observe any of the items below, shut down the machine immediately and fix the problem before continuing operations:

- Loose mounting bolts.
- Damaged saw blade.
- Worn or damaged wires.
- Check/clean wheel brushes.
- Clean/protect table surface.
- Check lubrication points.
- Any other unsafe condition.

Monthly Check

- V-belt tension, damage, or wear.
- Clean/vacuum dust buildup from inside cabinet and off motor.

Cleaning

Cleaning the Model G0568/G0569 is relatively easy. Vacuum excess wood chips and sawdust, and wipe off the remaining dust with a dry cloth. If any resin has built up, use a resin dissolving cleaner to remove it. Treat all unpainted cast iron and steel with a non-staining lubricant after cleaning.

Unpainted Cast Iron

Protect the unpainted cast iron surfaces on the table by wiping the table clean after every use—this ensures moisture from wood dust does not remain on bare metal surfaces.

Keep tables rust-free with regular applications of products like G96® Gun Treatment, SLIPIT®, or Boeshield® T-9 (see **Section 5: Accessories** on **Page 48** for more details).

Wheel Brushes

The bandsaw is equipped with three lower brushes. The brushes should be checked daily and cleaned when they become dirty. There are adjustment brackets that allow the brushes to be adjusted for bristle wear. Refer to **Adjusting Wheel and Blade Brushes** on **Page 58** for adjustment details.

Lubrication

An essential part of lubrication is cleaning the components before lubricating them. This step is critical because dust and chips build up on lubricated components, which makes them hard to move. Simply adding more grease to built-up grime will not result in smooth moving parts. Clean the components in this section with an oil/grease solvent cleaner or mineral spirits before applying lubrication.

All bearings are sealed and permanently lubricated. Leave them alone until they need to be replaced.

Blade Guide Rack and Pinion

Lubrication Type ..... GL2 Grease or Equivalent
Amount .....Thin Coat
Frequency..... As Needed

To lubricate the blade guide rack and pinion:

1. DISCONNECT MACHINE FROM POWER!

2. Lower the blade guide until it reaches the table.

3. Wipe off any existing grease and sawdust buildup on the rack (see **Figure 71**).

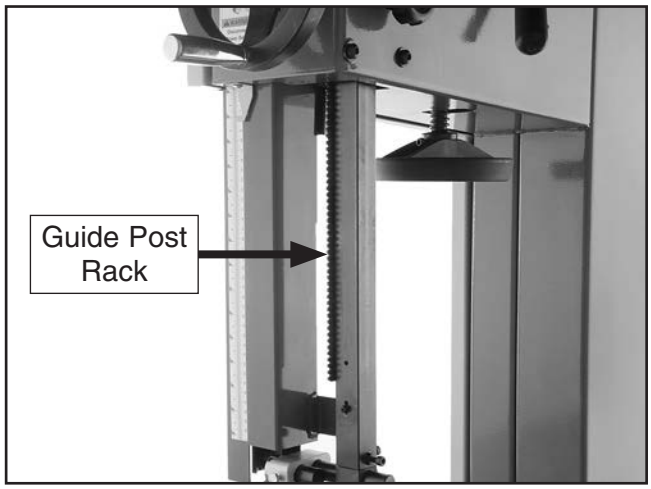

Figure 71. Example of rack lubrication location.

4. Apply a thin coat of light all-purpose grease to the rack.

5. Move the blade guide up and down several times and remove any excess grease to help prevent sawdust buildup.

Blade Tension Adjustment Assembly

Lubrication Type ..... GL2 Grease or Equivalent
Amount .....Thin Coat
Frequency..... As Needed

To lubricate the tension adjustment assembly:

1. DISCONNECT MACHINE FROM POWER!

2. Open the top wheel cover and look through the top of the wheel.

3. Wipe off any existing grease and sawdust buildup on the blade tension adjustment assembly and tension lever cam.

4. Apply a thin coat of grease to the tension adjustment assembly and tension lever cam (see **Figure 72**).

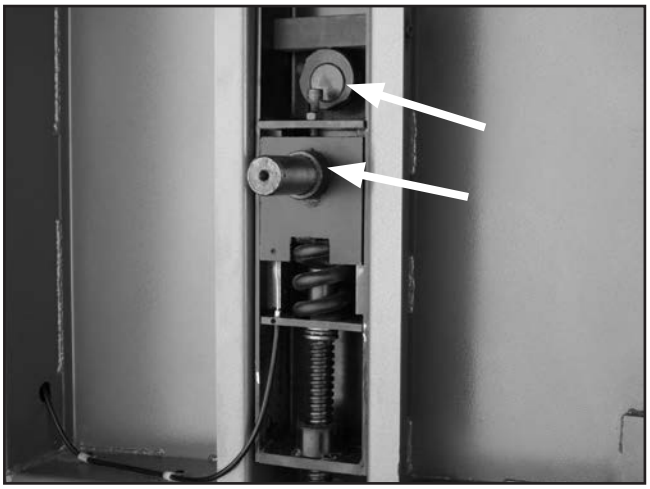

Figure 72. Tension adjustment assembly locations (top wheel removed for clarity).

Blade Tracking Knob

Lubrication Type ..... GL2 Grease or Equivalent
Amount .....Thin Coat
Frequency..... As Needed

To lubricate the blade tracking knob:

1. DISCONNECT MACHINE FROM POWER!

2. Unscrew the blade tracking knob 5 turns.

3. Wipe off any existing grease and sawdust buildup on the threads.

4. Apply a few dabs of a light all-purpose grease to the threads.

5. Re-adjust tracking (see **Blade Tracking** on **Page 25**).

Table Rack and Pinion

Lubrication Type ..... GL2 Grease or Equivalent
Amount .....Thin Coat
Frequency..... As Needed

To lubricate the table tilt rack and pinion assembly:

1. DISCONNECT MACHINE FROM POWER!

2. With the table perpendicular to the blade, wipe off all existing grease and sawdust buildup from the rack.

3. Move the table up to its maximum 45˚ angle and wipe (see **Figure 73**) off all existing grease and sawdust buildup from the rack.

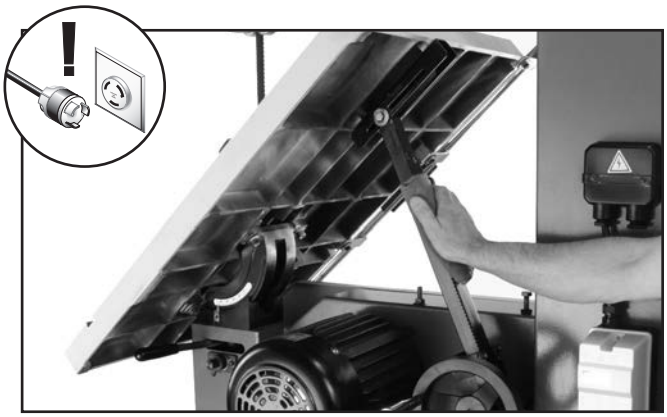

Figure 73. Example of lubricating table tilt rack and pinion assembly.

4. Apply a thin coat of light all-purpose grease to the rack.

5. Move the table up and down several times to distribute the grease, then wipe off any excess grease.

Trunnions

Lubrication Type ..... GL2 Grease or Equivalent
Amount .....Thin Coat
Frequency..... As Needed

To lubricate the trunnions:

1. DISCONNECT MACHINE FROM POWER!

2. Move the table up until it reaches its maximum 45˚ angle and wipe off all excess grease and sawdust from the trunnions.

3. Apply a very thin coat of light, all-purpose grease to the trunnions (see **Figure 74**).

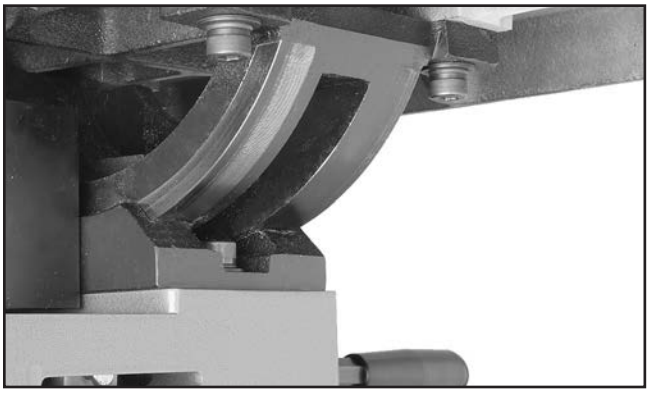

Figure 74. Trunnion lubrication location.

4. Move the table down and then back up to distribute the grease, then wipe off any excess grease from the trunnions.

SECTION 7: SERVICE

Review the troubleshooting procedures in this section if a problem develops with your machine. If you need replacement parts or additional help with a procedure, call our Technical Support. **Note:** *Please gather the serial number and manufacture date of your machine before calling.*

Troubleshooting

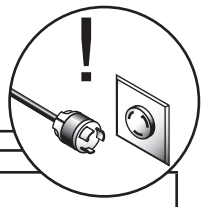

Symptom	Possible Cause	Possible Solution
Machine does not start, or power supply breaker immediately trips after startup.	1. Emergency stop button engaged/at fault. 2. Switch disabling key removed. 3. Door safety switch disengaged/at fault. 4. Thermal overload relay in mag switch tripped. 5. Break or short in wiring; or loose or corroded connections. 6. Plug or receptacle is corroded or miswired. 7. Power supply switched off/has incorrect voltage. 8. Motor connection wired incorrectly. 9. Contactor has poor contacts or is at fault. 10. Blown fuse/tripped circuit breaker. 11. Motor ON/OFF switch at fault. 12. Start capacitor has blown. 13. Centrifugal switch at fault. 14. Motor at fault.	1. Rotate button to reset/replace button. 2. Reinstall switch disabling key. 3. Close door or adjust/replace switch. 4. Allow relay/motor to cool. If necessary, press reset button inside switch. 5. Trace/replace broken or corroded wires; fix loose connections. 6. Correct the wiring. 7. Switch power supply on/verify voltage. 8. Wire motor correctly. Refer to inside junction box cover or **Page 65** (G0568) or **Page 66** (G0569). 9. Test all legs for power, test field coil, and fix contacts or replace if at fault. 10. Replace/reset fuse or circuit breaker. Repair possible short or circuit overload. 11. Replace switch. 12. Test/replace if at fault. 13. Adjust/replace centrifugal switch. 14. Test for shorted windings or bad bearings; repair or replace.
Main motor chatters during startup or during operation.	1. Phase converter (if used) wild wire connected to wrong terminal(G0569). 2. Power supply has incorrect voltage on one or more legs.	1. Connect wild wire to the machine power supply terminal that is not part of the switch coil circuit (G0569). 2. Contact electrician to check incoming voltage (G0568).
Machine operates in reverse.	1. Power connections wired out of phase (G0569).	1. Swap two power incoming power leads at the motor (G0569).

Symptom	Possible Cause	Possible Solution
Machine has excessive vibration or noise.	1. V-belt tension incorrect. 2. Bent, dull, or damaged blade. 3. Loose or damaged blade. 4. Blade weld contacting support bearing or blade guides. 5. Loose machine component. 6. Machine incorrectly mounted on floor. 7. Phase converter (if used) wild wire connected to wrong terminal(G0569). 8. Motor fan rubbing on fan cover. 9. V-belt worn or damaged. 10. Wheels not coplanar. 11. V-belt has a high spot. 12. Centrifugal switch out of adjustment; at fault. 13. Pulley loose or not in alignment; shaft bent. 14. Worn wheel bearing. 15. Wheel tires worn or incorrectly installed. 16. Wheels out of balance. 17. Motor bearings worn or damaged.	1. Tighten V-belt. See **Page 57.** 2. Replace blade (**Page 47**). 3. Tighten or replace blade. 4. Use file or stone to smooth and round the back of the blade. 5. Tighten loose component. 6. Level/shim base; tighten/adjust mounting hardware or feet. 7. Connect wild wire to the machine power supply terminal that is not part of the switch coil circuit (G0569) 8. Fix/replace fan cover; replace loose or damaged fan. 9. Replace V-belt. (Use link belts if possible.) See **Page 58**. 10. Adjust wheels coplanar (**Page 62**). 11. Replace/adjust the V-belt (**Page 58**). 12. Adjust/replace centrifugal switch. 13. Replace worn pulley, key, and shaft, and realign. 14. Check/replace wheel bearing. 15. Replace or re-install tires. 16. Replace wheels. 17. Replace motor bearings or replace motor.
Machine stalls or slows when operating.	1. Too much pressure when feeding workpiece. 2. Workpiece too moist or material not suitable for machine. 3. Workpiece is warped. 4. Fence incorrectly adjusted. 5. Belt(s) slipping. 6. Run capacitor at fault. 7. Motor connection wired incorrectly. 8. Motor is wired out of phase (G0569). 9. Motor overheated. 10. Contactor has poor contacts or is at fault. 11. Centrifugal switch at fault. 12. Motor at fault.	1. Reduce pressure when feeding workpiece. 2. Only cut wood and ensure moisture is below 20%. 3. Straighten workpiece or use a different one. 4. Adjust/calibrate fence. 5. Tension/replace belt(s); ensure pulleys are aligned. 6. Test/repair/replace. 7. Review wiring diagram on motor cover; correct wire connections. 8. Swap any two incoming power leads. 9. Let cool, clean motor, and reduce workload. 10. Test all legs for power, test field coil, and fix contacts or replace if at fault. 11. Adjust/replace centrifugal switch if available. 12. Test for shorted windings, bad bearings and repair or replace.
Miter bar binds in miter slot.	1. Miter slot dirty or gummed up.	1. Carefully clean miter slot.
Table does not tilt to 90 degrees.	1. Pointer or scale calibrated incorrectly. 2. Positive stop bolt not set correctly.	1. Calibrate pointer/scale at true 90 degrees (**Page 30**). 2. Adjust positive stop bolt.
Table does not tilt to 45 degrees.	1. Pointer or scale calibrated incorrectly. 2. Machine component blocking path.	1. Calibrate pointer/scale at true 45 degrees. 2. Remove component blocking table.

Symptom	Possible Cause	Possible Solution
Table hard to tilt.	1. Sawdust or pitch trapped between trunnion and base. 2. Metal burrs on trunnion.	1. Calibrate pointer/scale at true 45 degrees. 2. Remove burrs.
The cuts are rough, or show scoring.	1. Blade is overloaded and twists. 2. The blade TPI is too coarse. 3. The blade is loose and slipping on wheels. 4. Blade tracking is incorrect. 5. The blade has missing or bent teeth. 6. The blade has a faulty weld.	1. Decrease the feed rate. 2. Use the correct blade for material and speed of cut. 3. Adjust bade tension as required. 4. Adjust the blade tracking back to normal. 5. Replace the blade (**Page 47**). 6. Replace the blade (**Page 47**).
Blade or teeth break often.	1. Blade tension is incorrect. 2. Incorrect blade for application. 3. The feed is too heavy or blade speed is wrong. 4. Cutting corners too sharply. 5. Blades used when dull. 6. Blade tracking is wrong. 7. Blade guide adjustment at fault. 8. Inadequate blade support. 9. Blade welds at fault. 10. Wheel tires worn or incorrectly installed. 11. Fence or miter slot out of alignment with blade.	1. Adjust blade tension (**Page 34**). 2. Use correct blade for application. 3. Reduce feed rate or increase blade speed (**Page 38**). 4. Use a wider arc on outside cuts, or use relief cuts to make tight inside cuts. 5. Replace the blade (**Page 47**). 6. Adjust the blade tracking back to normal (**Page 25**). 7. Adjust blade guide bearings for correct blade support. 8. Adjust upper blade guide so it is as close as possible to workpiece. 9. Replace with blade from different manufacturer (**Page 47**). 10. Replace or re-install tires. 11. Align table miter slot and fence with blade (**Page 31**).
Blade wears on one side, slows, smokes or shows overheating.	1. Blade contacting table insert. 2. The blade guides are worn or mis-adjusted. 3. The blade has insufficient support. 4. Blade is installed backwards. 5. Blade spinning backwards due to out of phase wiring (3-phase only, G0569). 6. Too much side pressure when feeding workpiece. 7. The wheels are out of alignment. 8. Dull or incorrect blade. 9. Blade is bell-mouthed. 10. Fence not parallel with blade (pressure at blade backside). 11. Table top surface is not parallel or square to blade.	1. Adjust blade guide bearings to eliminate excess side pressure. Adjust table for correct blade clearance and miter slot alignment. 2. Tighten the blade guide bracket. 3. Tighten the blade guide as close to the workpiece as possible. 4. Check blade rotation as described in Test Run" and reverse blade if necessary. 5. Switch two of the current carrying wires at the terminal strip. 6. Feed workpiece straight into the blade. 7. Adjust the wheels so they are coplanar (**Page 62**). 8. Replace blade (**Page 47**). 9. Install new blade. 10. Adjust fence parallel with blade (**Page 32**). 11. Adjust/shim table/trunnion position until blade and table are parallel and square.
Sawdust buildup inside cabinet.	1. Clogged dust port. 2. Low CFM (airflow) from dust collection system.	1. Clean out dust port. 2. Repair ducting for leaks or clogs, move dust collector closer to machine, install a stronger dust collector.

Symptom	Possible Cause	Possible Solution
Blade tracks incorrectly, or comes off wheels.	1. Tracking is not adjusted properly. 2. Wheels are not coplanar. 3. Blade tension is too loose. 4. Blade guides need adjustment. 5. Feeding workpiece too fast. 6. Incorrect blade for bandsaw. 7. Blade is bell-mouthed, worn or dull. 8. Rubber tire on wheel is damaged or worn.	1. Adjust tracking (**Page 25**). 2. Adjust wheel coplanarity (**Page 62**). 3. Increase blade tension (**Page 34**). 4. Adjust blade guides (**Page 34**). 5. Feed workpiece slower (**Page 38**). 6. Install correct blade for machine. 7. Install new blade, and de-tension blade when not in use. 8. Replace rubber tires.
The cut is crooked, or the blade wanders (blade lead).	1. The feed pressure is too high or the blade speed is wrong. 2. The blade tension is low. 3. The blade is dull or damaged. 4. Inadequate blade support. 5. Incorrect blade for application. 6. The blade tracking is wrong. 7. Table is loose. 8. Fence or miter slot out of alignment with blade. 9. Blade guide alignment at fault.	1. Adjust feed rate and cutting speed as required. 2. Increase the blade tension (**Page 34**). 3. Replace the blade (**Page 47**). 4. Adjust upper blade guide so it is as close as possible to workpiece (**Page 34**). 5. Use wider blade. 6. Adjust the blade tracking back to normal. 7. TIghten table trunnion mounting bolts or tilt lock lever. 8. Align table miter slot and fence with blade. 9. Adjust blade guide bearings for correct blade support.

Checking and Tensioning V-Belts

To ensure optimum power transmission from the motor to the blade, the V-belts must be in good condition and operate under proper tension. The belts should be checked for cracks, fraying, and wear. Belt tension should be checked at least every 3 months—more often if the bandsaw is used daily.

Tools Needed:	**Qty**
Ruler	1
Hex Wrench 6mm	1
Wrench 13mm	1

To check the V-belts:

1. DISCONNECT MACHINE FROM POWER!

2. Open the wheel covers.

3. Note the condition of the V-belts. If the V-belts are cracked, frayed, or glazed; they should be replaced.

4. Push the center of the V-belts. Note the amount of deflection (see **Figure 75**). If deflection is more than ¾", tension the V-belt.

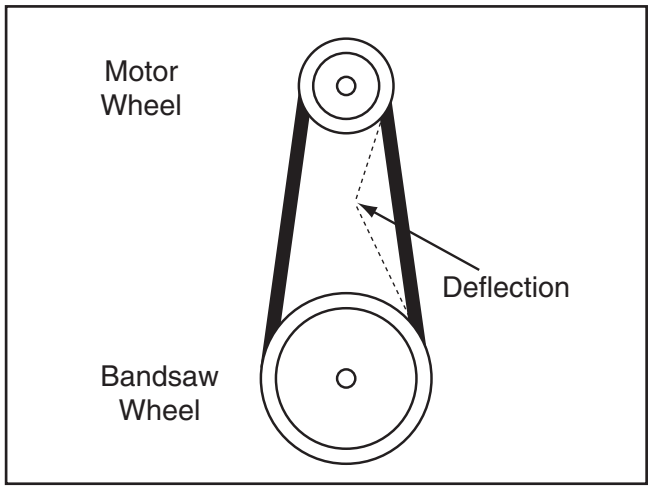

Figure 75. V-belt deflection.

To tension the V-belts:

1. DISCONNECT MACHINE FROM POWER!

2. Open the wheel covers.

3. Loosen the motor adjustment bolts shown in **Figure 76**.

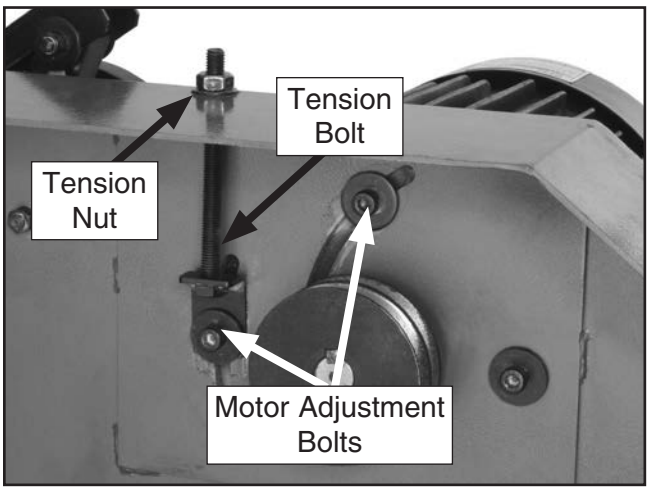

Figure 76. Motor mount bolts and tension bolt.

4. Adjust the belt tension:

   —If the belt is too loose, turn the tension nut clockwise to tighten the belts.

   —If the belt is too tight, turn the tension nut counterclockwise to loosen the belts

5. Push the center of the V-belt. If deflection is approximately ¾" with moderate pressure, then the tension is correct. If the deflection is more than ¾", repeat **Step 4**.

6. When the V-belt tension is correct, tighten the motor adjustment bolts, and close the wheel covers.

Replacing V-Belt

Tools Needed: **QTY**
Hex Wrench 6mm..... 1
Wrench 13mm 1

To replace the V-belt:

1. DISCONNECT MACHINE FROM POWER!

2. Open the wheel covers and remove the bandsaw blade.

3. Loosen the motor mount bolts shown in **Figure 76**, then turn the tension bolt counterclockwise, and pull the V-belts off.

4. Unthread the wheel cap screw shown in **Figure 77** and slide the lower wheel off of the bearing shaft.

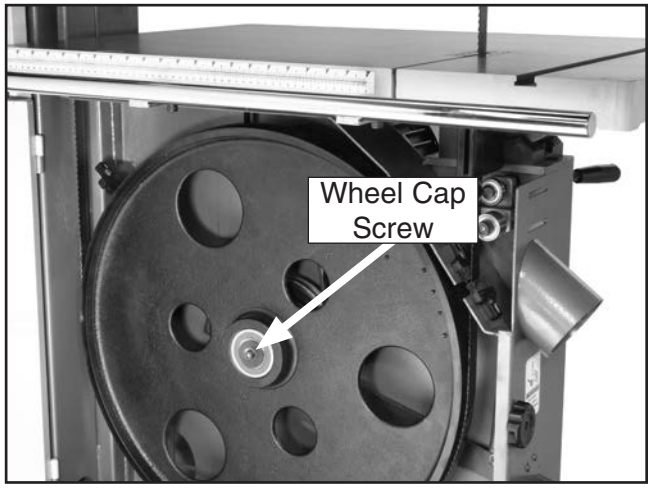

Figure 77. Wheel cap screw for removing the wheel.

5. Slip the old V-belts off of the wheel pulley and install the new V-belts in their place.

6. Install the lower wheel back onto the bearing shaft, tighten the wheel mount bolt, place the V-belts over the motor pulley, and turn the tension bolt clockwise to tighten the V-Belt tension.

7. When the tension is correct, tighten the motor hinge bolt and close the lower wheel cover.

Adjusting Wheel and Blade Brushes

The lower wheel compartment contains the brushes shown in **Figure 78**. These brushes are designed to sweep sawdust off the wheel tire and blade as the bandsaw is operating. In order to work properly, the brushes must be making contact with the wheel and blade.

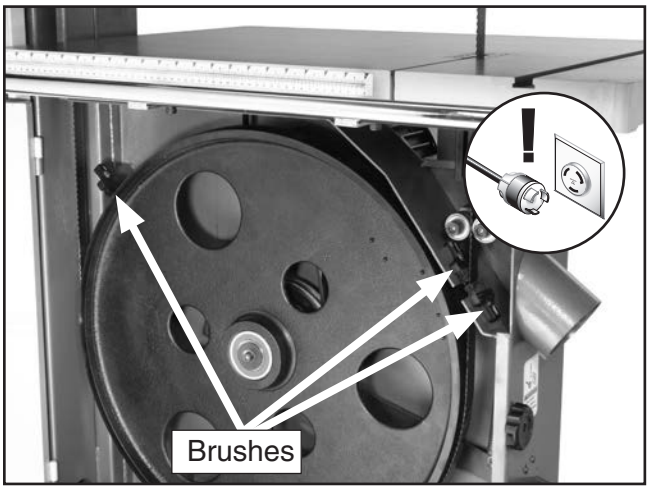

Figure 78. The wheel brush.

Tools Needed: **Qty**
Wrench/Socket 10mm 2

To adjust the brushes:

1. DISCONNECT MACHINE FROM POWER!

2. Open the lower wheel cover.

3. Loosen the bolt/nut that secures each brush in place.

4. Adjust each brush so it makes good contact with the wheel or blade—without bendng the bristles.

5. Tighten the bolt/nuts to secure each brush in place.

Adjusting Tension Lever

The quick release tension lever is setup correctly for use with the preinstalled 181" blade. However, if you install a different length blade, you will need to adjust the tension lever adjustment screw so the quick release tension lever works correctly.

Tools Needed: **Qty**
Hex Wrench 6mm..... 1
Wrench 13mm 2

To adjust the tension lever:

1. DISCONNECT MACHINE FROM POWER!

2. Open the wheel covers, remove the bandsaw blade, then install the new one (refer to **Blade Changes** on **Page 47**).

3. Loosen the jam nut on the tension adjustment screw 7-10 turns.

4. Put the quick release tension lever in the down (engaged) position, then turn the blade tension handwheel until the blade tension matches the mark on the blade tension scale for the appropriate blade thickness.

5. Thread the tension adjustment screw (see **Figure 79**) down until it contacts the wheel block plate, then back it off 1-2 turns.

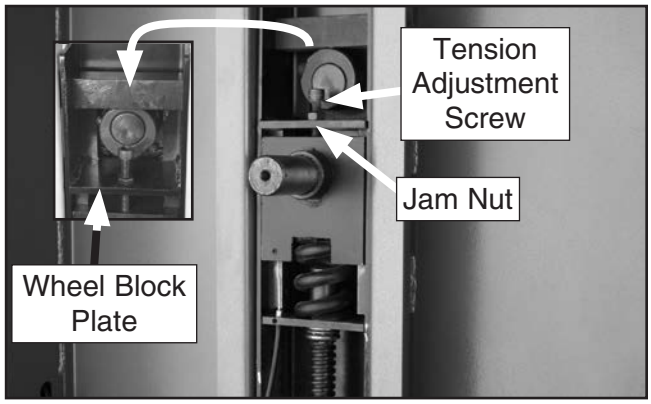

Figure 79. Example of quick release tension lever adjustment screw.

6. Tighten the jam nut.

Adjusting Guide Post Travel

The guide post assembly should remain parallel with the blade front-to-back and side-to-side along its length of travel. If it does not, follow these instructions to correctly adjust the guide post.

Tools Needed:
Machinist's Square 1
Small Fine Ruler..... 1
Hex Wrench 5mm..... 1
Metal Shims..... As Needed

To check/adjust the guide post parallel side-to-side with the blade:

1. DISCONNECT MACHINE FROM POWER!

2. Tighten the blade to the tension that will be used during operation.

3. Loosen the guide post lock knob, raise the guide post, lock it in place, then place a machinist's square on the table next to the side of the blade as illustrated in **Figure 80**.

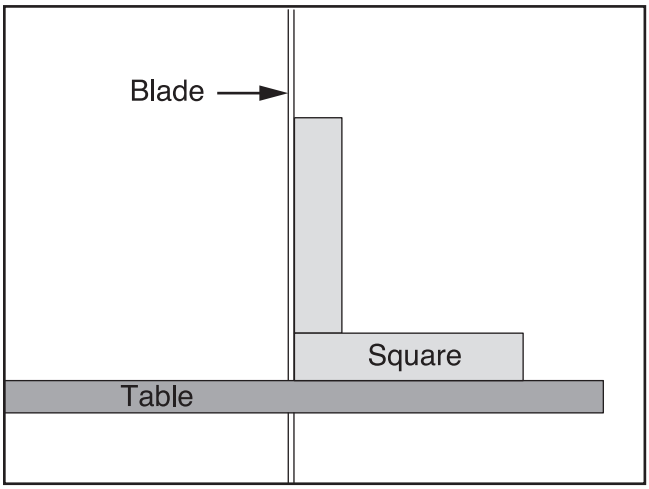

Figure 80. Squaring table to blade.

4. Adjust the table square with the blade using the table tilt handwheel, then secure it with the table tilt lock lever.

5. Loosen the guide post lock knob, lower the guide post to within 1" of the table top, then tighten the knob.

6. Place a machinist's square on the table next to the right hand side of the guide post, as shown in **Figure 81**.

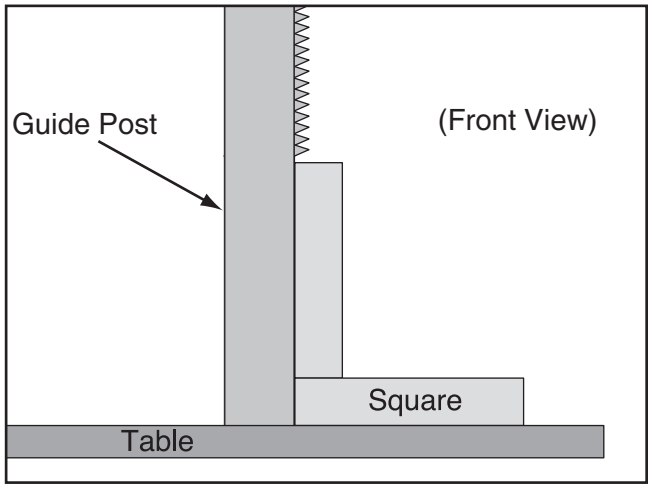

Figure 81. Example of checking guide post squareness.

—If there is no gap between the square and the guide post along its full length, no adjustments need to be made. Proceed to "To check/adjust if the guide post is parallel with the blade front-to-back."

—If there is a gap between the square and the guide post, the guide post is not parallel to the blade. Go to **Step 7**.

7. Loosen each of the four screws shown in **Figure 82** ¼ turn.

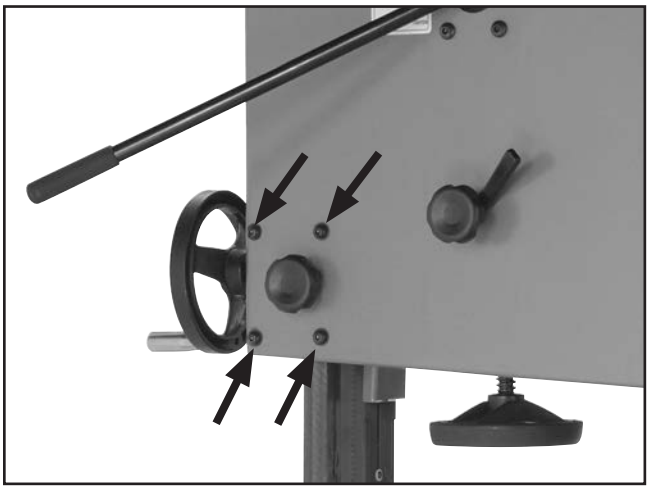

Figure 82. Guide post adjustment screws.

8. Gently tap the lower part of the guide post in the appropriate direction until there is no gap between the square and the guide post.

9. Tighten the screws shown in **Figure 82**.

To check/adjust the guide post parallel with the blade front-to-back:

1. DISCONNECT MACHINE FROM POWER!

2. Loosen the guide post lock knob, lower the blade guide assembly to within 1" of the table top, then tighten the lock knob.

3. Remove the screws that secure the guide post guard and move it up and out of the way.

4. Measure the distance "A" between the top front face of the guide post rack and the back of the blade (see **Figure 83**).

5. Measure the distance "B" between the bottom front face of the guide post rack and the back of the blade (see **Figure 83**).

   —If the measurements taken in **Steps 4–5** are *equal*, no adjustments need to be made. Go to **Step 9**.

   —If the measurements taken in **Steps 4–5** are *not equal*, go to **Step 6**.

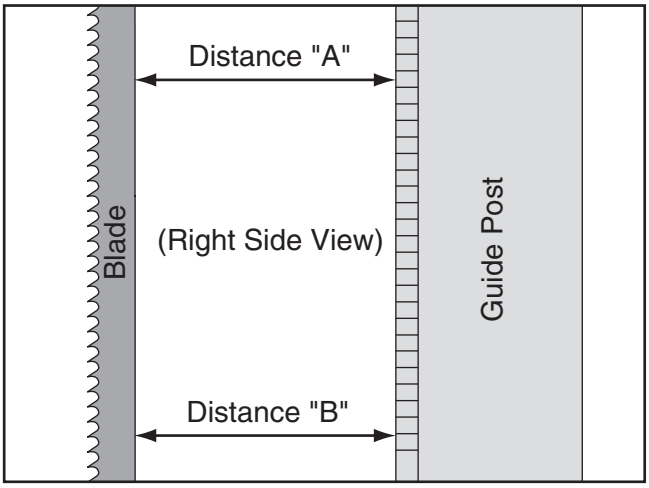

Figure 83. Example of measuring distance between rack and blade at top of guide post.

6. Place the guide post guard on top of the guide post assembly so you can access the guide post bracket.

7. Loosen the four screws shown in **Figure 82** enough to fit metal shims between the frame and the guide post bracket (see **Figure 84**).

   —If the guide post to blade distance is greater at the bottom than at the top, place a shim between the bottom of the bracket and the frame (Shim "A"). This will tilt the bottom of the guide post toward the blade.

   —If the guide post to blade distance is less at the bottom than at the top, place a shim between the top of the bracket and the frame (Shim "B"). This will tilt the bottom of the guide post away from the blade.

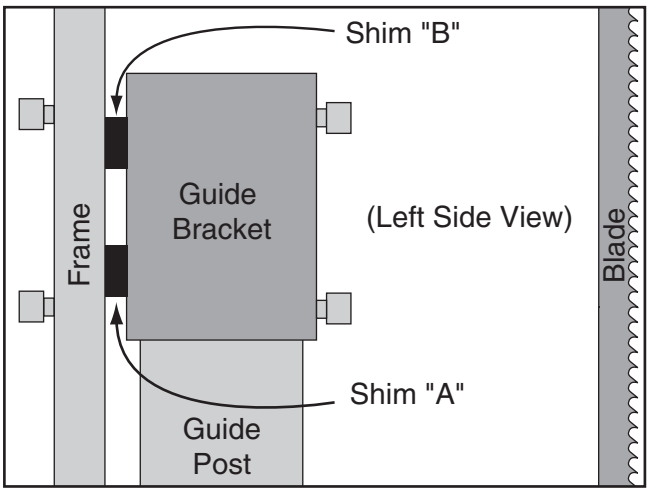

Figure 84. Location for placing shims.

8. Tighten the four screws shown in **Figure 82**, then repeat **Steps 4–5**.

   —If the measurements are *equal*, go to **Step 9**.

   —If the measurements are *not equal*, continue adding shims as needed until guide post rack to blade distance is the same at the top and bottom.

9. Reinstall the guide post guard with the screws removed in **Step 3**.

Wheel Alignment

Wheel alignment is one of the most critical factors for optimal performance from your bandsaw.

Heat, vibration, wandering, blade wear, tire wear and overall bandsaw wear are considerably decreased when the wheels are properly aligned or "coplanar."

Coplanar wheels automatically track the blade by balancing it on the crown of the wheel. This is known as coplanar tracking.

Components and Hardware Needed: Qty
70¼" Long Wood 2 x 4 1

Tools Needed:
Wrench 17mm 1
Tape Measure 1
Circular Saw 1
Jointer 1

To check if your wheels are coplanar:

1. The body of the bandsaw does not allow you to place a regular straightedge across both wheels at the same time. We've found a simple way to overcome this situation. All you need is a 70¼" x 2" x 4" board, a jointer and a circular saw. Run the 2" x 4" across a jointer on the side to be placed against the wheels, then cut a 1½" x 28¼" notch out of the center. Refer to **Figure 85** for more details on how to make this gauge.

2. After you've made your coplanarity gauge, remove the fence and table, then open both wheel covers.

3. Make sure the guide blocks and rear support bearings are away from the blade, then tighten your blade to the tension that it will be used during operation.

4. Place your gauge up against both wheels in the positions shown in **Figure 86**.

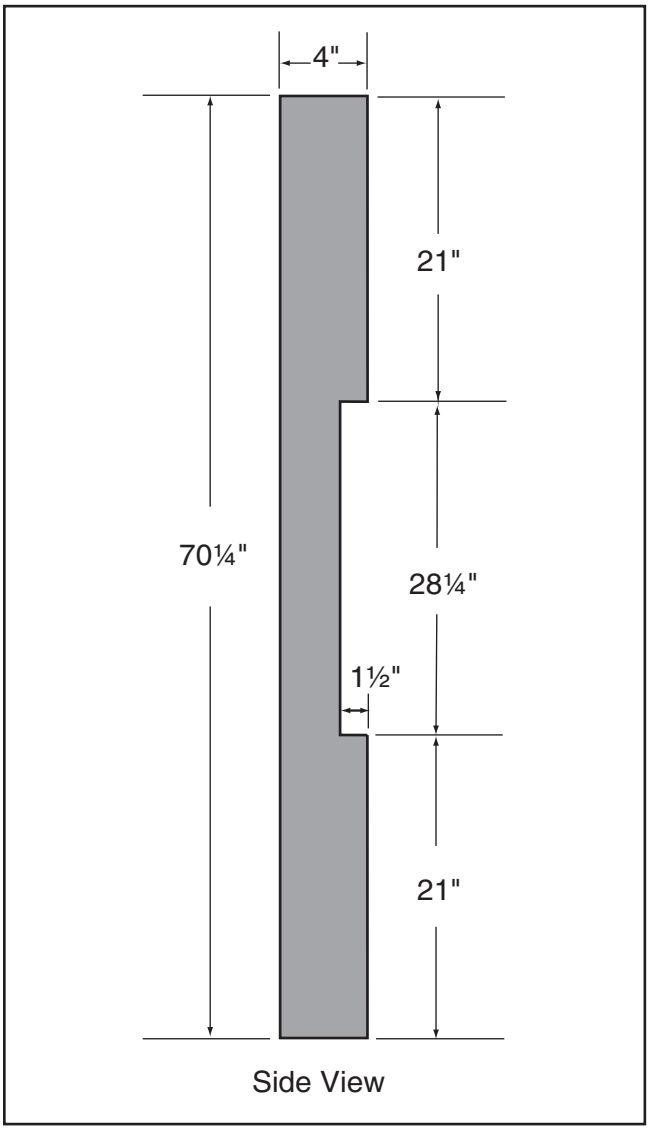

Figure 85. Dimensions of coplanarity gauge.

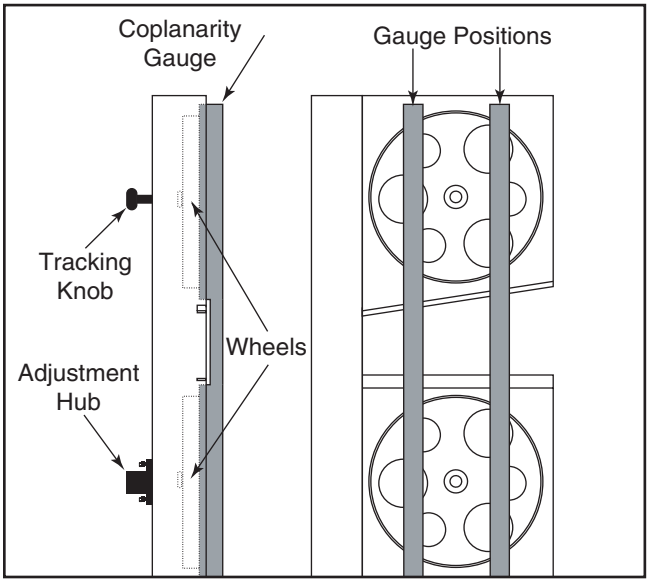

Figure 86. Checking for coplanarity.

5. The adjustment hub allows you to move the lower wheel in the desired direction. Turning all the bolts clockwise in equal amounts pushes the wheel forward. Turning all the bolts counterclockwise brings the wheel backward, closer to the adjustment hub. Used individually, each bolt can control the direction that the wheel tilts.

6. Adjust the tracking knob to get both wheels parallel. If the wheels won't go parallel to each other, then move the lower wheel at the adjustment hub so they line up.

7. If the wheels will go parallel but not coplanar, then move the lower wheel at the adjustment hub (see **Figure 87**) as necessary.

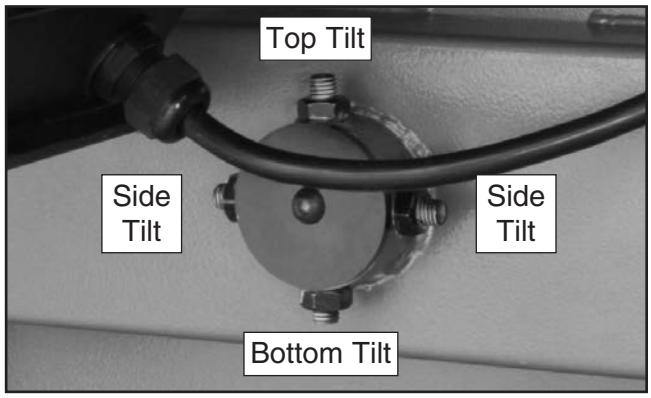

Figure 87. Lower wheel adjustment control.

8. **Figure 88** shows the positions of the wheels when coplanar. When your wheels are coplanar, readjust the guide blocks and rear support bearings, and replace the wheel covers.

Note: *The blade may track slightly off center when the wheels are coplanar. This is natural because the blade will be balanced on the crown of the tire, rather than just in the center of the tire. This will be more noticeable with larger blades.*

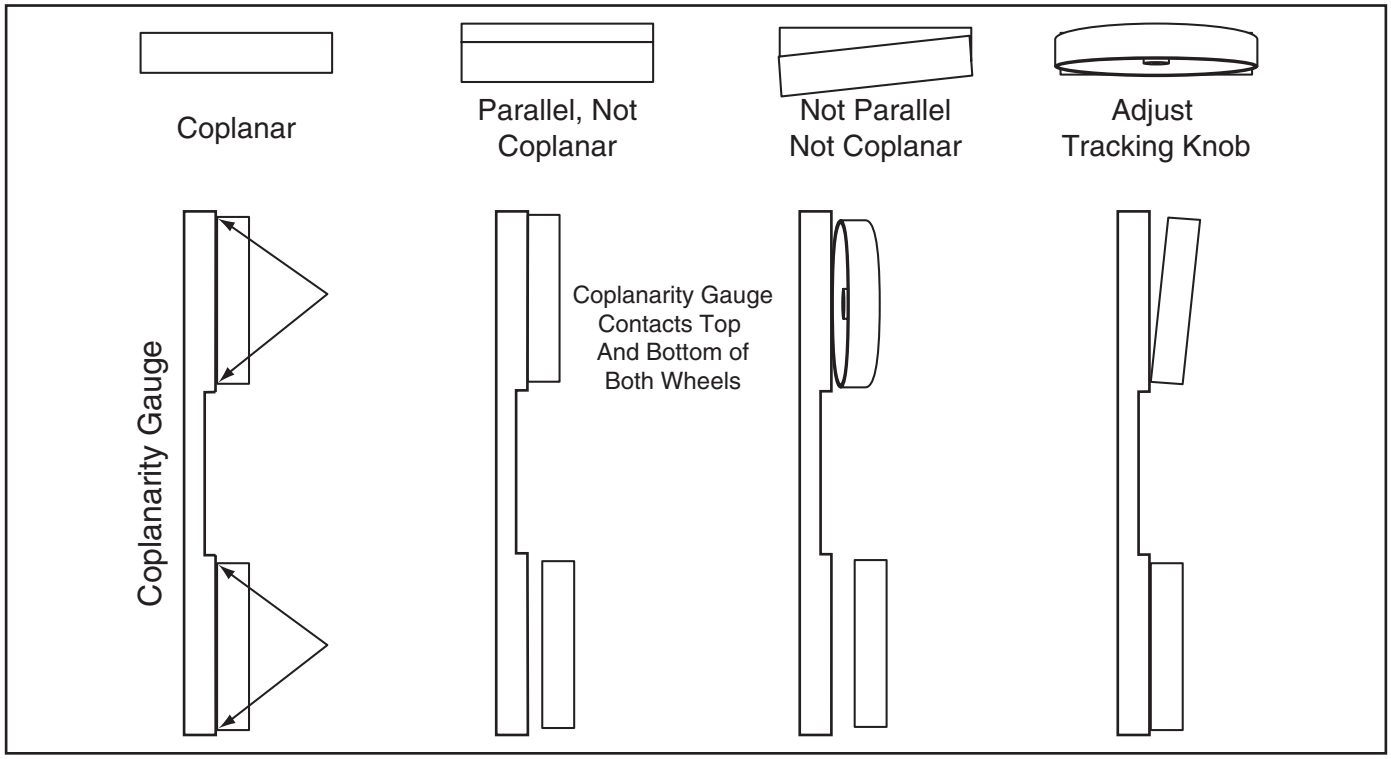

Figure 88. Coplanarity diagram.

SECTION 8: WIRING

These pages are current at the time of printing. However, in the spirit of improvement, we may make changes to the electrical systems of future machines. Compare the manufacture date of your machine to the one stated in this manual, and study this section carefully.

If there are differences between your machine and what is shown in this section, call Technical Support at (570) 546-9663 for assistance BEFORE making any changes to the wiring on your machine. An updated wiring diagram may be available. **Note:** *Please gather the serial number and manufacture date of your machine before calling. This information can be found on the main machine label.*

⚠WARNING
Wiring Safety Instructions

SHOCK HAZARD. Working on wiring that is connected to a power source is extremely dangerous. Touching electrified parts will result in personal injury including but not limited to severe burns, electrocution, or death. Disconnect the power from the machine before servicing electrical components!

MODIFICATIONS. Modifying the wiring beyond what is shown in the diagram may lead to unpredictable results, including serious injury or fire. This includes the installation of unapproved aftermarket parts.

WIRE CONNECTIONS. All connections must be tight to prevent wires from loosening during machine operation. Double-check all wires disconnected or connected during any wiring task to ensure tight connections.

CIRCUIT REQUIREMENTS. You MUST follow the requirements at the beginning of this manual when connecting your machine to a power source.

WIRE/COMPONENT DAMAGE. Damaged wires or components increase the risk of serious personal injury, fire, or machine damage. If you notice that any wires or components are damaged while performing a wiring task, replace those wires or components.

MOTOR WIRING. The motor wiring shown in these diagrams is current at the time of printing but may not match your machine. If you find this to be the case, use the wiring diagram inside the motor junction box.

CAPACITORS/INVERTERS. Some capacitors and power inverters store an electrical charge for up to 10 minutes after being disconnected from the power source. To reduce the risk of being shocked, wait at least this long before working on capacitors.

EXPERIENCING DIFFICULTIES. If you are experiencing difficulties understanding the information included in this section, contact our Technical Support at (570) 546-9663.

NOTICE

The photos and diagrams included in this section are best viewed in color. You can view these pages in color at www.grizzly.com.

COLOR KEY

BLACK	Bk	BLUE	Bl	YELLOW	Yl	LIGHT BLUE	Lb
WHITE	Wt	BROWN	Br	YELLOW GREEN	Yg	BLUE WHITE	Bw
GREEN	Gn	GRAY	Gy	PURPLE	Pu	TUR-QUOISE	Tu
RED	Rd	ORANGE	Or	PINK	Pk		

G0568 Wiring Diagram

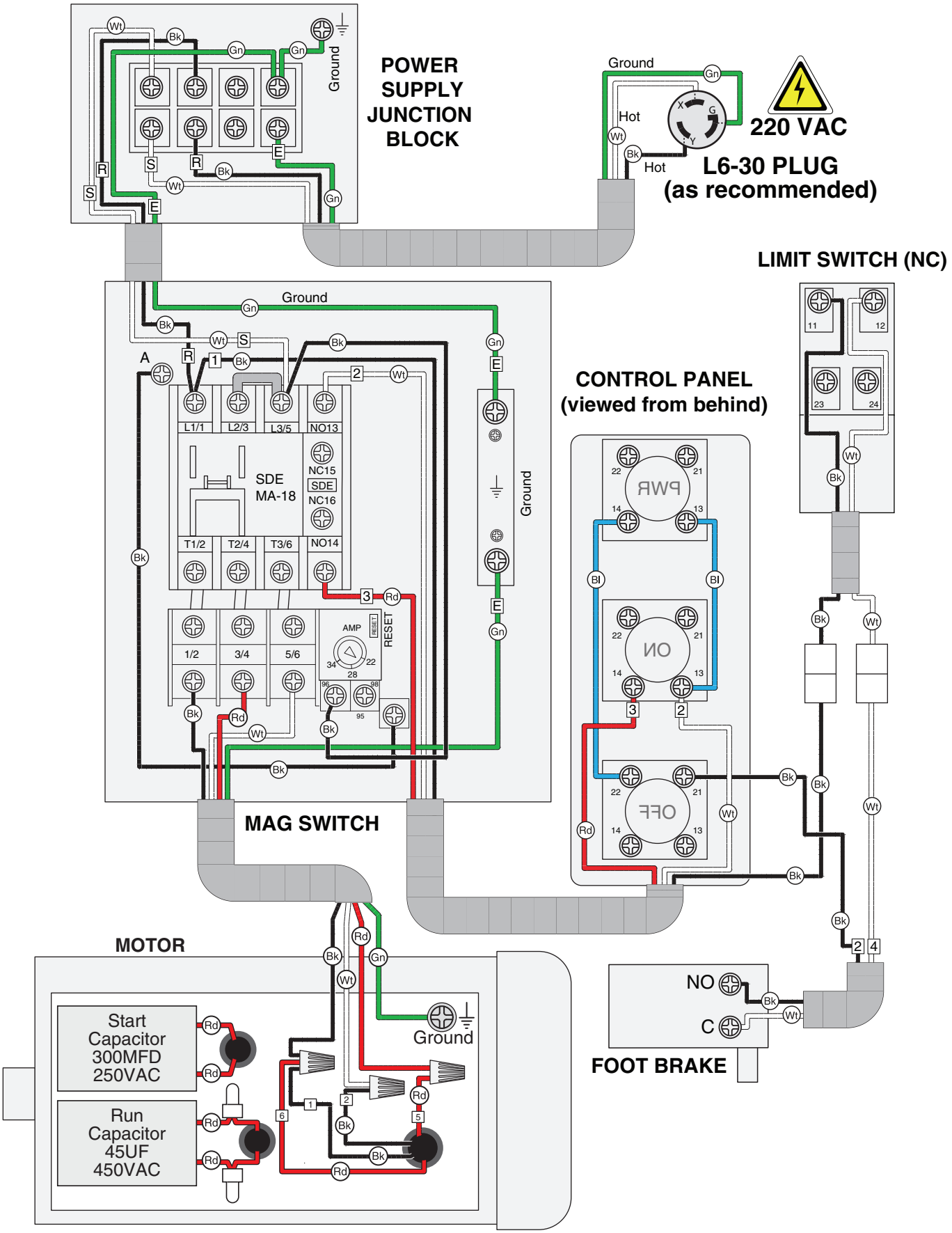

STOP *READ ELECTRICAL SAFETY ON PAGE 64!*

G0569 Wiring Diagram 220V

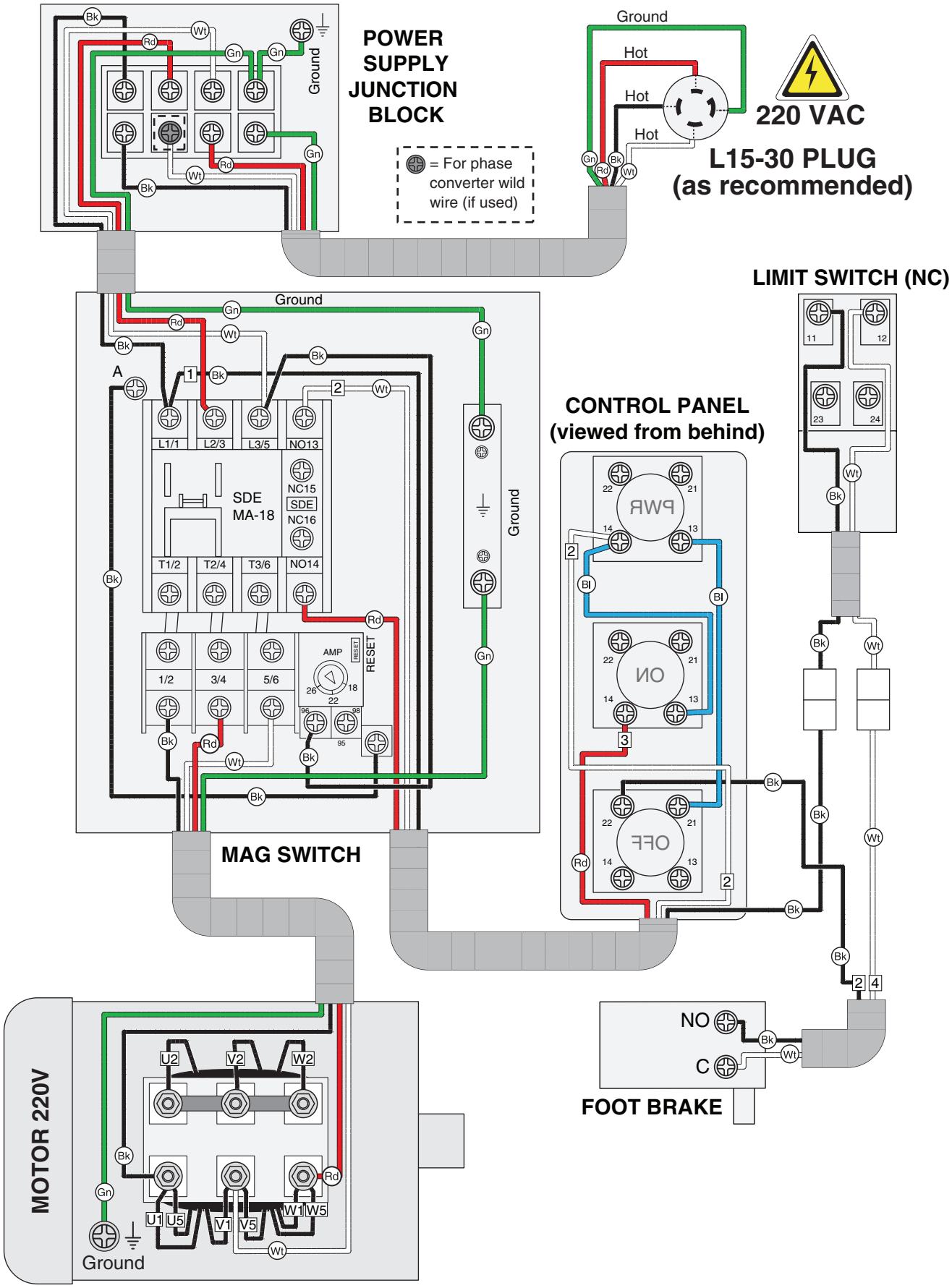

STOP **READ ELECTRICAL SAFETY ON PAGE 64!**

G0569 Wiring Diagram 440V

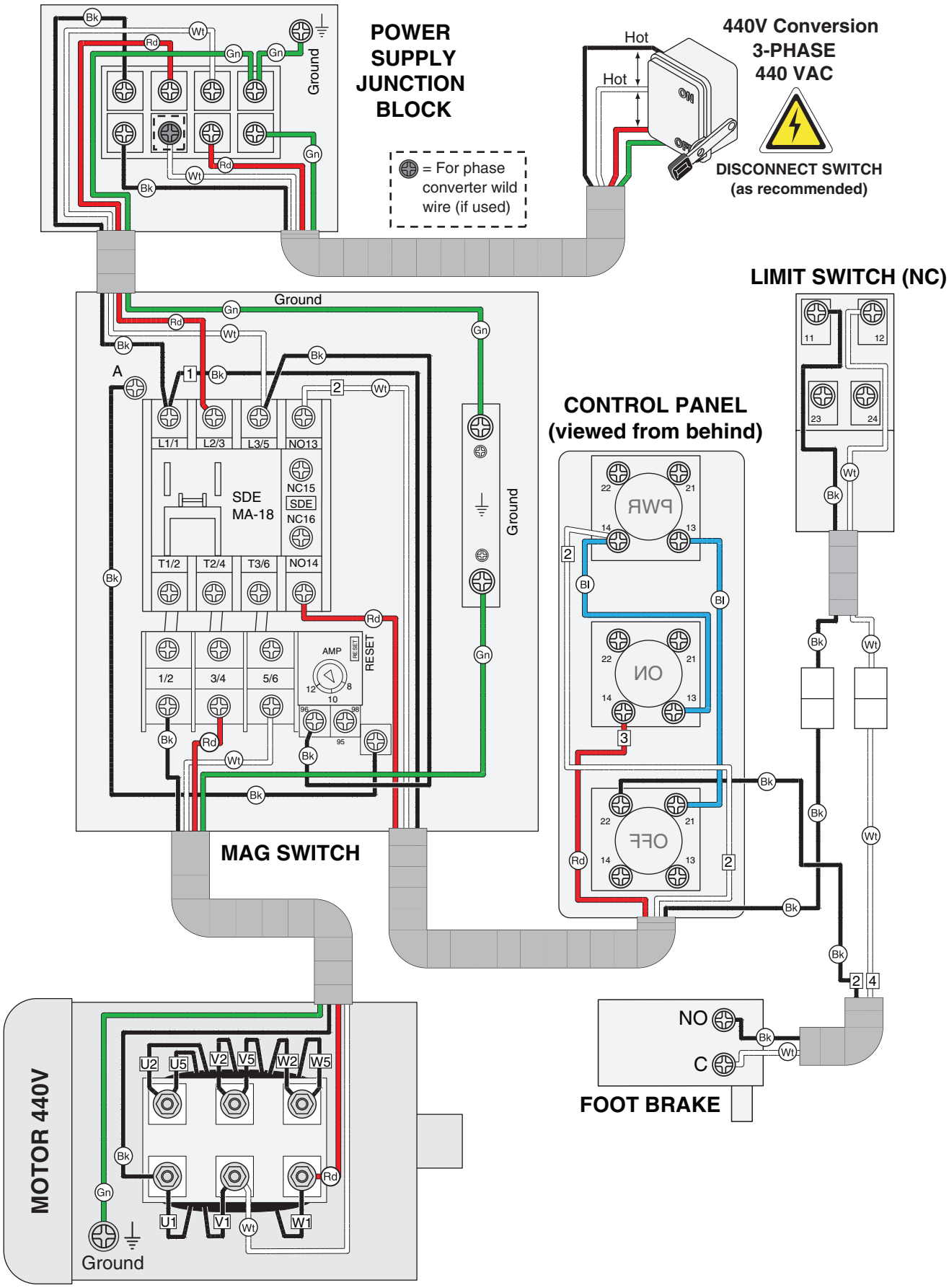

STOP *READ ELECTRICAL SAFETY ON PAGE 64!*

Main

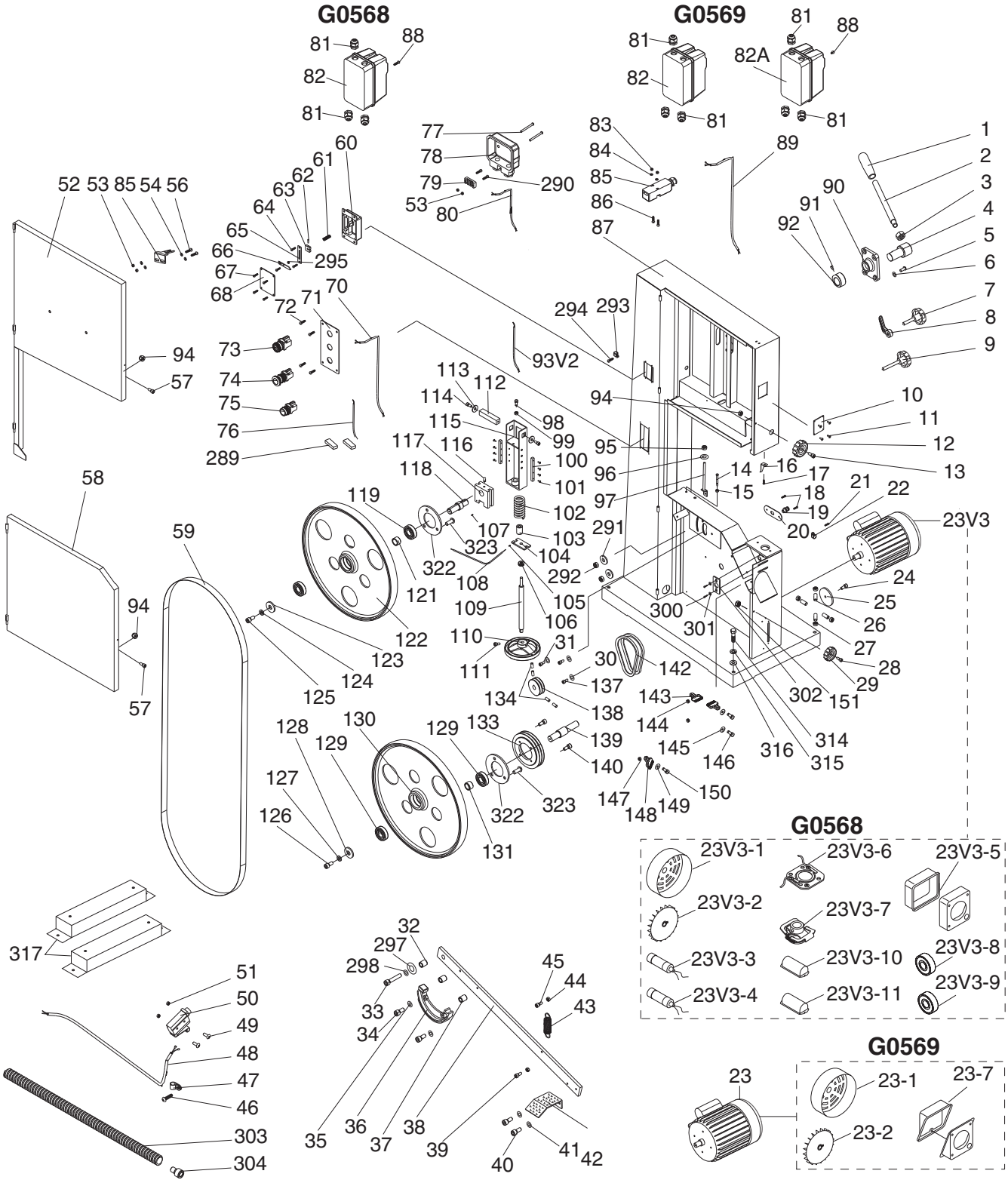

BUY PARTS ONLINE AT GRIZZLY.COM!
Scan QR code to visit our Parts Store.

Main Parts List

REF	PART #	DESCRIPTION
1	P0568001	HANDLE KNOB M16-1.5
2	P0568002	HANDLE SHAFT
3	P0568003	HEX NUT M16-1.5
4	P0568004	ECCENTRIC SHAFT
5	P0568005	BUTTON HD CAP SCR M8-1.25 X 16
6	P0568006	LOCK WASHER 10MM
7	P0568007	KNOB SCREW M10-1.5 X 25
8	P0568008	LOCK HANDLE M10-1.5
9	P0568009	KNOB SCREW M10-1.5 X 25
10	P0568010	TRANSLUCENT PIECE
11	P0568011	RIVET 3.2 X 10
12	P0568012	LATCH KNOB 6MM
13	P0568013	CAP SCREW M6-1 X 20
14	P0568014	HEX BOLT M10-1.5 X 50
15	P0568015	HEX NUT M10-1.5
16	P0568016	HEIGHT POINTER
17	P0568017	FLANGE SCREW M5-.8 X 10
18	P0568018	TAP SCREW M4 X 10
19	P0568019	STRAIN RELIEF M20 TYPE-6 ST
20	P0568020	PLATE
21	P0568021	TAP SCREW M4 X 8
22	P0568022	CORD CLAMP 1/2"
23V3	P0568023V3	MOTOR 5HP 220V 1-PH V3.07.13 (G0568)
23V3-1	P0568023V3-1	FAN COVER
23V3-2	P0568023V3-2	FAN
23V3-3	P0568023V3-3	S CAPACITOR 300M 250V 1-3/4 X 3-13/16
23V3-4	P0568023V3-4	R CAPACITOR 45M 450V 2 X 4-3/8
23V3-5	P0568023V3-5	MOTOR JUNCTION BOX
23V3-6	P0568023V3-6	CONTACT PLATE
23V3-7	P0568023V3-7	CENTRIFUGAL SWITCH
23V3-8	P0568023V3-8	BALL BEARING 6206-2RS
23V3-9	P0568023V3-9	BALL BEARING 6204-2RS
23V3-10	P0568023V3-10	S CAPACITOR COVER
23V3-11	P0568023V3-11	R CAPACITOR COVER
23	P0569023	MOTOR 7-1/2HP 220/440V 3-PH (G0569)
23-1	P0569023	FAN COVER
23-2	P0569023	FAN
23-7	P0569023	MOTOR JUNCTION BOX
24	P0568024	BUTTON HD CAP SCR M8-1.25 X 20
25	P0568025	COVER
26	P0568026	HEX BOLT M10-1.5 X 30
27	P0568027	HEX NUT M10-1.5
28	P0568028	CAP SCREW M6-1 X 20
29	P0568029	LATCH KNOB 6MM
30	P0568030	FLAT WASHER 8MM
31	P0568031	CAP SCREW M8-1.25 X 25
32	P0568032	BUSHING
33	P0568033	CAP SCREW M8-1.25 X 25
34	P0568034	CAP SCREW M6-1 X 25
35	P0568035	LOCK WASHER 4MM
36	P0568036	BRAKE PAD
37	P0568037	BUSHING
38	P0568038	BRAKE LEVER
39	P0568039	CAP SCREW M6-1 X 16

REF	PART #	DESCRIPTION
40	P0568040	CAP SCREW M6-1 X 16
41	P0568041	LOCK WASHER 6MM
42	P0568042	BRAKE STEP PLATE
43	P0568043	EXTENSION SPRING 1.6 X 40 X 63
44	P0568044	HEX NUT M6-1
45	P0568045	CAP SCREW M6-1 X 16
46	P0568046	TAP SCREW M4 X 8
47	P0568047	CORD CLAMP 5/8"
48	P0568048	STEP CORD
49	P0568049	HEX BOLT M4-.7 X 30
50	P0568050	LIMIT SWITCH KL7141
51	P0568051	HEX NUT M4-.7
52	P0568052	UPPER WHEEL COVER
53	P0568053	HEX NUT M4-.7
54	P0568054	FLAT WASHER 4MM
56	P0568056	PHLP HD SCR M4-.7 X 10
57	P0568057	PHLP HD SCR M6-1 X 10
58	P0568058	LOWER WHEEL COVER
59	P0568059	SAW BLADE 181 X 1 X .035 HOOK
60	P0568060	UPPER WHEEL SLIDING BRACKET
61	P0568061	COMPRESSION SPRING 1 X 8 X 40
62	P0568062	ROLL PIN 3 X 12
63	P0568063	MOVING PLATE
64	P0568064	TAP SCREW M4 X 10
65	P0568065	FIX PLATE
66	P0568066	TENSION POINTER
67	P0568067	TAP SCREW M4 X 16
68	P0568068	TENSION SCALE
70	P0568070	SWITCH CORD
71	P0568071	SWITCH PLATE
72	P0568072	TAP SCREW M4 X 10
73	P0568073	KEY SWITCH 22
74	P0568074	E-STOP BUTTON 250V 10A
75	P0568075	START SWITCH 22
76	P0568076	CONNECTING CORD
77	P0568077	FLANGE SCREW M5-.8 X 50
78	P0568078	TERMINAL BLOCK
79	P0568079	TERMINAL BLOCK COVER
80	P0568080	POWER CORD
81	P0568081	STRAIN RELIEF M20 TYPE-6 ST
82	P0568082	MAG SWITCH 5HP 220/240V MPE-18 (G0668)
82	P0569082	MAG SWITCH 220V 20A (G0569)
82A	P0569082A	MAG SWITCH 440V 12A (G0569)
83	P0568083	HEX NUT M4-.7
84	P0568084	FLAT WASHER 4MM
85	P0568085	DOOR LATCH SWITCH ASM ADZ-S11
86	P0568086	FLANGE SCREW M4-.7 X 35
87	P0568087	MACHINE BODY
88	P0568088	FLANGE SCREW M5-.8 X 10
89	P0568089	SWITCH CORD
90	P0568090	HOUSING PLATE
91	P0568091	CAP SCREW M8-1.25 X 25
92	P0568092	CAM
93V2	P0568093V2	MOTOR CORD 12G 4W V2.11.11

BUY PARTS ONLINE AT GRIZZLY.COM!
Scan QR code to visit our Parts Store.

Main Parts List (Cont.)

REF	PART #	DESCRIPTION
94	P0568094	LOCK NUT M6-1
95	P0568095	HEX NUT M10-1.5
96	P0568096	FLAT WASHER 10MM
97	P0568097	ADJUST BOLT
98	P0568098	HEX BOLT M8-1.25 X 30
99	P0568099	HEX NUT M8-1.25
100	P0568100	LOCATE PLATE
101	P0568101	FLAT HD SCR M5-.8 X 16
102	P0568102	COMPRESSION SPRING 12 X 4 X 70
103	P0568103	BUSHING
104	P0568104	PRESS BLOCK
105	P0568105	SET SCREW M5-.8 X 5
106	P0568106	THRUST BEARING 51201
107	P0568107	SET SCREW M5-.8 X 5
108	P0568108	TENSION LINE
109	P0568109	HANDWHEEL SHAFT
110	P0568110	HANDWHEEL
111	P0568111	CAP SCREW M6-1 X 25
112	P0568112	SQUARE SHAFT
113	P0568113	FLAT WASHER 8MM
114	P0568114	CAP SCREW M8-1.25 X 25
115	P0568115	UPPER WHEEL HINGE ASSY
116	P0568116	SET SCREW M10-1.5 X 16
117	P0568117	GUIDE BLOCK
118	P0568118	UPPER WHEEL SHAFT
119	P0568119	BALL BEARING 6306-2RS
121	P0568121	BUSHING
122	P0568122	UPPER WHEEL 25"
123	P0568123	FLAT WASHER 8MM
124	P0568124	LOCK WASHER 8MM
125	P0568125	CAP SCREW M8-1.25 X 20
126	P0568126	CAP SCREW M8-1.25 X 20
127	P0568127	LOCK WASHER 8MM
128	P0568128	FLAT WASHER 8MM
129	P0568129	BALL BEARING 6306-2RS
130	P0568130	LOWER WHEEL 25"

REF	PART #	DESCRIPTION
133	P0568133	WHEEL PULLEY
134	P0568134	SET SCREW M8-1.25 X 8
137	P0568137	CAP SCREW M8-1.25 X 20
138	P0568138	PULLEY
139	P0568139	LOWER WHEEL SHAFT
140	P0568140	BUTTON HD CAP SCR M8-1.25 X 20
142	P0568142	V-BELT 17-340
143	P0568143	WHEEL BRUSH
144	P0568144	LOCK NUT M6-1
145	P0568145	FLAT WASHER 6MM
146	P0568146	CAP SCREW M6-1 X 20
147	P0568147	LOCK NUT M6-1
148	P0568148	FLAT WASHER 8MM
149	P0568149	FLAT WASHER 6MM
150	P0568150	CAP SCREW M6-1 X 20
151	P0568151	LOCK NUT M6-1
289	P0568289	CORD CONNECTOR 224-201
290	P0568290	PHLP HD SCR M4-.7 X 20
291	P0568291	FLAT WASHER 8MM
292	P0568292	HEX NUT M8-1.25
293	P0568293	CORD CLAMP 5/16"
294	P0568294	TAP SCREW M4 X 10
295	P0568295	FLAT WASHER 8MM
297	P0568297	FLAT WASHER 8MM
298	P0568298	LOCK WASHER 8MM
300	P0568300	FLANGE SCREW M6-1 X 10
301	P0568301	FLAT WASHER 6MM
302	P0568302	SUPPORT
303	P0568303	CONDUT 1/2" X 43'
304	P0568304	CORD BUSHING
314	P0568314	HEX BOLT M12-1.75 X 100
315	P0568315	LOCK WASHER 12MM
316	P0568316	FLAT WASHER 12MM
317	P0568317	RISER BAR
322	P0568322	PRESS PLATE
323	P0568323	PHLP HD SCR M6-1 X 8

BUY PARTS ONLINE AT GRIZZLY.COM!
Scan QR code to visit our Parts Store.

Table

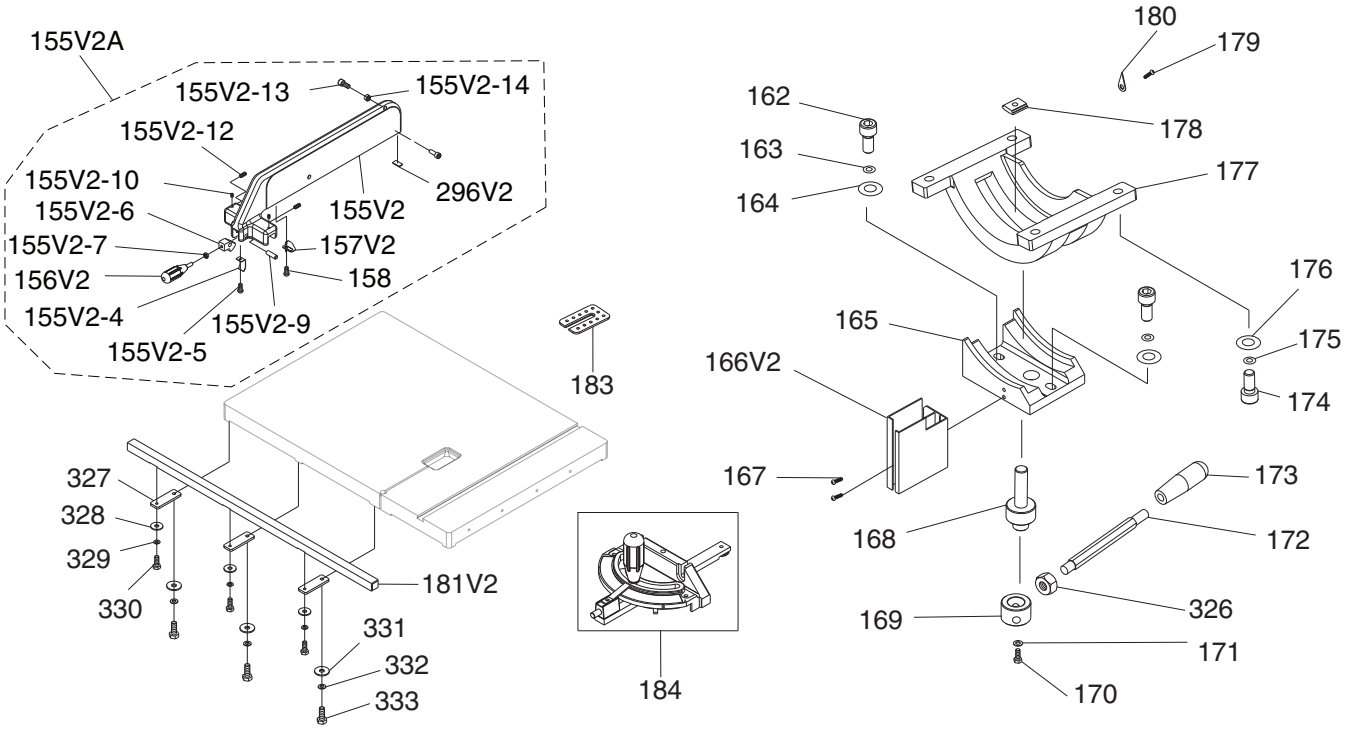

REF	PART #	DESCRIPTION
155V2	P0568155V2	FENCE V2.08.10
155V2-4	P0568155V2-4	SPRING PIECE
155V2-5	P0568155V2-5	FLANGE SCREW M4-.7 X 8
155V2-6	P0568155V2-6	PIVOT BLOCK V2.08.10
155V2-7	P0568155V2-7	HEX NUT M8-1.25
155V2-9	P0568155V2-9	SHAFT V2.08.10
155V2-10	P0568155V2-10	SET SCREW M7-1 X 10 (PLASTIC)
155V2-12	P0568155V2-12	SET SCREW M8-1.25 X 12
155V2-13	P0568155V2-13	HEX BOLT M8-1.25 X 20
155V2-14	P0568155V2-14	HEX NUT M8-1.25
155V2A	P0568155V2A	FENCE ASSEMBLY V2.08.10
156V2	P0568156V2	HANDLE V2.08.10
157V2	P0568157V2	POINTER V2.08.10
158	P0568158	FLANGE SCREW M5-.8 X 8
162	P0568162	CAP SCREW M10-1.5 X 30
163	P0568163	LOCK WASHER 10MM
164	P0568164	FLAT WASHER 10MM
165	P0568165	TRUNNION HOUSING
166V2	P0568166V2	BLADE GUARD V2.06.09
167	P0568167	FLANGE SCREW M6-1 X 10
168	P0568168	PRESS SHAFT
169	P0568169	MICRO ADJUSTING RING
170	P0568170	CAP SCREW M8-1.25 X 20

REF	PART #	DESCRIPTION
171	P0568171	LOCK WASHER 8MM
172	P0568172	HANDLE SHAFT
173	P0568173	HANDLE KNOB M12-1.75 FEMALE
174	P0568174	CAP SCREW M10-1.5 X 35
175	P0568175	LOCK WASHER 10MM
176	P0568176	FLAT WASHER 10MM
177	P0568177	TRUNNION BLOCK
178	P0568178	PRESS BLOCK
179	P0568179	PHLP HD SCR M4-.7 X 10
180	P0568180	POINTER
181V2	P0568181V2	GUARD RAIL V2.08.10
182	P0568182	TABLE
183	P0568183	TABLE INSERT
184	P0568184	MITER GAUGE ASSY
296V2	P0568296V2	NYLON PAD V2.08.10
326	P0568326	HEX NUT M12-1.75
327	P0568327	GUARD RAIL PLATE
328	P0568328	FLAT WASHER 6MM
329	P0568329	LOCK WASHER 6MM
330	P0568330	HEX BOLT M6-1 X 20
331	P0568331	FLAT WASHER 8MM
332	P0568332	LOCK WASHER 8MM
333	P0568333	HEX BOLT M8-1.25 X 20

BUY PARTS ONLINE AT GRIZZLY.COM!
Scan QR code to visit our Parts Store.

Guide Post

Upper Guide Adjustment

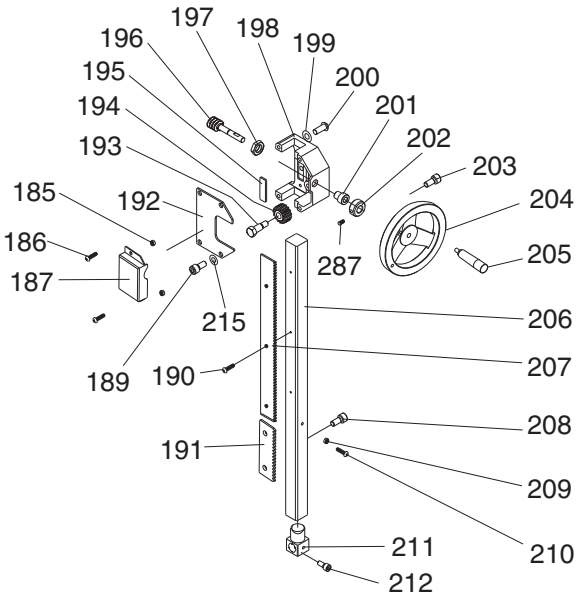

Table Tilt Adjustment

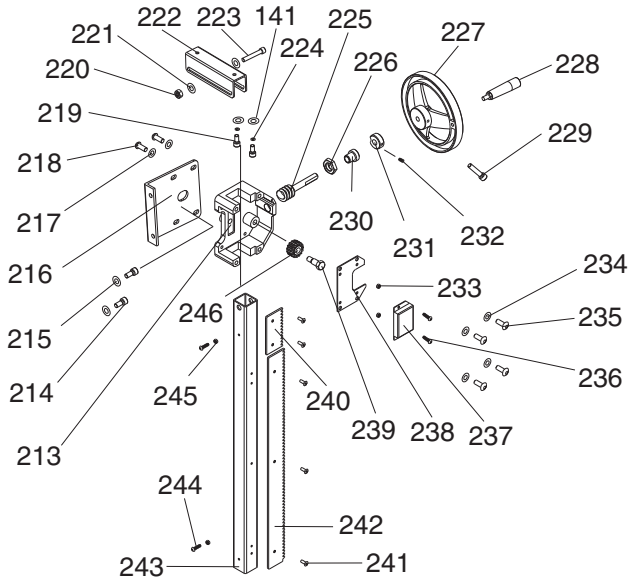

REF	PART #	DESCRIPTION
141	P0568141	FLAT WASHER 6MM
185	P0568185	LOCK WASHER 8MM
186	P0568186	FLANGE SCREW M5-.8 X 10
187	P0568187	COVER
189	P0568189	CAP SCREW M8-1.25 X 16
190	P0568190	FLAT HD SCR M4-.7 X 10
191	P0568191	EXTENSION RACK
192	P0568192	COVER
193	P0568193	FIXED BOLT
194	P0568194	PINION GEAR
195	P0568195	FIXED PLATE
196	P0568196	WORM SHAFT
197	P0568197	HEX NUT M16-1.5 THIN
198	P0568198	GUIDE BRACKET
199	P0568199	FLAT WASHER 8MM
200	P0568200	BUTTON HD CAP SCR M8-1.25 X 35
201	P0568201	BUSHING
202	P0568202	LOCK COLLAR
203	P0568203	CAP SCREW M6-1 X 25
204	P0568204	HANDWHEEL
205	P0568205	HANDLE
206	P0568206	UPPER GUIDE SUPPORT BLOCK
207	P0568207	RACK
208	P0568208	CAP SCREW M6-1 X 16
209	P0568209	HEX NUT M4-.7
210	P0568210	PHLP HD SCR M4-.7 X 10
211	P0568211	UPPER GUIDE SUPPORT BLOCK (ROUND)
212	P0568212	HEX BOLT M6-1 X 16
213	P0568213	GUIDE BRACKET
214	P0568214	CAP SCREW M8-1.25 X 20
215	P0568215	LOCK WASHER 8MM
216	P0568216	SUPPORT PLATE

REF	PART #	DESCRIPTION
217	P0568217	FLAT WASHER 8MM
218	P0568218	BUTTON HD CAP SCR M8-1.25 X 20
219	P0568219	HEX BOLT M6-1 X 10
220	P0568220	LOCK NUT M8-1.25
221	P0568221	LOCK WASHER 8MM
222	P0568222	SLIDING PLATE
223	P0568223	HEX BOLT M8-1.25 X 55
224	P0568224	LOCK WASHER 6MM
225	P0568225	WORM SHAFT
226	P0568226	HEX NUT M16-1.5 THIN
227	P0568227	HANDWHEEL
228	P0568228	PHLP HD SCR M4-.7 X 20
229	P0568229	CAP SCREW M6-1 X 25
230	P0568230	BUSHING
231	P0568231	LOCK COLLAR 22 X 10 X 10MM
232	P0568232	SET SCREW M5-.8 X 5
233	P0568233	HEX NUT M8-1.25
234	P0568234	LOCK WASHER 8MM
235	P0568235	CAP SCREW M8-1.25 X 16
236	P0568236	FLANGE SCREW M5-.8 X 10
237	P0568237	COVER
238	P0568238	COVER
239	P0568239	PINION GEAR BOLT
240	P0568240	STRETCH RACK
241	P0568241	FLAT HD SCR M4-.7 X 10
242	P0568242	RACK
243	P0568243	SQUARE TUBE
244	P0568244	PHLP HD SCR M4-.7 X 10
245	P0568245	HEX NUT M4-.7
246	P0568246	PINION GEAR 15T
287	P0568287	SET SCREW M5-.8 X 5

BUY PARTS ONLINE AT GRIZZLY.COM!
Scan QR code to visit our Parts Store.

Blade Guides

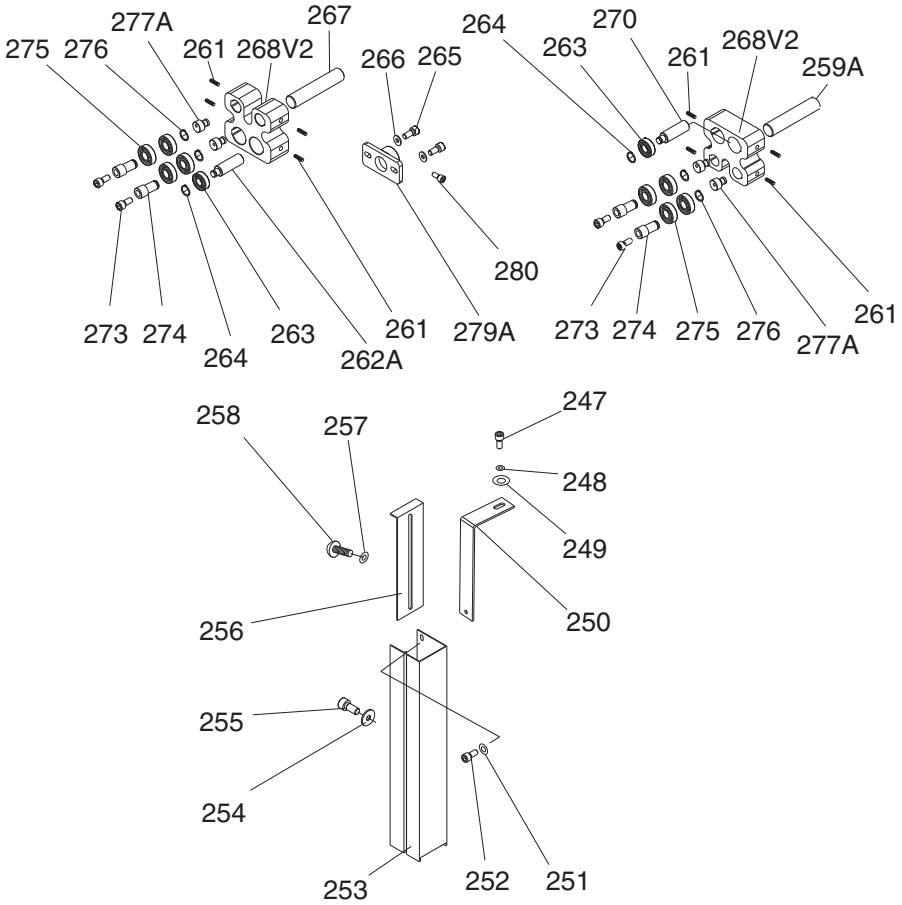

REF	PART #	DESCRIPTION
247	P0568247	CAP SCREW M6-1 X 10
248	P0568248	LOCK WASHER 6MM
249	P0568249	FLAT WASHER 6MM
250	P0568250	SUPPORT PLATE
251	P0568251	FLAT WASHER 6MM
252	P0568252	CAP SCREW M6-1 X 10
253	P0568253	PROTECT COVER
254	P0568254	FLAT WASHER 6MM
255	P0568255	CAP SCREW M6-1 X 10
256	P0568256	SLIDING PLATE
257	P0568257	FLAT WASHER 6MM (PLASTIC)
258	P0568258	PHLP HD SCR M6-1 X 10
259A	P0568259A	ADJUST BAR (ROUND) V2.10.05
261	P0568261	SET SCREW M6-1 X 10
262A	P0568262A	UPPER SPACING SLEEVE V2.12.05

REF	PART #	DESCRIPTION
263	P0568263	BALL BEARING 6201ZZ
264	P0568264	EXT RETAINING RING 12MM
265	P0568265	CAP SCREW M6-1 X 16
266	P0568266	FLAT WASHER 6MM
267	P0568267	ADJUSTING SHAFT
268V2	P0568268V2	BLADE GUIDE SUPPORT (ROUND) V2.12.05
270	P0568270	UPPER SPACING SLEEVE
273	P0568273	HEX BOLT M6-1 X 40
274	P0568274	HANDLE BUSHING
275	P0568275	BALL BEARING 6202ZZ
276	P0568276	EXT RETAINING RING 15MM
277A	P0568277A	ECCENTRIC SHAFT (ROUND) V2.12.05
279A	P0568279A	SUPPORT BRACKET V2.09.06
280	P0568280	HEX BOLT M6-1 X 16

BUY PARTS ONLINE AT GRIZZLY.COM!
Scan QR code to visit our Parts Store.

Label Placement

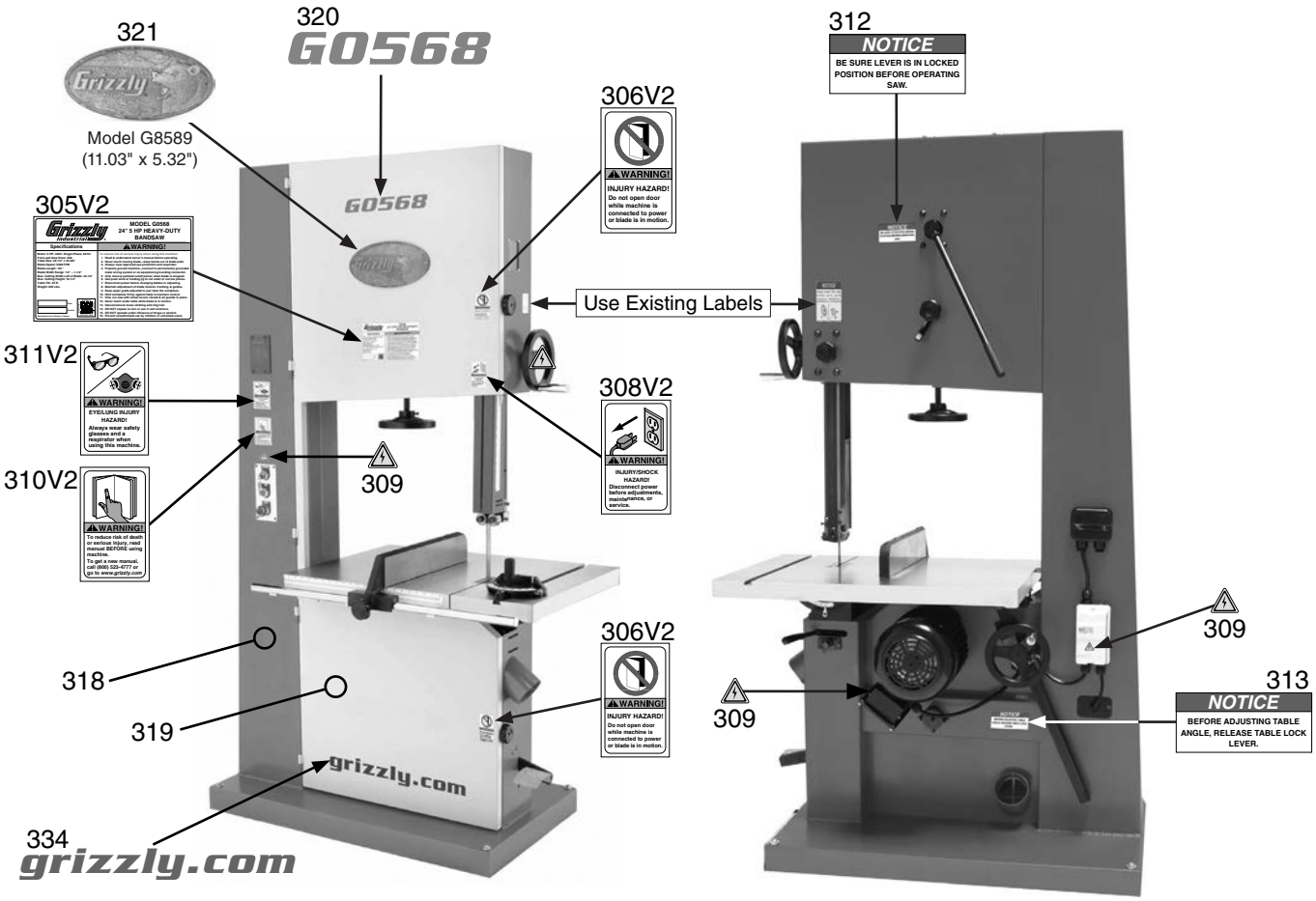

REF	PART #	DESCRIPTION
305V2	P0568305V2	MACHINE ID LABEL (G0568) V2.01.14
305V2	P0569305V2	MACHINE ID LABEL (G0569) V2.01.14
306V2	P0568306V2	KEEP DOOR CLOSED LABEL V2.01.14
308V2	P0568308V2	DISCONNECT POWER LABEL V2.01.14
309	P0568309	ELECTRICITY LABEL
310V2	P0568310V2	READ MANUAL LABEL V2.01.14
311V2	P0568311V2	GLASSES/RESPIRATOR LABEL V2.01.14
312	P0568312	TENSION LEVER LABEL

REF	PART #	DESCRIPTION
313	P0568313	TABLE LOCK LABEL
318	P0568318	TOUCH-UP PAINT, GRIZZLY GREEN
319	P0568319	TOUCH-UP PAINT, GREY
320	P0568320	MODEL NUMBER LABEL (G0568)
320	P0569320	MODEL NUMBER LABEL (G0569)
321	P0568321	GRIZZLY NAMEPLATE–LARGE
334	P0568334	GRIZZLY.COM LABEL

⚠WARNING

Safety labels warn about machine hazards and ways to prevent injury. The owner of this machine MUST maintain the original location and readability of the labels on the machine. If any label is removed or becomes unreadable, REPLACE that label before using the machine again. Contact Grizzly at (800) 523-4777 or www.grizzly.com to order new labels.

BUY PARTS ONLINE AT GRIZZLY.COM!
Scan QR code to visit our Parts Store.

Grizzly Industrial, Inc. WARRANTY CARD

Name _____

Street _____

City _____ State _____ Zip _____

Phone # _____ Email _____

Model # _____ Order # _____ Serial # _____

The following information is given on a voluntary basis. It will be used for marketing purposes to help us develop better products and services. ***Of course, all information is strictly confidential.***

1. How did you learn about us?

____ Advertisement ____ Friend ____ Catalog
____ Card Deck ____ Website ____ Other:

2. Which of the following magazines do you subscribe to?

____ Cabinetmaker & FDM
____ Family Handyman
____ Hand Loader
____ Handy
____ Home Shop Machinist
____ Journal of Light Cont.
____ Live Steam
____ Model Airplane News
____ Old House Journal
____ Popular Mechanics
____ Popular Science
____ Popular Woodworking
____ Precision Shooter
____ Projects in Metal
____ RC Modeler
____ Rifle
____ Shop Notes
____ Shotgun News
____ Today's Homeowner
____ Wood
____ Wooden Boat
____ Woodshop News
____ Woodsmith
____ Woodwork
____ Woodworker West
____ Woodworker's Journal
____ Other:

3. What is your annual household income?

____ $20,000-$29,000 ____ $30,000-$39,000 ____ $40,000-$49,000
____ $50,000-$59,000 ____ $60,000-$69,000 ____ $70,000+

4. What is your age group?

____ 20-29 ____ 30-39 ____ 40-49
____ 50-59 ____ 60-69 ____ 70+

5. How long have you been a woodworker/metalworker?

____ 0-2 Years ____ 2-8 Years ____ 8-20 Years ____ 20+ Years

6. How many of your machines or tools are Grizzly?

____ 0-2 ____ 3-5 ____ 6-9 ____ 10+

7. Do you think your machine represents a good value? _____Yes _____No

8. Would you recommend Grizzly Industrial to a friend? _____Yes _____No

9. Would you allow us to use your name as a reference for Grizzly customers in your area?
Note: *We never use names more than 3 times.* _____Yes _____No

10. Comments: _____

_____

_____

_____

CUT ALONG DOTTED LINE

FOLD ALONG DOTTED LINE

Place
Stamp
Here

GRIZZLY INDUSTRIAL, INC.
P.O. BOX 2069
BELLINGHAM, WA 98227-2069

FOLD ALONG DOTTED LINE

Send a Grizzly Catalog to a friend:

Name_____

Street_____

City_____State_____Zip_____

TAPE ALONG EDGES--PLEASE DO NOT STAPLE

WARRANTY & RETURNS

Grizzly Industrial, Inc. warrants every product it sells for a period of **1 year** to the original purchaser from the date of purchase. This warranty does not apply to defects due directly or indirectly to misuse, abuse, negligence, accidents, repairs or alterations or lack of maintenance. This is Grizzly's sole written warranty and any and all warranties that may be implied by law, including any merchantability or fitness, for any particular purpose, are hereby limited to the duration of this written warranty. We do not warrant or represent that the merchandise complies with the provisions of any law or acts unless the manufacturer so warrants. In no event shall Grizzly's liability under this warranty exceed the purchase price paid for the product and any legal actions brought against Grizzly shall be tried in the State of Washington, County of Whatcom.

We shall in no event be liable for death, injuries to persons or property or for incidental, contingent, special, or consequential damages arising from the use of our products.

To take advantage of this warranty, contact us by mail or phone and give us all the details. We will then issue you a "Return Number,'' which must be clearly posted on the outside as well as the inside of the carton. We will not accept any item back without this number. Proof of purchase must accompany the merchandise.

The manufacturers reserve the right to change specifications at any time because they constantly strive to achieve better quality equipment. We make every effort to ensure that our products meet high quality and durability standards and we hope you never need to use this warranty.

Please feel free to write or call us if you have any questions about the machine or the manual.

Thank you again for your business and continued support. We hope to serve you again soon.

grizzly.com®
TOOL WEBSITE

Buy Direct and Save with Grizzly® – Trusted, Proven and a Great Value!

~Since 1983~

Visit Our Website Today For Current Specials!

ORDER

24 HOURS A DAY!

1-800-523-4777

VISA MasterCard DISCOVER NOVUS AMERICAN EXPRESS