VEVOR

Upgrade · The Home Creator Way

Countertop Blenders

MODEL:HS-608C

VEVOR Support Center

1	HS-608C (WHITE) (US)		2	HS-608C (WHITE) (EU)	
3	HS-608C (WHITE) (AU)		4	HS-608C (BLACK) (US)	
5	HS-608C (BLACK) (EU)		6	HS-608C (BLACK) (AU)	

VEVOR
Upgrade·The Home Creator Way

Countertop Blenders

MODEL:HS-608C

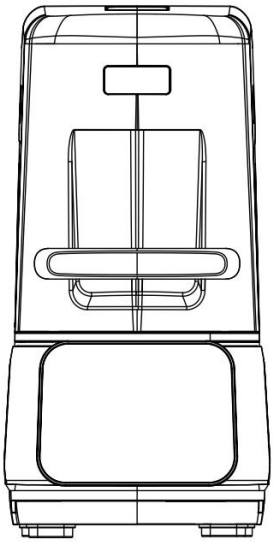

This is the original instruction, please read all manual instructions carefully before operating. VEVOR reserves a clear interpretation of our user manual. The appearance of the product shall be subject to the product you received. Please forgive us that we won't inform you again if there are any technology or software updates on our product.

	Warning-To reduce the risk of injury, user must read instructions manual carefully.
	Indoor Use Only



CORRECT DISPOSAL

This product is subject to the provision of European Directive 2012/19/EC. The symbol showing a wheelie bin crossed through indicates that the product requires separate refuse collection in the European Union. This applies to the product and all accessories marked with this symbol. Products marked as such may not be discarded with normal domestic waste, but must be taken to a collection point for recycling electrical and electronic devices

FCC Information:

CAUTION: Changes or modifications not expressly approved by the party responsible for compliance could void the user's authority to operate the equipment!

This device complies with Part 15 of the FCC Rules. Operation is subject to the following two conditions:

1) This product may cause harmful interference.

2)This product must accept any interference received, including interference that may cause undesired operation.

WARNING: Changes or modifications to this product not expressly approved by the party.responsible for compliance could void the user's authority to operate the product.

Note: This product has been tested and found to comply with the limits for a Class B digital device pursuant to Part 15 of the FCC Rules, These limits are designed to provide reasonable protection against harmful interference in a residential installation.

This product generates, uses and can radiate radio frequency energy, and if not installed and used in accordance with the instructions, may cause harmful interference to radio communications. However, there is no guarantee that interference will not occur in a particular installation. If this product does cause harmful interference to radio or television

	reception,which can be determined by turning the product off and on, the user is encouraged to try to correct the interference by one or more of the following measures. · Reorient or relocate the receiving antenna. · Increase the distance between the product and receiver. · Connect the product to an outlet on a circuit different from that to which the receiver is connected. · Consult the dealer or an experienced radio/TV technician for assistance.

Introduction

Thank you for choosing our High Speed Blender.
All the staff of our company will serve you wholeheartedly.
In order to use this machine correctly and effectively, please readthis manual carefully before using.

Major Component Name

Pictures are for reference only,please referto the material object!

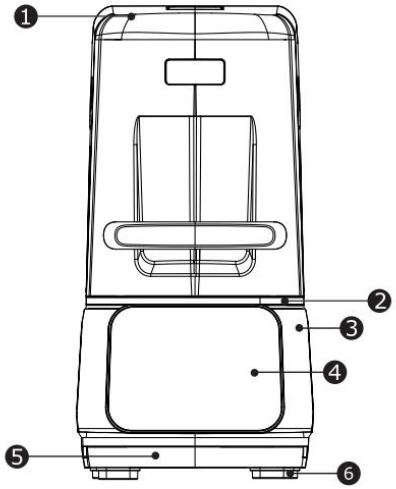

1.Soundproof Cover
2.Jar mat
3.Base Housing
4.Touch screen control
5.Base bottom
6. Rubber feet

The apparatus is intended to be used for domestic and similar applications as than:
kitchen employees in shops,offices and other workenvironments;
Farms;
By clients of hotels,motels and other residential-typeenvironments;
Bed and Breakfast type environments.

Points for Attention

WARNING:

1. Warning-To reduce the risk of injury, user must read instructions manual carefully.
2. The product complies with relevant standards and regulations. Installation of this device must comply with all applicable regulations, and it should only be operated in well-ventilated areas. Please read the user manual before installing and using this equipment.
3. This product is not intended for use by persons (including children) with reduced physical, sensory or mental capabilities, or lack of experience and knowledge, unless they have been given supervision or instruction concerning use of the appliance by a person responsible for their safety.
4. Children shall not play with the appliance.
5. This product shall not be used by children. Keep the appliance and its cord out of reach of children.
6. This product is intended to be used in household and similar applications
7. Please properly keep product. Check whether the product is abnormal before use. If it is abnormal, please stop using it.
8. Please use the product according to the intended use, warn of potential injury from misuse.
9. If the supply cord is damaged, it must be replaced by the manufacturer, its service agent or similarly qualified persons in order to avoid a hazard.

Note:

◆Do not put metal objects such as knives,forks,spoons, etc.into the cup.

◆When cleaning,do not clean the knife directly by hand.If you use cleaning tools,please pay attention to safety.

◆ The contents of the cup should not be too full.Do not exceed two thirds of the capacity of the cup.

Please dose the lid of the cup when using.

◆ Before starting,make sure the cup is on the base. It is completely fixed on.

◆Because of the high horsepower,please hold the cup slightly when you start to use it.

◆Be sure to cover the cup when using the stirring bar while the motor is running.

◆Whether the cup is placed on the table or not.

Do not use your hand to fetch food from that cup because the blade is sharp and easy to cut.

◆To pour food out,remove the cup from the frame.

◆Be careful to touch the switch before and after start-up.

◆Utensils cannot be immersed in water.



Care should be taken when handling cutting blades especially when removing blades from containment cups,emptying containment cups,and during cleaning.

◆Remember to pull off the plug when not in use.

◆Do not lift the lid of the cup until the stirring knife has completely stopped rotating.

◆Be sure to separate the frame from the cup when cleaning and make sure to pull off the plug first.

◆Do not immerse the motor base in water or put it in the dishwasher for cleaning.

◆Keep a proper distance to prevent the child from improper movement and causing danger when the child is not allowed to be nearby during the start-up.

◆If the power cord is damaged,it must be replaced by a professional in the manufacturer's maintenance department or similar department in order to avoid danger.

Cleaning and Maintenance Methods

◆Always pull off the plug when cleaning and maintaining.
◆Carefully scrub the cup body and lid with a sponge or cloth and dry.
◆Do not put your hand into the cup for cleaning.
◆Wipe the rotating shaft and motor base with a dry cloth (remember!Do not rinse with water).
◆When it is not easy to wipe,wipe it with neutral lotion, and then wipe it with dry cloth until it is dlean.

Function Introduction

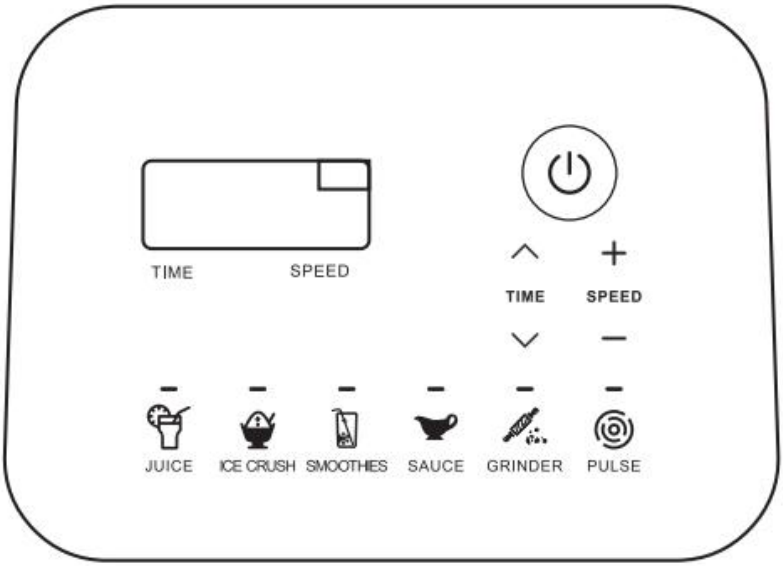

◆LED Display

◆ The system powers on,the buzzer emits a single sound,
and the entire screen(digtal tube and all indicator lights) is statically

illuminated for 2 seconds;then the 6 indicator lights are semi-lit(the color screen icons can be seen),and the 4-digt display shows "0000",indicating that the system is in standby mode.

◆ **Start/Cancel Button**

◆When in standby mode,select the desired working mode, and the corresponding indicator light will flash.Click the"On/Off Key",and the indicator light will remain on.The system will then enter this working mode and start working according to the corresponding program;if within 5 seconds,the "Start/Cancel Key"is not clicked,the indicator light will go off,and the system willautomatically return to the standby state.

◆When starting any working mode from the power on,click the "On/Off Key",and the buzzer willemit a single sound. The system willimmediately stop the current operation and exit the current working mode,returning to the standby state.

◆When starting the juice (JUICE), smoothie (ICE CRUSH),milkshake (SMOOTHIES), sauce(SAUCE), or grinder(GRINDER) working modes, no other keys can be pressedto change the working mode. For example, the "Time" and"Gear"keys cannot be used. Only the "On/Off Key" can beused to cancel the working mode and return to the standby state.

◆ **JUICE**

◆When the system is in standby mode, press the "Juice"button. The corresponding indicator light will flash. Thenclick the "On/Off Key"once. The indicator light will remainon and the system will start working.

◆Start working. The digital display shows a 30-second countdown. The motor operates at speed 1 for 3 seconds,then switches to speed 5 for 25 seconds, then switches to speed 2 for 2 seconds before ending.

◆ **ICE CRUSH**

◆When the system is in standby mode, press the "Ice"button. The

corresponding indicator light will flash and the buzzer will sound once. Then, click the "On/Off KeyKnob". The indicator light will remain on and the system will start working.

◆Start working.The digital display shows 40 seconds countdown.Motor starts in 1st gear for 1 second,then directly operates in 9th gear for 3 seconds,and the motor stops for 2 seconds(only after the motor has completely stopped can the next cycle of work begin).This cycle is repeated continuously for 7 cycles before ending.

◆  SMOOTHIES

◆ When the system is in standby mode, press the "Smoothie" button. The corresponding indicator light will flash and the buzzer will sound once. Then, click the "On/Off Key Knob".The indicator light will remain on and the system will start working.

◆ Start working. The digital display shows a countdown of 45 seconds. The motor operates at speed 1 for 2 seconds,then switches to speed 5 for 6 seconds, then to speed 9 for 12 seconds, and this cycle repeats by switching backto speed 1 for 2 seconds, then to speed '5 for 6 seconds,and to speed 9 until the end.

◆  Sauce

◆When the system is in standby mode, press the sauce button. The corresponding indicator light will flash and thebuzzer will sound once. Then, click the "On/Off key knob".The indicator light will remain on and the system will startworking.

◆Start working. The digital display shows 20 seconds countdown. The motor operates at speed 1 for 5 seconds,then switches to speed 5 for 10 seconds, then switches tospeed 3 for 5 seconds and finally stops.



◆ **GRINDER**

◆ When the system is in standby mode, press the grinding button. The corresponding indicator light will flash and the buzzer will sound once. Then click the "On/Off key" again.The indicator light will remain on and the system will start working.

◆ Start working. The digital display shows 040. The countdown begins. (The motor operates at 3rd gear for 5seconds, then switches to 9th gear for 15 seconds. This cycle repeats continuously for 2 times before the operation ends.)



◆ **PuLse**

◆ In the standby mode, press and hold the "PULSE" key for 2 seconds, and the motor will start working immediately.The 3-digit display shows the working time. The motor will first operate at 1 gear for 3 seconds, then switch to 9 gear.When the speed reaches 9 gear, it will continue to operat eat this speed. At any time during this period, if you release the key, the motor will immediately stop working.

◆ [Note: Each long press is limited to 30 seconds. After 30 seconds, it will automatically exit the working mode. You need to press the key again to enter the working mode.] When selecting the corresponding function, the 4-digitdisplay screen will show the corresponding time and gear.

◆**Time**

◆ Working process: When the icon key is touched for thefirst time, the default duration is 30 seconds. By pressing "+"or"-" to select the time, the duration can be increased or decreased by 10-90S After the 90S cycle,click the "U)"button again. When touch the Speed button by pressing "+"or "-"to select the speed, the durantion can be increased or decreased by 1-9 levels.

Important Guide

Automatic Overload Protection:
Your blender motor is designed to protect itself from overheating.
If the motor shuts off, follow these instructions:



OVERHEAT PROTECTION RESET BUTTON

◆Reduce the quantity of the ingredients in your container.
◆Press the overheat protection reset button under themotor base.
◆Turn off the the machine for up to 20 minutes to reset.
◆Reset time will be extended if high room temperatures exist.
◆To reduce the reset time, unplug the machine, remove the jug and blow air into the center section of the bottom with a fan or hair dryer on the cool setting.
◆Blend on higher speed to avoid overheating.
◆Blending on a low or medium speed can cause overheating.

Warranty

Claim according to current law.
Cash receipt with purchase date shall be enclosed with anyclaims.
When raising a claim the appliance must be returned to thestore of purchase.

Fault Analysis

Status	Cause	Solution

Not working	◆The powe is unplugged ◆ The protection device of themotor is disconnected	◆ Plug the plug into the socket with the correct voltage ◆ Put the main engine in ventilation places to cool for about 20 minutes
Over shaking	◆The main engine is imbalanced ◆ The conditioning cup is not completely.put into the main engine ◆ Over amount of ingredients	◆ Put the main engine in fat place ◆ Put the conditioning cup completely into the main engine ◆ Adjust the amount of ingredents
Water spilling from the lid	◆ The water exceeds the maximum ◆ The lid is not correctly covered	◆ Adjust the amount of water ◆Make sure the lid is correctly covered

Note:
Above are common trouble analysis and troubleshooting methods.For other troubles, please contact our customer service department, or go directly to our designated repair point for repair.
Do not dismantle and repair yourself.

Safety Instrutions

When the product will not be used for a long period of time,or if you are leaving for an extended absence, please unplug the power cord.
Even in standby mode, some parts remain energized, and insulation deterioration or electrical leakage may cause fire.
• Do not spray volatile oils, paints, or insecticides on the product.
Doing so may cause electric shock or fire.
Always unplug the power cord when the product is not in use for a long

time or when you are away.
Some parts remain energized in standby mode and may causefire due to insulation cracks or leakage.
• Do not pull the power cord when unplugging.
Always hold and pull the plug directly.
Ensure the power cord is plugged in securely before use.The plug must fit tightly into the socket with no looseness or incomplete insertion.
• Do not step on the power cord.
Damaging the power cord or socket can lead to electric shock, burns, or leakage.
If the power cord is damaged, it must be replaced by the manufacturer, a service agent, or a qualified technician to avoid danger.

Switch off the power when you are away or before going to sleep.
This reduces the risk of fire caused by wiring faults and helps save electricity.
• Do not expose the product to combustible substances or areas where mechanical oil vapors are present.
This can cause cracks, odors, or fire accidents.
• Do not use the product in damp areas such as bathrooms.
Moisture can cause poor insulation, leakage, or malfunction.
• Do not use damaged power cords or plugs.
This may result in electric shock, short circuit, or fire.
• Do not use multiple extension sockets or share outlets with other appliances.
Overloading may cause overheating or fire hazards.
• Do not unplug the power cord with wet hands.
Doing so may result in electric shock.

Safety Instrutions

To ensure safe use and avoid injury and property damage caused to you and others please do comply with the following safety precautions.

Any incorrect use due to non-compliance might lead to accidents

The following situations haven't been taken into consideration:

..... Use by un-attended children and the disabled

..... Children playing with the product

Meaning of the signs in the instructions:



Manufacturer: ZHONGSHAN CITY HAISHANG ELECTRIC APPLIANCE CO., LTD

Address: 401 Room, Building 1, No.18 Mincheng east Road, Jidong second community, Xiaolan Town, ZHONGSHAN CITY Guangdong Province, CHINA

E-mail: support@vevor.com

