Installation Instructions

Dryer

If you have any questions, call GE Appliances at 800.GE.CARES (800.432.2737) or visit our Website at: GEAppliances.com
In Canada, call 800.561.3344 or visit www.GEAppliances.ca

BEFORE YOU BEGIN

Read these instructions completely and carefully.

- **IMPORTANT** – Save these instructions for local electrical inspector's use.
- **IMPORTANT** – Observe all governing codes and ordinances.
- Install the clothes dryer according to the manufacturer's instructions and local codes.
- **Note to Installer –** Be sure to leave these instructions with the Consumer.
- **Note to Consumer –** Keep these instructions for future reference.
- Clothes dryer installation must be performed by a qualified installer.
- This dryer must be exhausted to the outdoors.
- Before the old dryer is removed from service or discarded, remove the dryer door.
- Service information and the wiring diagram are located in the control console.
- Do not allow children on or in the appliance. Close supervision of children is necessary when the appliance is used near children.
- Proper installation is the responsibility of the installer.
- Product failure due to improper installation is not covered under the Warranty.
- Install the dryer where the temperature is above 50°F for satisfactory operation of the dryer control system.
- Remove and discard existing plastic or metal foil duct and replace with UL-listed duct.

If you are planning to stack the washer and dryer, order Stacking Kit number **GFA28KITN** to be used for this dryer. Kit sold separately.

⚠ WARNING

- Risk of Fire

- Clothes dryer installation must be performed by a qualified installer.
- Install the clothes dryer according to these instructions and local codes.
- **DO NOT** install a clothes dryer with flexible plastic venting materials. If flexible metal (semi-rigid or foil-type) duct is installed, it must be UL-listed and installed in accordance with the instructions found in "Connecting the Dryer to House Vent" later in this manual. Flexible venting materials are known to collapse, be easily crushed and trap lint. These conditions will obstruct dryer airflow and increase the risk of fire.
- **DO NOT** install or store this appliance in any location where it could be exposed to water or weather.
- To reduce the risk of severe injury or death, follow all installation instructions.
- Save these instructions. (Installers: Be sure to leave these instructions with the customer.)

FOR GAS DRYERS ONLY

In the Commonwealth of Massachusetts, the following installation instructions apply:

- Installation must be performed by a qualified or licensed contractor, plumber, or gasfitter qualified or licensed by the State.
- If using a ball valve, it shall be a T-handle type.
- A flexible gas connector, when used, must not exceed 4 feet.

Installation Instructions

UNPACKING YOUR DRYER

Tilt the dryer sideways and remove the foam shipping pads by pulling at the sides and breaking them away from the dryer legs. Be sure to remove all of the foam pieces around the legs.

Remove the bag containing the literature.

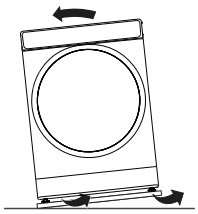

DRYER DIMENSIONS

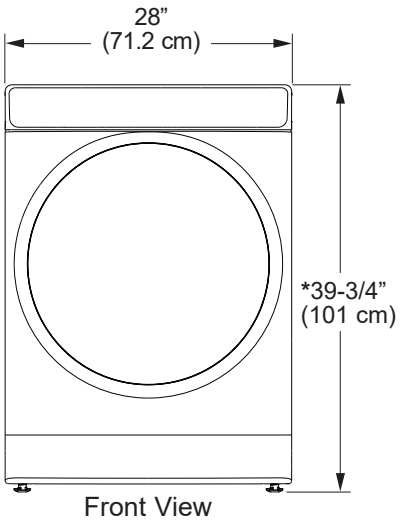

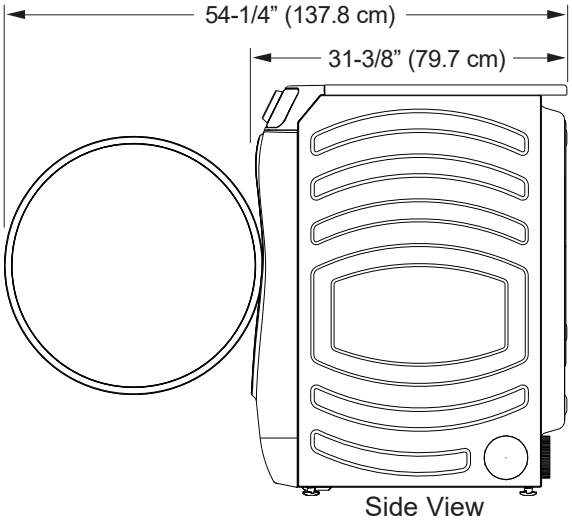

***NOTE:**
With leveling legs retracted: 39-3/4 (101 cm).
With leveling legs fully extended: 40-5/8 (103.1 cm).
With Optional Pedestal: 55-1/2” (141 cm) Min. - 56-5/8” (143.8 cm) Max.
Stacked: 79-1/8” (201 cm).

STEAM WATER HOSES (for steam dryer models only):

GE Appliances strongly recommends the use of factory specified parts. These hoses are manufactured and tested to meet GE Appliances specifications.

GE Appliances strongly recommends the use of new water supply hoses. Hoses degrade over time and need to be replaced every 5 years to reduce the risk of hose failures and water damage.

Parts and Accessories
Order on-line at **GEApplianceparts.com**, 24 hours a day or by phone at **877.959.8688** during normal business hours.

Part Number	Accessory
WE25X20060	Complete Kit (hoses, Y-adapter, washers) **or**
WE49X25794	Kit (Short hose, Y-adapter, washers) **and**
WE1M847	Long Hose
OR SEPARATELY	
WE1M847	Long Hose **and**
WE1M848	Short Hose

ACCESSORIES:

Order on-line at **GEApplianceparts.com**, 24 hours a day or by phone at **877.959.8688** during normal business hours.

Part Number	Accessory
GFP1528SNWW	White Pedestal
GFP1528PNSN	Satin Nickel Pedestal
GFP1528PNRS	Royal Sapphire Pedestal
GFP1528PNDG	Diamond Gray Pedestal
GFA28KITN	Stacking Kit for Dryer over Washer
PM08X10085	Flexible Metal Dryer Transition Duct
WE02X29449	Clothes Dryer Drying Rack

REQUIREMENTS FOR ALCOVE OR CLOSET INSTALLATION

⚠WARNING - Explosion Hazard

Keep flammable materials and vapors, such as gasoline, away from dryer.

Place dryer at least 18” (46 cm) above the floor for a garage installation.

Failure to do so can result in death, explosion, or fire.

- The dryer MUST be vented to the outdoors.
- Minimum clearance between dryer cabinet and adjacent walls or other surfaces is:

  0” either side*
  0” front
  0” rear
  0” top

  *For improved performance, a 1/2” clearance is suggested on each side.
- The rear of the dryer should face a wall.
- Consideration must be given to provide adequate clearance for installation and service.
- Closet doors must be louvered or otherwise ventilated and have at least 60 square inches of open area. If the closet contains both a washer and a dryer, doors must contain a minimum of 120 square inches of open area.

NOTE: WHEN THE EXHAUST DUCT IS LOCATED AT THE REAR OF THE DRYER, THE CONFIGURATION OF THE DUCTING MAY REQUIRE GREATER CLEARANCE.

Gas Dryers Only:

- No other fuel burning appliance shall be installed in the same closet as a gas dryer.
- The dryer must be disconnected from the gas supply piping during pressure testing at pressures greater than 1/2 psi (3.5 kPa).
- A 1/8 inch NPT minimum plugged tapping, accessible for test gauge connection, must be installed immediately upstream of the gas supply connection to the dryer.

MINIMUM CLEARANCE OTHER THAN ALCOVE OR CLOSET INSTALLATION

Minimum clearance to combustible surfaces and for air opening are: 0” both sides*, 0” rear and 0” top.

*For improved performance, a 1/2” clearance is suggested on each side.

The rear of the dryer should face a wall.

Consideration must be given to provide adequate clearance for installation and service.

MOBILE OR MANUFACTURED HOME INSTALLATION

- Installation MUST conform to the MANUFACTURED HOME CONSTRUCTION AND SAFETY STANDARD, TITLE 24, PART 3280 or STANDARD FOR MOBILE HOMES CAN/CSA-Z240 MH, or, when such standards are not applicable, with AMERICAN NATIONAL STANDARD FOR MOBILE HOME, ANSI/NFPA NO. 501B.
- The dryer MUST be vented to the outdoors.
- The exhaust vent MUST be securely fastened to a non-combustible portion of the mobile home.
- The vent MUST NOT be terminated beneath a mobile or manufactured home.
- The vent duct material MUST BE METAL.
- KIT 14-D346-33 MUST be used to attach the dryer securely to the structure.
- The vent MUST NOT be connected to any other duct, vent or chimney.
- **DO NOT** use sheet metal screws or other fastening devices which extend into the interior of the exhaust vent.
- Provide an opening with a free area of at least 25 square inches for introduction of outside air into the dryer room.
- See the sections for electrical connection information.

CONNECTING INLET HOSES (for steam dryer models only)

CONNECTING INLET HOSES

To produce steam, the dryer must connect to the cold water supply. Since the washer must also connect to the cold water, a “Y” connector is inserted to allow both inlet hoses to make that connection at the same time.

NOTE: Use new inlet hoses; never use old hoses.

1. Turn the cold water faucet off. Remove the washer inlet hose from the washer fill valve connector (cold).
2. Ensure the rubber flat washer is in place and attach one female coupling of the short hose provided onto the washer fill valve connector. Tighten by hand until firmly seated.
3. Attach one male end of the “Y” connector to the other female coupling of the short hose. Ensure the rubber flat washer is in place. Tighten by hand until firmly seated.

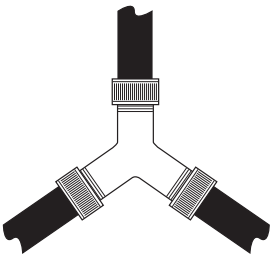

4. Insert the filter screen in the coupling of the **washer’s** inlet hose. If a rubber flat washer is already in place remove it before installing the filter screen. Attach this coupling to one male end of the ‘‘Y’’ connector. Tighten by hand until firmly seated.
5. Ensure the rubber flat washer is in place and attach a 4 ft. to 6 ft. long water inlet hose (may need to be purchased separately) to one male end of the ‘‘Y’’ connector. Tighten by hand until firmly seated.
6. Ensure the rubber flat washer is in place and attach the other end of the **dryer’s** long inlet hose to the fill valve connector at the bottom of the dryer back panel. Tighten by hand until firmly seated.

CONNECTING INLET HOSES (cont.)

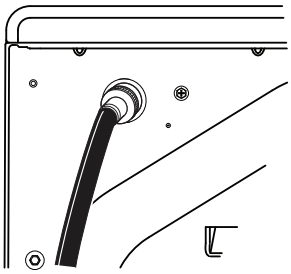

7. Using pliers, tighten all the couplings with an additional two–thirds turn.

NOTE: Do not overtighten. Damage to the couplings may result.

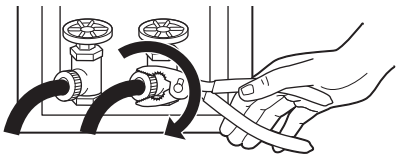

8. Turn the water faucet on.
9. Check for leaks around the ‘‘Y’’ connector, faucet and hose couplings.

WATER SUPPLY REQUIREMENTS

Hot and cold water faucets MUST be installed within 42 in. (107 cm) of your washer’s water inlet. The faucets MUST be 3/4 in. (1.9 cm) garden hose-type so inlet hoses can be connected. Water pressure MUST be between 10 and 120 pounds per square inch. Your water department can advise you of your water pressure.

NOTE: A water softener is recommended to reduce buildup of scale inside the steam generator if the home water supply is very hard.

CONNECTING A GAS DRYER (skip for electric dryers)

TOOLS YOU WILL NEED

- ☐ 10” Adjustable wrenches (2)

- ☐ 8” Pipe wrench

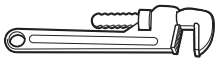

- ☐ Flat-blade screwdriver

- ☐ Slip-joint pliers

- ☐ Level

MATERIALS YOU WILL NEED

- ☐ 4” dia. metal elbow

- ☐ Pipe compound or PTFE tape

- ☐ Flexible gas line connector

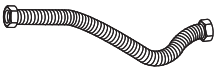

- ☐ Duct clamps (2) or Spring clamps (2)

- ☐ Safety glasses

- ☐ 4” dia. metal duct (recommended)

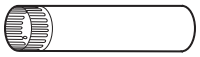

- ☐ 4” dia., UL-listed flexible metal duct (if needed)

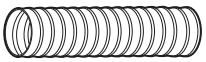

- ☐ Gloves

- ☐ Soap solution for leak detection

- ☐ Exhaust hood

- ☐ Duct tape

- ☐ Gas pipe adapters (2), elbow and pipe plug

- ☐ Access Panel (Kit WE16X29317) (if needed)

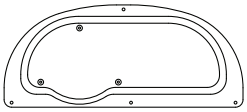

- Before beginning the installation, turn off the circuit breaker(s) or remove the dryer’s circuit fuse(s) at the electrical box. Be sure the dryer cord is unplugged from the wall.

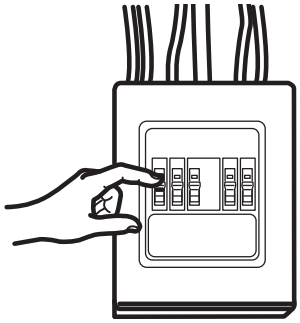

- Turn the dryer’s gas shut-off valve in the supply line to the OFF position.

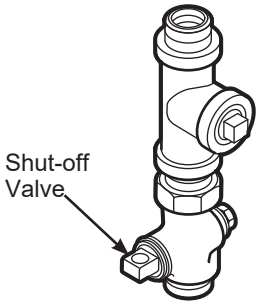

- Disconnect and discard old flexible gas connector and ducting material.

CONNECTING A GAS DRYER (cont.)

GAS REQUIREMENTS

⚠WARNING - Explosion Hazard

- Use a new CSA International approved flexible gas supply line. Never reuse old flexible connectors.
- Install an individual manual shut-off valve within 6ft. of the dryer in accordance with the National Fuel Gas Code, ANSI Z223.1/NFPA 54.
- Securely tighten all gas connections.
- If connected to LP gas, have a qualified person make sure gas pressure **DOES NOT** exceed 13” water column.
- Examples of a qualified person include: licensed heating personnel, authorized gas company personnel, and authorized service personnel.
- Failure to do so can result in death, explosion, or fire.

- The installation must conform with local codes, or in the absence of local codes, with the National Fuel Gas Code, ANSI Z223.1/ NFPA 54, or the Natural Gas and Propane Installation Code, CSA B149.1.

GAS SUPPLY

- A 1/8” National Pipe Taper thread plugged tapping, accessible for test gauge connection, must be installed immediately upstream of the gas supply connection to the dryer. Contact your local gas utility should you have questions on the installation of the plugged tapping.
- Supply line is to be 1/2” rigid pipe and equipped with an accessible shutoff within 6 feet of, and in the same room with, the dryer.
- Use pipe thread compound appropriate for natural or LP gas or use PTFE tape.
- Connect flexible metal connector to dryer and gas supply.

⚠WARNING - Fire Hazard

FOR USE WITH NATURAL GAS ONLY

Dryer as produced by manufacturer is to be used only with a natural gas supply. A manufacturer-supplied conversion kit is required to convert this dryer for propane gas supply. Use propane gas conversion kit WE25M87. Conversion must be made by properly trained and qualified personnel in accordance with local codes and ordinances.

DRYER GAS SUPPLY CONNECTION

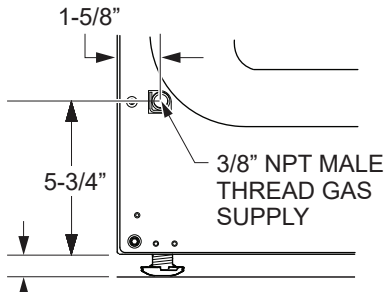

NOTE: Add to vertical dimension the distance between cabinet bottom to floor.

You must use with this dryer a flexible metal connector (listed connector ANSI Z21.24 / CSA 6.10). The length of the connect shall not exceed 4 ft.

ADJUSTING FOR ELEVATION

- Gas clothes dryers input ratings are based on sea level operation and need not be adjusted for operation at or below 2000 ft. elevation. For operation at elevations above 2000 ft., input ratings should be reduced at a rate of 4 percent for each 1000 ft. above sea level.
- Installation must conform to local codes and ordinances or, in their absence, the NATIONAL FUEL GAS CODE, ANSI Z223.

CONNECTING A GAS DRYER (cont.)

CONNECTING THE DRYER TO THE GAS SUPPLY

A Install a female 3/8” NPT elbow at the end of the dryer gas inlet.

Install a 3/8” flare union adapter to the female elbow.

IMPORTANT: Use a pipe wrench to securely hold on to the end of the dryer gas inlet to prevent twisting the inlet.

NOTE: Apply pipe compound or PTFE tape to the threads of the adapter and dryer gas inlet.

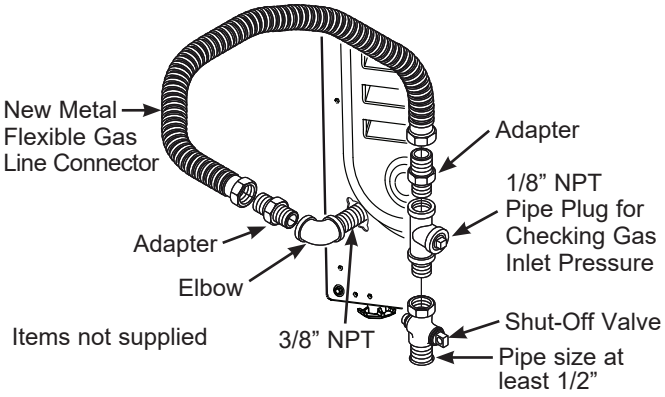

B Attach the flexible metal gas line connector to the adapter.

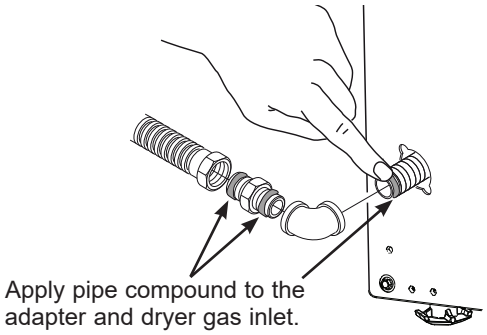

C Tighten the flexible gas line connection, using two adjustable wrenches.

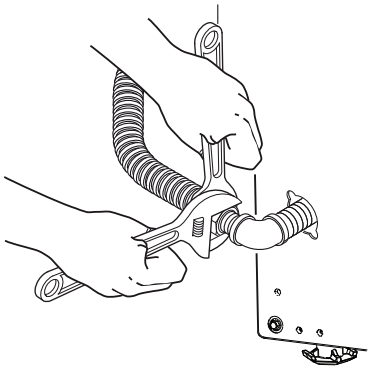

CONNECTING THE DRYER TO THE GAS SUPPLY (cont.)

D Install a 1/8” NPT plugged tapping to the dryer gas line shut-off valve for checking gas inlet pressure.

Install a flare union adapter to the plugged tapping.

NOTE: Apply pipe compound or PTFE tape to the threads of the adapter and plugged tapping.

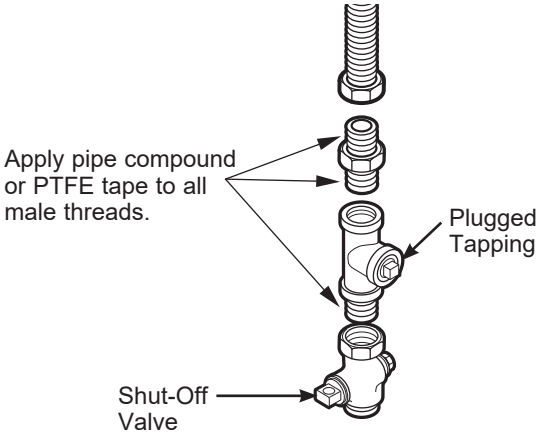

E Tighten all connections, using two adjustable wrenches. **Do not overtighten.**

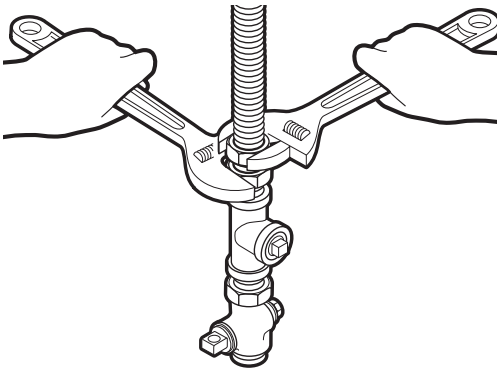

F Open the gas shut-off valve.

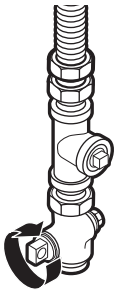

CONNECTING A GAS DRYER (cont.)

TEST FOR LEAKS

Never use an open flame to test for gas leaks.

Check all connections for leaks with soapy solution or equivalent.

Apply a soap solution. The leak test solution must not contain ammonia, which could cause damage to the brass fittings.

If leaks are found, close the valve, retighten the joint and repeat the soap test.

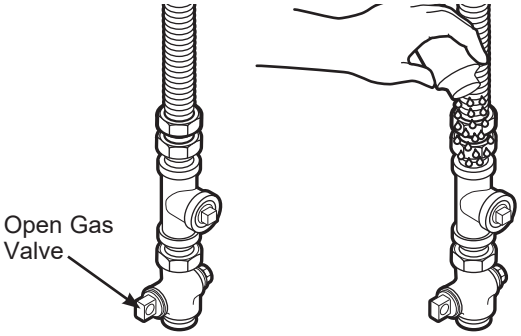

ELECTRICAL CONNECTION INFORMATION FOR GAS DRYERS

⚠WARNING - Electrical Shock Hazard

Plug into a grounded 3 prong outlet.

DO NOT remove ground prong.

DO NOT use an adapter.

DO NOT use an extension cord.

Failure to do so can result in death, fire or electrical shock.

- Circuit – Individual properly polarized and grounded 15 or 20 amp circuit breaker or time-delay fuse.
- Power Supply – 2-wire plus ground, 120 Volt, single phase, 60 Hz, alternating current.
- Outlet Receptacle – Properly grounded 3-prong receptacle to be located so the power cord is accessible when the dryer is in an installed position. If a 2-prong receptacle is present, it is the owner's responsibility to have a licensed electrician replace it with a properly grounded 3-prong grounding type receptacle.

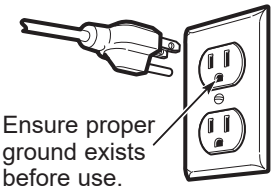

ELECTRICAL CONNECTION INFORMATION FOR GAS DRYERS (cont.)

- Dryer must be electrically grounded in accordance with local codes and ordinances, or in the absence of local codes, with the latest edition of the NATIONAL ELECTRICAL CODE, ANSI/NFPA NO. 70 or CANADIAN ELECTRICAL CODE, CSA C22.1. Check with a licensed electrician if you are not sure that the dryer is properly grounded.

GROUNDING INSTRUCTIONS

This dryer must be grounded. In the event of a malfunction or breakdown, grounding will reduce the risk of electric shock by providing a path of least resistance for electric current. This dryer uses a cord having an equipment-grounding conductor and a grounding plug. The plug must be plugged into an appropriate outlet that is properly installed and grounded in accordance with all local codes and ordinances.

⚠WARNING Improper connection of the equipment-grounding conductor can result in a risk of electric shock. Check with a qualified electrician, or service representative or personnel, if you are in doubt as to whether the appliance is properly grounded. **DO NOT** modify the plug on the power supply cord. If it will not fit the outlet, have a proper outlet installed by a qualified electrician.

SAVE THESE INSTRUCTIONS

- If required by local codes, an external 18 gauge or larger copper ground wire (not provided) may be added. Attach to dryer cabinet with a #8-18 x ½" sheet metal screw (available at any hardware store) to rear of dryer as illustrated.

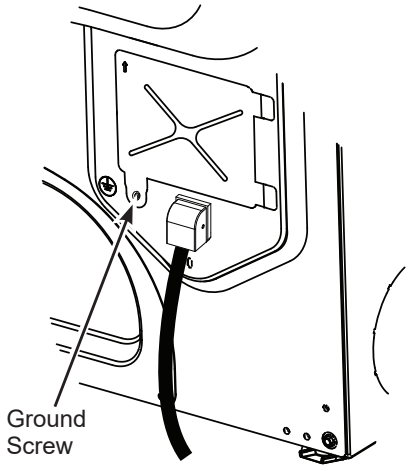

CONNECTING AN ELECTRIC DRYER

(Skip for gas dryers and if your dryer already has a power cord attached)

TOOLS YOU WILL NEED

- ☐ Slip-joint pliers
- ☐ Flat-blade screwdriver
- ☐ Phillips screwdriver
- ☐ Level

MATERIALS YOU WILL NEED

- ☐ 4” dia. metal elbow
- ☐ Metal strain relief clamp (UL recognized)
- ☐ 4” Duct clamps (2) or 4” spring clamps (2)
- ☐ Safety glasses
- ☐ 4” dia. metal duct (recommended)
- ☐ 4” dia., UL-listed flexible metal duct (if needed)
- ☐ Access Panel (Kit WE16X29317) (if needed)
- ☐ Gloves
- ☐ Exhaust hood
- ☐ Duct tape
- ☐ Dryer power cord kit (not provided with dryer)

  UL rated 120/240V, 30A with 3 or 4 prongs. Identify the plug type as per the house receptacle before purchasing line cord.

  Stacking installations may require a power cord up to 6 feet in length.

Before making the electrical connection, turn off the circuit breaker(s) or remove the dryer’s circuit fuse(s) at the electrical box. Be sure the dryer cord is unplugged from the wall. NEVER LEAVE THE ACCESS COVER OFF THE TERMINAL BLOCK.

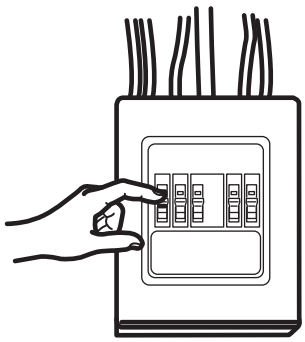

⚠WARNING - Electrical Shock Hazard

Disconnect power supply before servicing.
Replace all parts and panels before operating.
Failure to do so can result in death or electrical shock.

POWER CORDS

GE Appliances strongly recommends the use of factory specified parts. Select the power cord to fit your installation requirements.

Part Number	Type	Length	Amperage
WX9X2	3-Prong	4 Feet	30
WX9X3	3-Prong	5 Feet	30
WX9X4	3-Prong	6 Feet	30
WX9X18	4-Prong	4 Feet	30
WX9X19	4-Prong	5 Feet	30
WX9X20	4-Prong	6 Feet	30

Order on-line at **GEApplianceparts.com** today, 24 hours a day or by phone at 877.959.8688 during normal business hours. In Canada, visit your local GE Appliances parts distributor or call 800.661.1616 or **GEAppliances.ca/en/products/parts-filters-accessories**.

ELECTRICAL CONNECTION INFORMATION FOR ELECTRIC DRYERS

For electrical connections using a power cord:

⚠WARNING - Fire Hazard

Use a new UL-listed 240V 30 amp dryer power supply cord with closed ring terminals or spade terminals with upturned ends.

Use a UL-listed strain relief.

Disconnect power before making electrical connections.

Connect neutral wire (white or center wire) to center terminal.

Ground wire (green or bare wire) must be connected to green ground connector.

Connect remaining two supply wires to remaining two terminals.

Securely tighten all electrical connections.

Replace the terminal block cover.

Failure to do so can result in death, fire or electrical shock.

GROUNDING INSTRUCTIONS

For a grounded, cord-connected dryer: This dryer must be grounded. In the event of a malfunction or breakdown, grounding will reduce the risk of electric shock by providing a path of least resistance for electric current. This dryer uses a cord having an equipment-grounding conductor and a grounding plug. The plug must be plugged into an appropriate outlet that is properly installed and grounded in accordance with all local codes and ordinances.

⚠WARNING Improper connection of the equipment-grounding conductor can result in a risk of electric shock. Check with a qualified electrician, or service representative or personnel, if you are in doubt as to whether the appliance is properly grounded. **DO NOT** modify the plug on the power supply cord. If it will not fit the outlet, have a proper outlet installed by a qualified electrician.

SAVE THESE INSTRUCTIONS

⚠WARNING - Electrical Shock Hazard

TO PREVENT ELECTRIC SHOCK, DISCONNECT POWER BEFORE SERVICING.

This dryer should be connected to an individual branch circuit with 10 gauge copper wire minimum through a 30 amp fuse or circuit breaker. **DO NOT** fuse neutral.

Use copper conductors only.

ELECTRICAL CONNECTION INFORMATION FOR ELECTRIC DRYERS

For direct wire connections:

⚠WARNING - Fire Hazard

Use 10 gauge copper wire.

Use a UL-listed strain relief.

Disconnect power before making electrical connections.

Connect neutral wire (white or center wire) to center terminal.

Ground wire (green or bare wire) must be connected to green ground connector.

Connect remaining two supply wires to remaining two terminals.

Securely tighten all electrical connections.

Replace the terminal block cover.

Failure to do so can result in death, fire or electrical shock.

GROUNDING INSTRUCTIONS

For a permanently connected dryer: This dryer must be connected to a grounded metal, permanent wiring system, or an equipment-grounding conductor must be run with the circuit conductors and connected to the equipment-grounding terminal on the appliance.

⚠WARNING Improper connection of the equipment-grounding conductor can result in a risk of electric shock. Check with a qualified electrician, or service representative or personnel, if you are in doubt as to whether the appliance is properly grounded.

SAVE THESE INSTRUCTIONS

⚠WARNING - Electrical Shock Hazard

TO PREVENT ELECTRIC SHOCK, DISCONNECT POWER BEFORE SERVICING.

This dryer should be connected to an individual branch circuit with 10 gauge copper wire minimum through a 30 amp fuse or circuit breaker. **DO NOT** fuse neutral.

Use copper conductors only.

CONNECTING AN ELECTRIC DRYER (cont.)

CONNECTING DRYER USING 4-WIRE CONNECTION (MUST BE USED FOR MOBILE HOME INSTALLATION)

NOTE: Since January 1, 1996, the National Electrical Code requires that new constructions use a 4-wire connection to an electric dryer. A 4-wire cord must also be used where local codes do not permit grounding through the neutral. 3-wire connection is NOT for use on new construction.

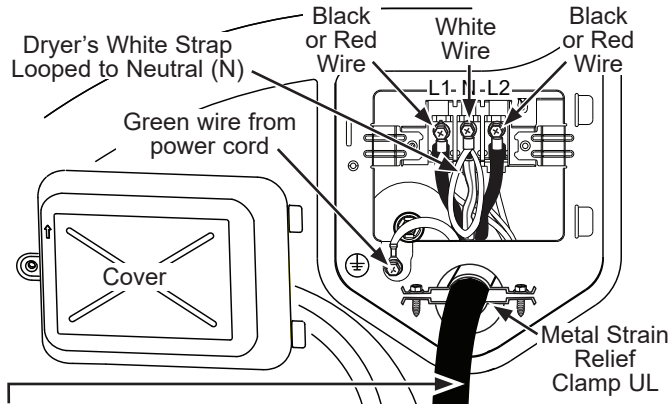

4 #10 AWG minimum copper conductors or 120/240V 30A power supply cord kit marked for use with dryers and provided with closed loop or spade terminals with upturned ends (not supplied).

1. Turn off the circuit breaker(s) (30 amp) or remove the dryer's circuit fuse at the electrical box.
2. Be sure the dryer cord is unplugged from the wall receptacle.
3. Remove the power cord cover located at the lower back.
4. Remove green ground screw and retain for use in Step 7. Leave one end of the short white strap loose until Step 6. Remove center screw (marked N) in terminal block.
5. Place the UL-recognized metal strain relief clamp to power cord entry hole. Bring power cord through strain relief clamp.
6. Connect power cord as follows:
   - **A.** Connect the 2 hot lines to the outer screws of the terminal block (marked L1 and L2).
   - **B.** Connect the neutral (white) line and the loose end of the short white strap to the center of the terminal block (marked N).
7. Attach ground wire of power cord with the green ground screw (hole to left of strain relief clamp). Tighten all terminal block screws (3) securely.
8. Properly secure power cord to strain relief clamp.
9. Reinstall the cover.

NEVER LEAVE THE COVER OFF OF THE TERMINAL BLOCK.

CONNECTING DRYER USING 3-WIRE CONNECTION

If required, by local code, install external ground (not provided) to grounded metal, cold water pipe, or other established ground determined by a qualified electrician.

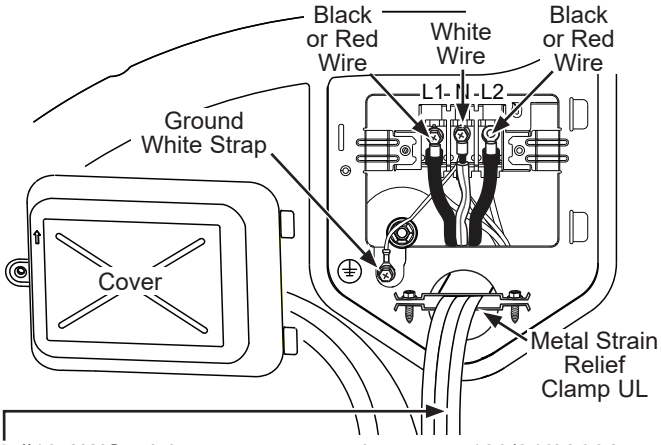

3 #10 AWG minimum copper conductors or 120/240V 30A power supply cord kit marked for use with dryers and provided with closed loop or spade terminals with upturned ends (not supplied).

3-wire Connection

Not for use in Canada.

DO NOT use for Mobile Home Installations.

NOT for use on new construction.

NOT for use on recreational vehicles.

NOT for use in areas where local codes prohibit grounding through the neutral conduction.

1. Turn off the circuit breaker(s) (30 amp) or remove the dryer's circuit fuse at the electrical box.
2. Be sure the dryer cord is unplugged from the wall receptacle.
3. Remove the power cord cover located at the lower back.
4. Place the UL-recognized metal strain relief clamp to power cord entry hole. Bring power cord through strain relief clamp.
5. Connect power cord as follows:
   - **A.** Connect the 2 hot lines to the outer screws of the terminal block (marked L1 and L2).
   - **B.** Connect the neutral (white) line to the center of the terminal block (marked N).
6. Be sure ground white strap is connected to green ground screw on cabinet rear. Tighten all terminal block screws (3) securely.
7. Properly secure power cord to strain relief clamp.
8. Reinstall the cover.

NEVER LEAVE THE COVER OFF OF THE TERMINAL BLOCK.

EXHAUSTING THE DRYER

⚠WARNING - **Fire Hazard**

This dryer MUST be vented to the outdoors.

Use only 4” rigid metal ducting for the home exhaust duct.

Use only 4" rigid metal, UL-listed flexible metal, or UL-listed metal foil dryer transition duct to connect the dryer to the home exhaust.

DO NOT use any plastic to vent the dryer, this includes the home exhaust duct, dryer transition duct, or within the dryer.

DO NOT use flexible metal or metal foil ducting for a home exhaust duct or within the dryer.

DO NOT exhaust into a chimney, kitchen exhaust, gas vent, wall, ceiling, attic, crawl space, or concealed space of a building.

DO NOT install a screen in or over the exhaust duct.

DO NOT install a booster fan in the exhaust duct.

DO NOT use duct longer than specified in the exhaust length table.

Failure to follow these instructions can result in death or fire.

TOOLS AND MATERIALS YOU WILL NEED TO INSTALL EXHAUST DUCT

☐ 1/4" Socket & Nut Driver

☐ 1/4" Socket & Wrench

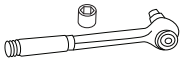

☐ Duct tape or duct clamp

☐ Vent hood

PARTS AVAILABLE FROM GEAPPLIANCEPARTS.COM OR LOCAL SERVICE ORGANIZATIONS

WE16X29317	Dryer Venting Kit
PM8X85	Outdoor exhaust hood
WX08X10130	4” Dryer exhaust clamp

CONNECTING THE DRYER TO HOUSE VENT

RIGID METAL TRANSITION DUCT

- For best drying performance, a rigid metal transition duct is recommended.
- Rigid metal transition ducts reduce the risk of crushing and kinking.

UL-LISTED FLEXIBLE METAL CLOTHES DRYER TRANSITION DUCT

- If rigid metal cannot be used, then UL-listed flexible metal clothes dryer transition duct (GE Appliances part – PM08X10085) can be used.
- Never install transition duct in walls, ceilings, floors or other enclosed spaces.
- Total length of transition duct should not exceed 8’ (2.4 m).
- For many applications, installing elbows at both the dryer and the wall is highly recommended (see illustrations in next section). Elbows allow the dryer to sit close to the wall without kinking and/or crushing the transition duct, maximizing drying performance.
- Avoid resting the duct on sharp objects.

UL-LISTED FLEXIBLE METAL (FOIL-TYPE) TRANSITION DUCT

- In special installations, it may be necessary to connect the dryer to the home exhaust vent using flexible metal (foil-type) transition duct. UL–LISTED universal flexible dryer transition duct (GE Appliances parts – PM8X73 or WX8X73) may be used ONLY in installations where rigid metal or flexible metal transition ducting cannot be used AND where a 4” diameter can be maintained throughout the entire length of the transition duct.
- In Canada and the United States, only transition ducts that comply with “**UL 2158A STANDARD FOR CLOTHES DRYER TRANSITION DUCT**” shall be used.
- Avoid resting the duct on sharp objects.
- For best drying performance:
  1. Slide one end of the duct over the clothes dryer outlet pipe.
  2. Secure the duct with a clamp.
  3. With the dryer in its permanent position, extend the duct to its full length. Allow 2” of duct to overlap the exhaust pipe. Cut off and remove excess duct. Keep the duct as straight as possible for maximum airflow.
  4. Secure the duct to the exhaust pipe with the other clamp.

EXHAUSTING THE DRYER (cont.)

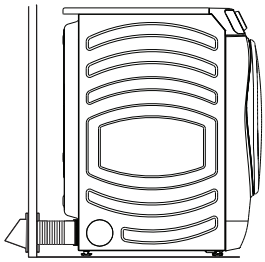

- **DO** cut duct as short as possible and install straight into wall.

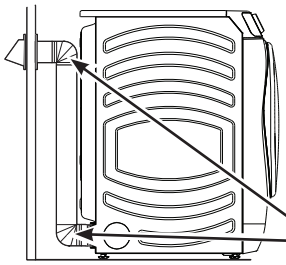

- **DO** use elbows when turns are necessary.

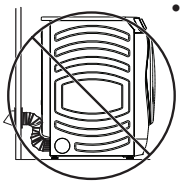

- **DO NOT** bend or collapse ducting. Use elbows if turns are necessary.

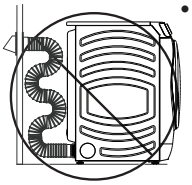

- **DO NOT** use excessive exhaust length. Cut duct as short as possible.

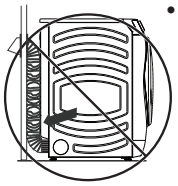

- **DO NOT** crush duct against the wall.

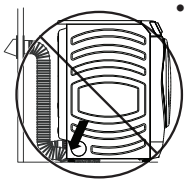

- **DO NOT** set dryer on duct.

EXHAUST LENGTH

Using exhaust longer than specified length will:

- Increase the drying times and the energy cost.
- Reduce the dryer life.
- Accumulate lint, creating a potential fire hazard.

The correct exhaust installation is <u>YOUR RESPONSIBILITY</u>.

Problems due to incorrect installation are not covered by the warranty.

The MAXIMUM ALLOWABLE length of the exhaust system depends upon the type of duct, number of turns, the type of exhaust hood (wall cap) and all conditions noted on the chart.

- Internal elbows added for side or bottom vent conversions must be included in the total elbow count.
- Any elbow greater than 45° should be treated as a 90° elbow; one elbow of 45° or less may be ignored.
- Two 45° elbows will be treated like one 90° elbow.
- For the side exhaust installations, add one 90° elbow to the chart.
- For every additional 90° elbow, reduce the allowable vent system length by 10 feet.
- When calculating the total vent system length, you must add all the straight portions and elbows of the system (including the transition duct).

EXHAUST LENGTH FOR NORMAL VENT MODELS

	RECOMMENDED MAXIMUM LENGTH	
	Exhaust Hood Types	
	Recommended	Use only for short run installations
	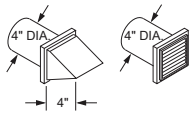	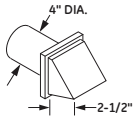
No. of 90° Elbows	Rigid Metal	Rigid Metal
0	90 Feet	60 Feet
1	60 Feet	45 Feet
2	45 Feet	35 Feet
3	35 Feet	25 Feet
4	25 Feet	15 Feet

EXHAUST LENGTH FOR LONG VENT MODELS

	RECOMMENDED MAXIMUM LENGTH	
	Exhaust Hood Types	
	Recommended	Use only for short run installations
	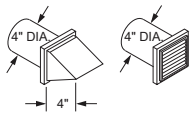	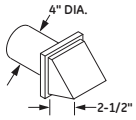
No. of 90° Elbows	Rigid Metal	Rigid Metal
0	200 Feet	175 Feet
1	185 Feet	165 Feet
2	175 Feet	155 Feet
3	165 Feet	145 Feet
4	155 Feet	135 Feet
5	145 Feet	125 Feet

EXHAUSTING THE DRYER (cont.)

EXHAUST SYSTEM CHECKLIST

HOOD OR WALL CAP

- Terminate in a manner to prevent back drafts or entry of birds or other wildlife.
- Termination should present minimal resistance to the exhaust airflow and should require little or no maintenance to prevent clogging.
- Wall caps must be installed at least 12” above ground level or any other obstruction with the opening pointed down.

SEPARATION OF TURNS

- For best performance, separate all turns by at least 4 ft. of straight duct, including distance between last turn and dampened exhaust hood (wall cap).

SEALING OF JOINTS

- All joints should be tight to avoid leaks. The male end of each section of duct must point away from the dryer.
- Duct joints should be made air- and moisture-tight by wrapping the overlapped joints with duct tape or aluminum tape.
- Do not assemble ductwork with any fasteners that extend into the duct. These fasteners can accumulate lint, creating a potential fire hazard.
- Horizontal runs should slope down towards the outdoors 1/4” per foot.
- Provide an access for inspection and cleaning of the exhaust system, especially at turns and joints. Exhaust system shall be inspected and cleaned at least once a year.

INSULATION

- Ductwork that runs through an unheated area or is near air conditioning should be insulated to reduce condensation and lint build-up.

BEFORE YOU BEGIN

- Remove and discard existing plastic or metal foil duct and replace with UL-listed duct.
- Remove any lint from the wall exhaust opening.

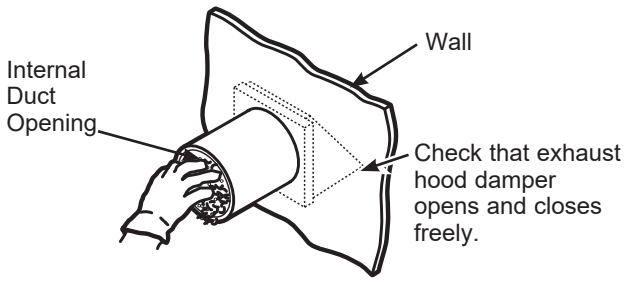

STANDARD REAR EXHAUST

We recommend that you install your dryer before installing your washer. This will permit direct access for easier exhaust connection.

Slide the end of the exhaust duct on the back of the dryer and secure with duct tape or a hose clamp.

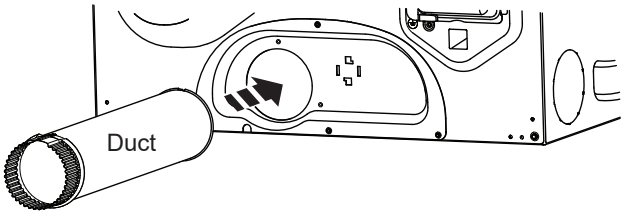

NOTE: We strongly recommend using rigid metal exhaust duct. However, if flexible ducting is used it must be UL-Listed metal, not plastic.

- For straight line installation, connect the dryer exhaust to the external exhaust hood using duct tape or clamp.

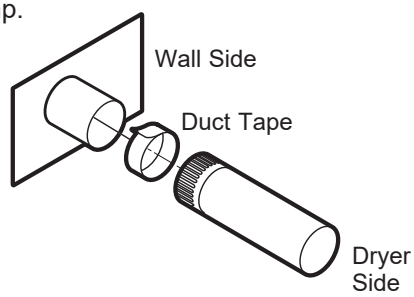

RECOMMENDED CONFIGURATION TO MINIMIZE EXHAUST BLOCKAGE

Using duct elbows will prevent duct kinking and collapsing.

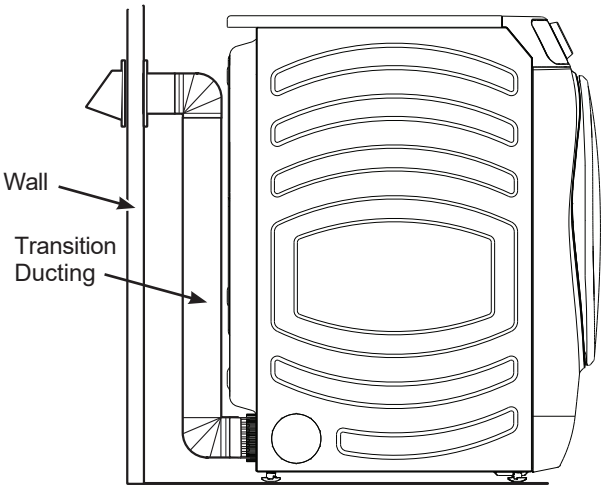

EXHAUSTING THE DRYER (cont.)

SIDE VENTING

⚠WARNING - Fire Hazard

Disconnect dryer from electrical supply.

Wear gloves and arm guards.

Close the back opening with the access panel included in kit WE16X29317.

Failure to do so may result in fire, electrical shock or lacerations.

- Remove the 4 screws that secure the access panel and save. Remove the access panel.

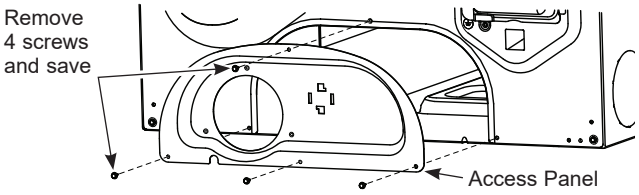

- Detach and remove the right or left side knockout as desired. Remove the screw that secures the dryer exhaust duct and save. Pull the exhaust duct out of the dryer.

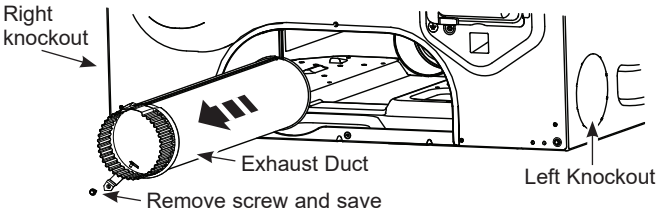

- Locate the 12-1/2” exhaust duct and elbow duct from the kit and assemble together. Apply duct tape around the joint to eliminate leaks between ducts.

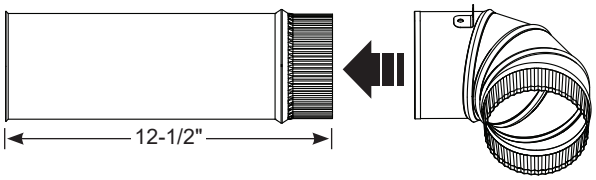

SIDE VENTING (cont.)

- Insert and connect the elbow/exhaust duct assembly to the blower housing and orient the elbow for either left or right venting.

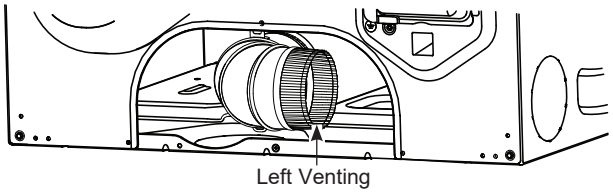

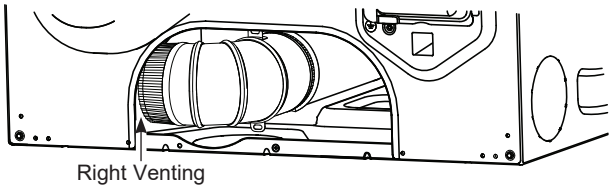

- Locate the bracket from the kit.
- Remove the adhesive liner from the bottom of the bracket and position it behind the elbow duct tab.
- Press down firmly to secure the bracket to the bottom of the dryer.

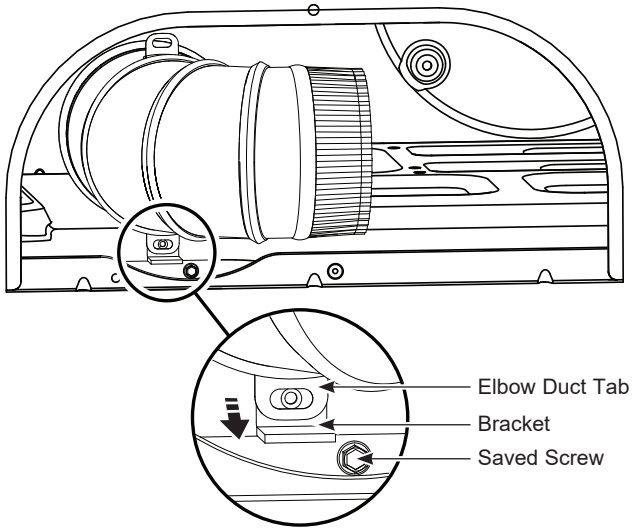

- Using one of the screws from earlier, secure the elbow duct tab to the bracket.

EXHAUSTING THE DRYER (cont.)

SIDE VENTING (cont.)

For LEFT venting:

- Locate the 15-1/2” exhaust duct from the kit.
- Insert exhaust duct through knockout opening on the **LEFT** side of dryer.
- Assemble exhaust duct to elbow duct.
- Wrap the joint with duct tape to avoid air leaks.

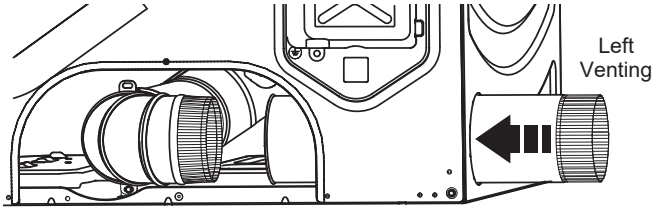

For RIGHT venting:

- Locate the 9-1/2” exhaust duct from the kit.
- Insert exhaust duct through knockout opening on the **RIGHT** side of dryer.
- Assemble exhaust duct to elbow duct.
- Wrap the joint with duct tape to avoid air leaks.

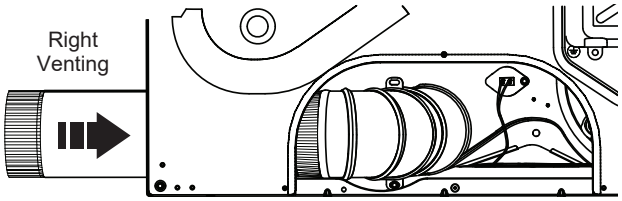

- Install the new access panel from the kit.
- Secure access panel with 4 screws saved from earlier.

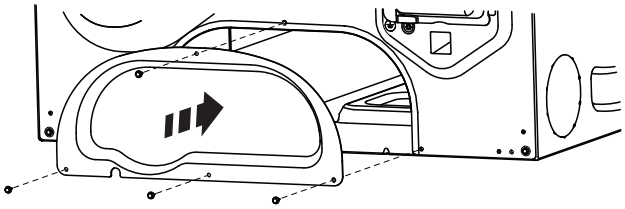

NEVER LEAVE THE BACK OPENING WITHOUT THE ACCESS PANEL.

BOTTOM VENTING

Dryer Exhaust to the bottom of cabinet for Gas and Electric models WITHOUT Built-In Pedestal™.

⚠WARNING - Fire Hazard

Disconnect dryer from electrical supply.

Wear gloves and arm guards.

Close the back opening with the access panel included in kit WE16X29317.

Failure to do so may result in fire, electrical shock or lacerations.

- Remove the 4 screws that secure the access panel and save. Remove the access panel.

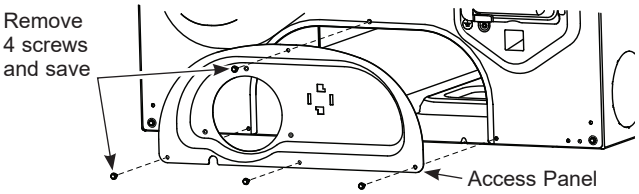

- Remove the screw that secures the dryer exhaust duct and save. Pull the exhaust duct out of the dryer.

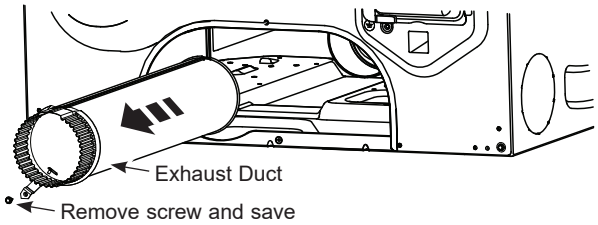

- Detach and remove the bottom knockout.

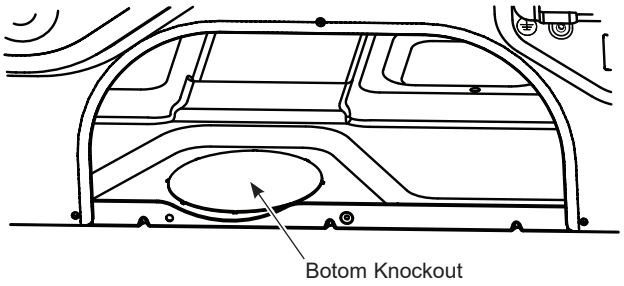

EXHAUSTING THE DRYER (cont.)

BOTTOM VENTING (cont.)

- Locate the 12-1/2” exhaust duct and elbow duct from the kit and assemble together. Apply duct tape around the joint to eliminate leaks between ducts.

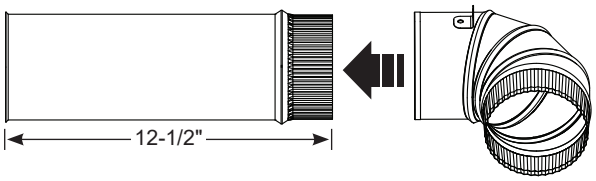

- Insert and connect the elbow/exhaust duct assembly to the blower housing and insert the elbow through the bottom knockout.

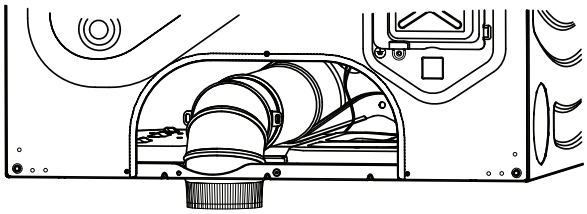

BOTTOM VENTING (cont.)

- Install the new access panel from the kit.
- Secure access panel with 4 screws saved from earlier.

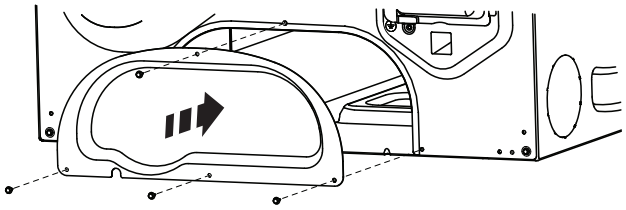

NEVER LEAVE THE BACK OPENING WITHOUT THE ACCESS PANEL.

FINAL SETUP

1 LEVEL THE DRYER

Stand the dryer upright near the final location and adjust the four leveling legs at the corners to ensure that the dryer is level from side to side and front to rear.

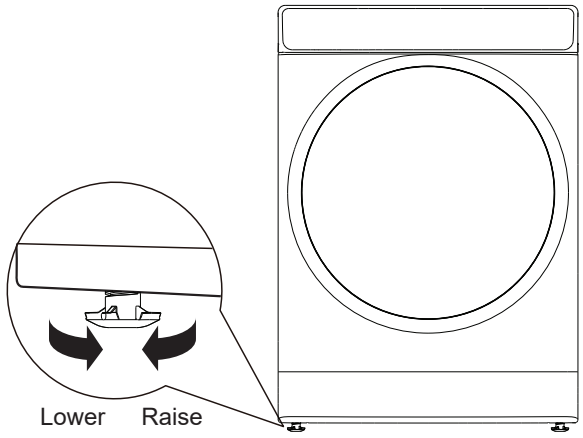

2 PLUG DRYER IN

NOTE: Stacking installations may require a power cord up to 6 feet in length.

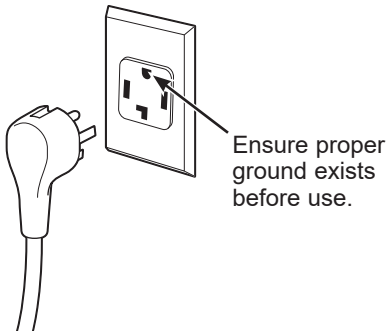

3 DRYER START-UP

Press the **Power** pad.

NOTE: If the dryer has been exposed to temperatures below freezing for an extended period of time, allow it to warm up before pressing **Power**. Otherwise, the display will not come on.

The dryer is now ready for use.

⚠WARNING - Electrical Shock Hazard

Disconnect power supply before servicing.

Replace all parts and panels before operating.

Failure to do so can result in death or electrical shock.

⚠WARNING - Shock Hazard

Certain internal parts are intentionally not grounded and may present a risk of electric shock only during servicing.

Service personnel – DO NOT contact the following parts while the appliance is energized: water valve, door switch, electronic board, igniter, thermostats, flame detector.

REVERSING THE DOOR SWING (Optional)

BEFORE YOU START

Unplug the dryer from its electrical outlet.

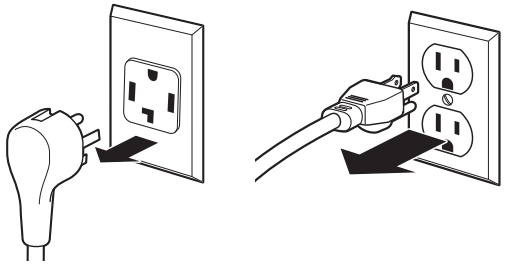

TOOLS YOU WILL NEED

❒ Phillips-head screwdriver ❒ T-25 torx driver ❒ 1/4” nut driver

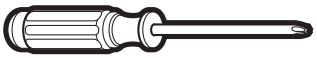
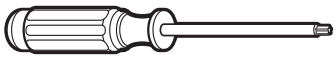
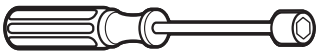

IMPORTANT NOTES

- Handle parts carefully to avoid scratching paint.
- Provide a non-scratching work surface for the door.
- Set screws down by their related parts to avoid using them in the wrong places.
- Once you begin, do not move the cabinet until door-swing reversal is completed.
- These instructions are for changing the hinges from the right side to the left side—if you ever want to switch them back to the right side, follow these same instructions and reverse all references to the left and right.

1 REMOVE THE STRIKE PLATE AND DOOR ASSEMBLY

- Open the dryer door.
- Remove the two screws from the strike plate using a T-25 torx driver.
- Remove the strike plate and set it aside.
- While supporting the door, remove the two screws from the hinge in the dryer face using a 1/4” nut driver.
- Lift the door assembly to remove it from the dryer face and set it aside on a protective surface.

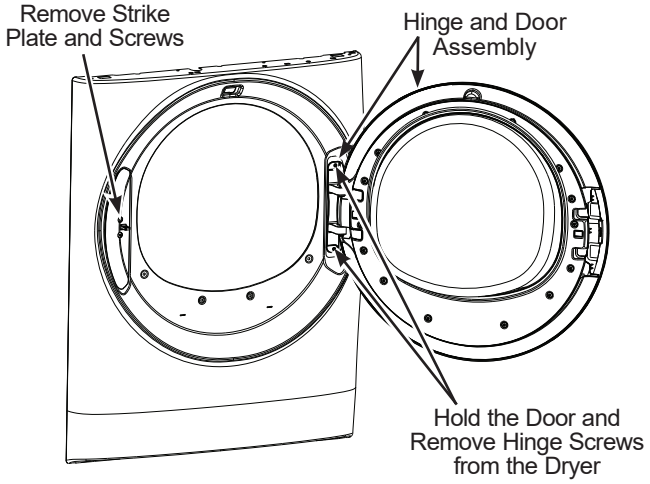

2 REMOVE THE INNER DOOR

- Remove the 14 screws from the inner door frame using a Phillips-head screwdriver and set them aside.
- Remove the inner door frame from the outer door.

NOTE: Do not remove the gasket from the inner door frame.

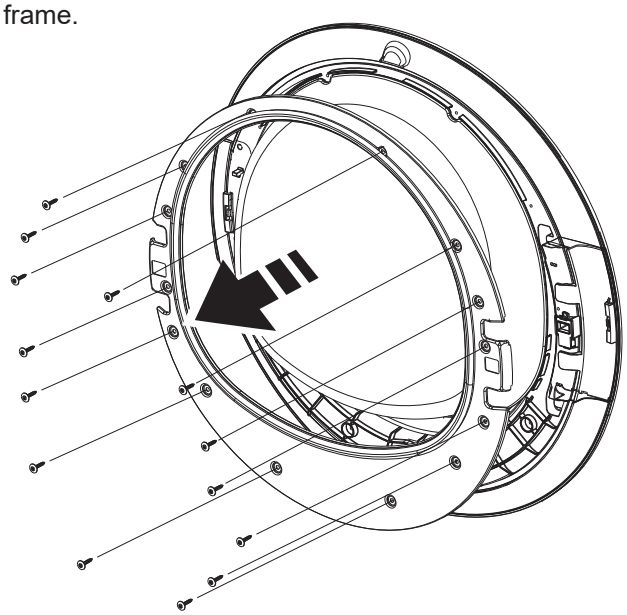

REVERSING THE DOOR SWING (Optional)

3 REMOVE, ROTATE AND REPLACE THE HANDLE AND HINGE INTO THE OPPOSITE SIDES

- Lift the handle and the hinge out of the door pockets.

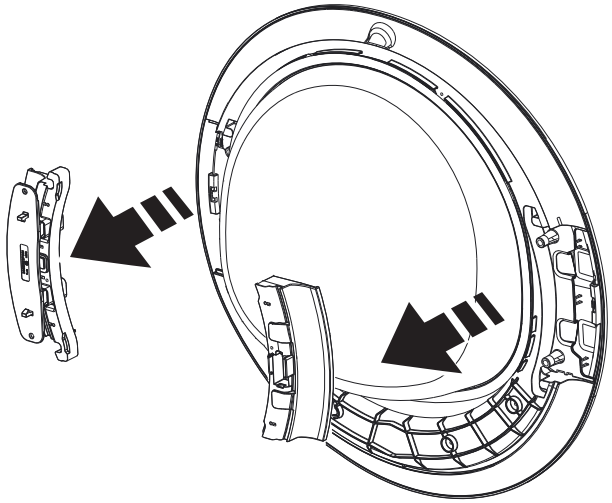

NOTE: Make sure the latch remains seated inside the handle. If it moves or falls out, seat it back into place.

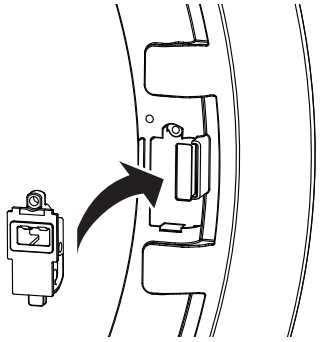

- Rotate the handle and hinge, and replace them back into the pockets on the opposite sides.

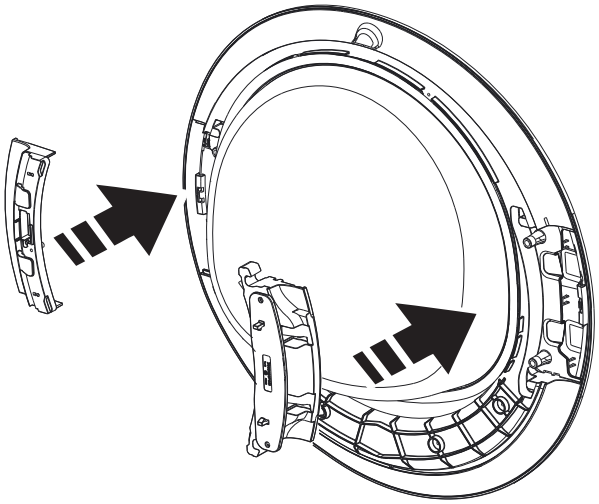

4 REPLACE THE INNER DOOR

- Replace the inner door frame into the outer door.
- Replace the 14 screws into the inner door, using a Phillips-head screwdriver, securing it to the outer door.

NOTE: Make sure the gasket is properly seated on the inner door frame when replaced.

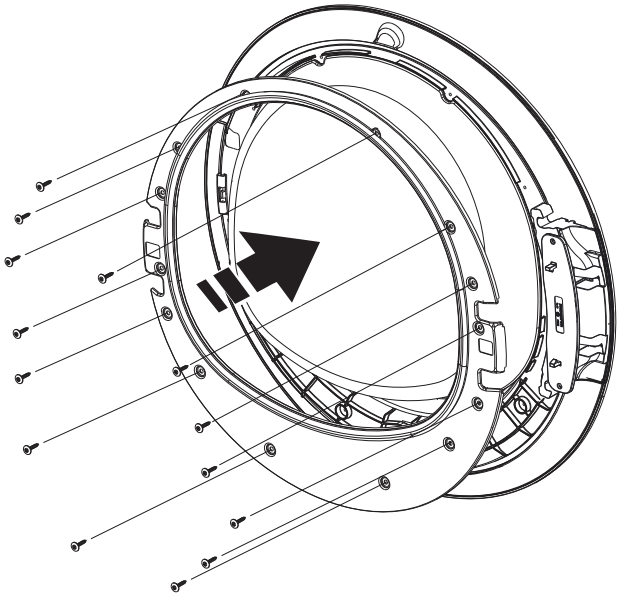

5 REPLACE THE STRIKE PLATE AND DOOR ASSEMBLY

- On the opposite side from where removed, replace the strike plate with its two screws using a T-25 torx driver.
- Lift the door assembly into place and secure it onto the dryer face with its two screws using a 1/4” nut driver.
- Close the dryer door.

  NOTE: Make sure the door opens and closes correctly. If not, repeat all steps making sure the gasket, all parts, and screws are securely seated.

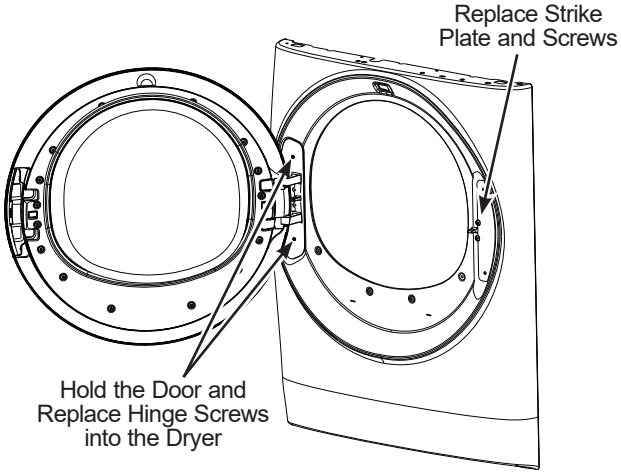

STACKING THE WASHER AND DRYER (if desired)

If you are planning to stack the washer and dryer, order Stacking Kit number **GFA28KITN** to be used for this dryer. Kit sold separately.

If you have any questions, call GE Appliances at 800.432.2737 or visit our Website at: GEAppliances.com
In Canada, call 800.561.3344 or visit www.GEAppliances.ca

BEFORE YOU BEGIN

Read these instructions completely and carefully.

- **IMPORTANT –** Save these instructions for local electrical inspector's use.
- **IMPORTANT –** Observe all governing codes and ordinances.
- **Note to Installer –** Be sure to leave these instructions with the Consumer.
- **Note to Consumer –** Keep these instructions for future reference.
- Installation **must** be performed by a qualified installer.
- Proper installation is the responsibility of the installer.

Stack dryer only on washer. Do not stack washer on dryer, washer on washer or dryer on dryer.

Do not modify this installation kit. Any modification will void the product Warranty.

⚠WARNING Disconnect power before installing. Failure to do so could result in serious injury or death.

⚠WARNING - **Excessive Weight Hazard**

- Use two or more people to install dryer.
- Avoid tipping and rupture of utility services.
- Dryer must be securely attached to the washer.
- **DO NOT** place the washer on top of the dryer.

Failure to do so may result in serious injury, death, or property damage.

Mobile Home or Manufactured Home Installation – Stacking of a gas dryer is not permitted in a mobile home or manufactured home.

INSTALLATION PREPARATION

Remove the packaging.

Flatten the product carton to use as a pad to lay the dryer down on its back or side. Continue using the carton to protect the finished floor in front of the installation location.

REQUIREMENTS FOR ALCOVE OR CLOSET INSTALLATION

⚠WARNING - **Explosion Hazard**

Keep flammable materials and vapors, such as gasoline, away from dryer.

Place dryer at least 18" (46 cm) above the floor for a garage installation.

Failure to do so can result in death, explosion, or fire.

- The dryer MUST be vented to the outdoors.
- Minimum clearance between dryer cabinet and adjacent walls or other surfaces is:
  - 0" either side*
  - 0" front
  - 0" rear
  - 0" top
- The rear of the dryer should face a wall.
- Consideration must be given to provide adequate clearance for installation and service.
- Closet doors must be louvered or otherwise ventilated and have at least 60 square inches of open area. If the closet contains both a washer and a dryer, doors must contain a minimum of 120 square inches of open area.

NOTE: WHEN THE EXHAUST DUCT IS LOCATED AT THE REAR OF THE DRYER, THE CONFIGURATION OF THE DUCTING MAY REQUIRE GREATER CLEARANCE.

Gas Dryers Only:

- No other fuel burning appliance shall be installed in the same closet as a gas dryer.
- The dryer must be disconnected from the gas supply piping during pressure testing at pressures greater than 1/2 psi (3.5 kPa).
- A 1/8 inch NPT minimum plugged tapping, accessible for test gauge connection, must be installed immediately upstream of the gas supply connection to the dryer.

MINIMUM CLEARANCE OTHER THAN ALCOVE OR CLOSET INSTALLATION

Minimum clearance to combustible surfaces and for air opening are: 0" both sides*, 0" rear and 0" top.

The rear of the dryer should face a wall.

Consideration must be given to provide adequate clearance for installation and service.

*For improved performance, a 1/2" clearance is suggested on either side.

STACKING THE WASHER AND DRYER (Optional Kit GFA28KITN)

TOOLS YOU WILL NEED

- ☐ Phillips screwdriver
- ☐ Open-ended wrench
- ☐ Pliers
- ☐ Gloves
- ☐ Level

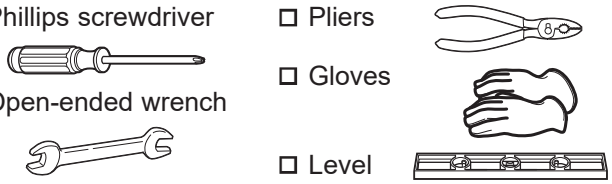

CONTENTS

- ☐ Bracket 32 (2)
- ☐ Bracket 34 (2)
- ☐ Spacer (2)
- ☐ #8 1/2" Screws (16)

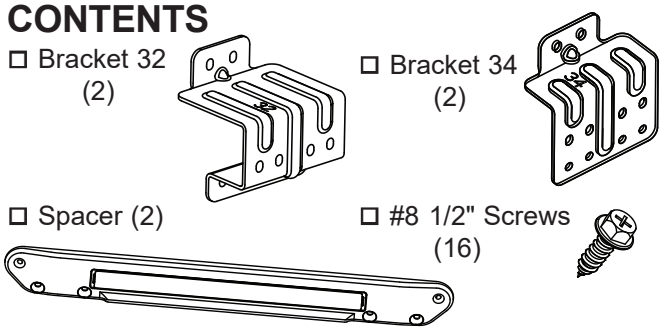

1 REMOVE THE DRYER LEVELING LEGS

A. Carefully lay the dryer on its back or side. Use the packing material so you don't scratch the finish on the dryer.

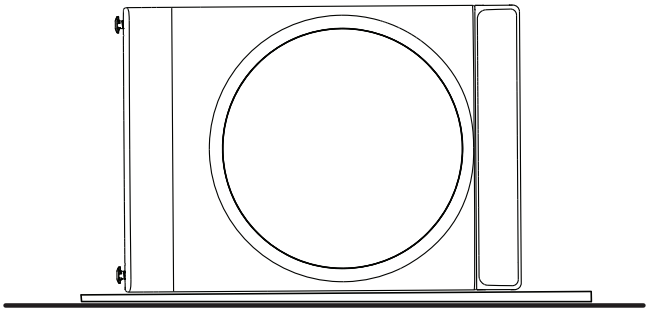

B. Use an open-end wrench or pliers to remove the dryer leveling legs. **NOTE:** Retain the leveling legs for future use.

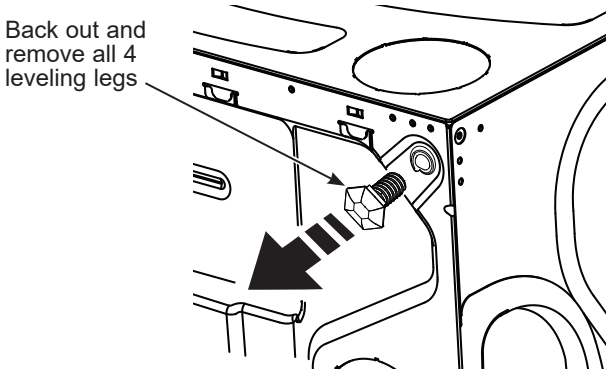

2 INSTALL SPACERS TO THE DRYER BOTTOM

Locate a spacer on the bottom side with its holes over the leveling leg holes. Attach spacer using 2 screws. Attach the second spacer on the other bottom side using 2 screws. **NOTE:** The arrows on the spacers should point to the outside.

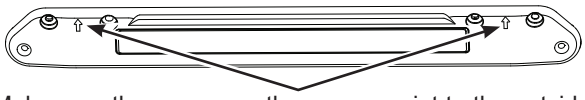

Make sure the arrows on the spacer point to the outside.

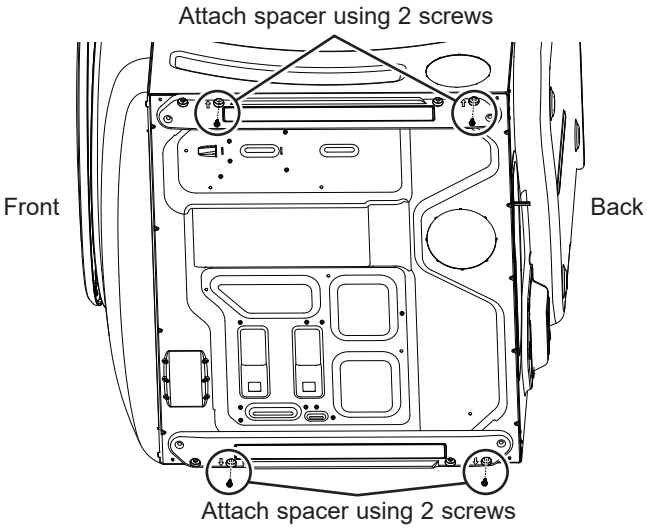

Make sure the arrows on the spacer point to the outside.

STACKING THE WASHER AND DRYER (Optional Kit GFA28KITN)

3 INSTALL THE APPROPRIATE BRACKETS TO THE WASHER

Washer Depth	Dryer Depth	Bracket Number
32"	32"	32
34"	32"	34

Select the appropriate brackets for your model sizes. Using the outside holes in the bracket, attach it to the top left corner of the washer back using 4 screws. Repeat on the top right corner of the washer back.

32 Brackets for 32" Washer & Dryer Combinations:

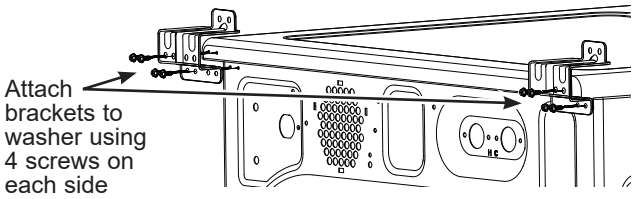

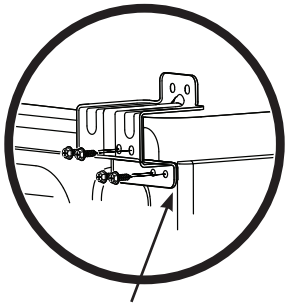

Install brackets flush at washers edges

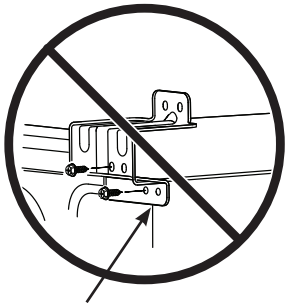

Do not install brackets overhanging washers edges

OR

34 Brackets for 34" Washer & 32" Dryer Combinations:

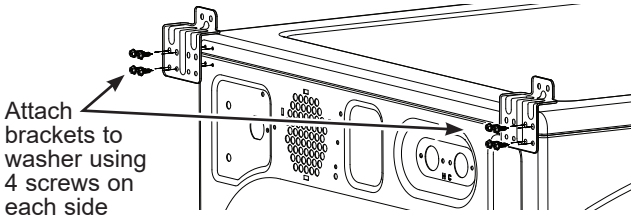

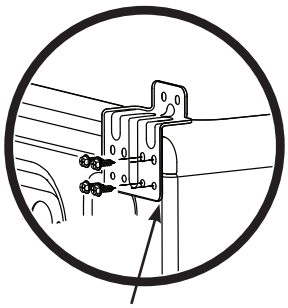

Install brackets flush at washers edges

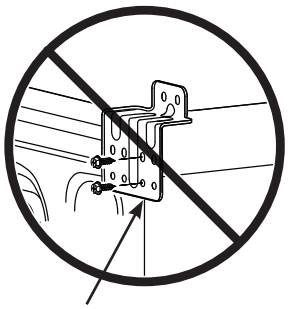

Do not install brackets overhanging washers edges

4 PREPARE THE WASHER AND DRYER

A. Place the washer in the approximate final installation location.

B. Make sure the washer is level. Refer to the washer Installation Instructions for details.

C. Upright the dryer.

D. Reverse the washer and dryer door swings, if desired, before stacking the dryer on the washer. See the washer and dryer Installation Instructions for details.

STACKING THE WASHER AND DRYER (Optional Kit GFA28KITN)

5 INSTALL THE DRYER AND THE BRACKET ON THE WASHER

⚠WARNING - **Excessive Weight Hazard**

- Use two or more people to install dryer.
- Avoid tipping and rupture of utility services.
- Dryer must be securely attached to the washer.
- **DO NOT** place the washer on top of the dryer.

Failure to do so may result in serious injury, death, or property damage.

A. Lift the dryer onto the top of the washer.

Be sure to lift the dryer high enough to clear the washer control panel.

Be careful not to scratch the top of the washer with the spacers. Protect the washer control panel with cardboard or other protection.

B. Align the holes in the back of the dryer with the holes in the bracket sticking up from the washer. Attach both brackets to the dryer with 2 screws on each side.

32 Brackets for 32" Washer & Dryer Combinations:

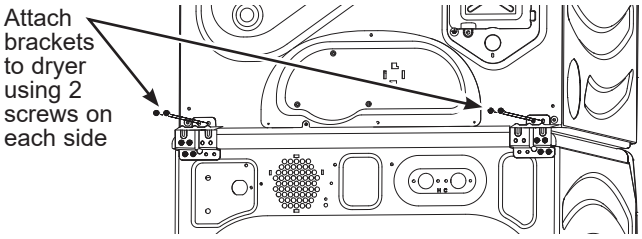

OR

34 Brackets for 34" Washer & 32" Dryer Combinations:

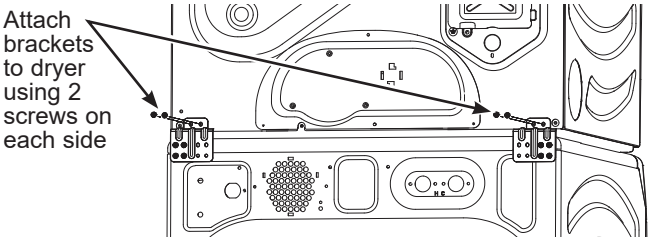

6 FINALIZE THE INSTALLATION

⚠CAUTION Do not push on the dryer once installed to top of the washer. Pushing on the dryer may result in pinched fingers.

A. Refer to the washer Installation Instructions to complete the washer installation.

B. Refer to the dryer Installation Instructions to complete the dryer installation.

C. Carefully slide or walk the stacked washer and dryer into place. Use felt pads or other sliding device to assist moving and to protect flooring.
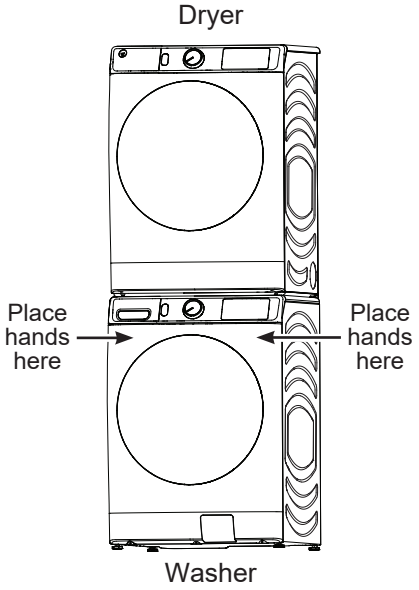
D. Verify the units are level. Make adjustments to the washer feet if necessary to level. It is always best to set the washer feet to the minimum height necessary to level the washer and dryer properly.