Specifications

PRG30 Model (Front View and Side View Dimensions)

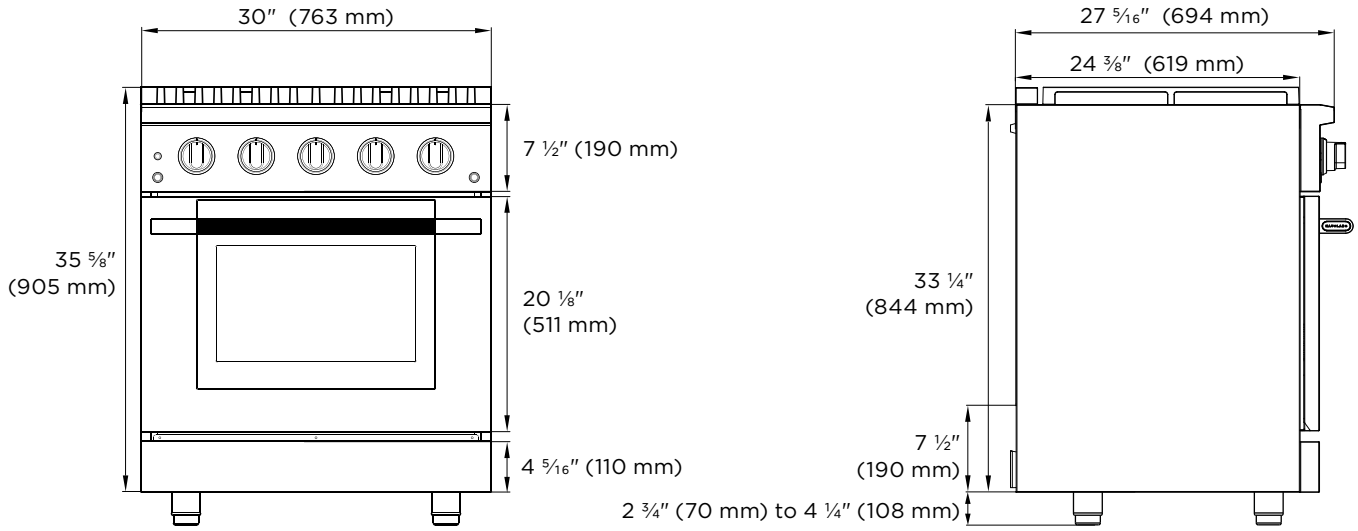

PRG36 Model (Front View and Side View Dimensions)

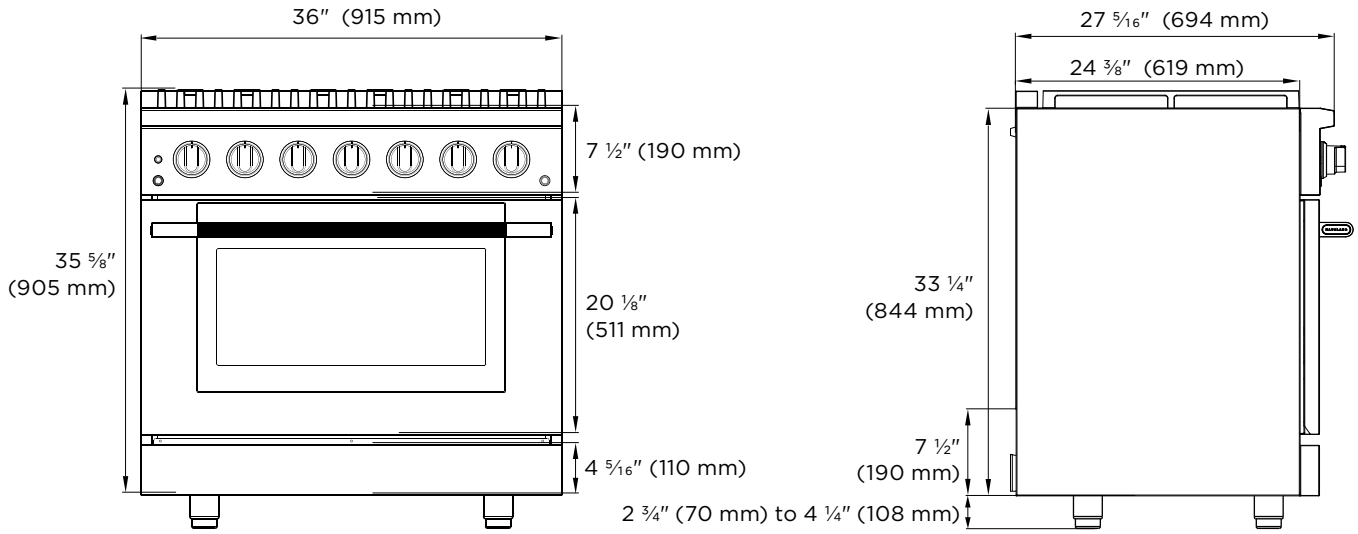

PRG48 Model (Front View and Side View Dimensions)

