HOME DECORATORS COLLECTION®

Item #1005235426
1002921462
1007631416
1003983888
1002921459
Model # Sonoma 48AL
Sonoma 48C
Sonoma 48MB
Sonoma 48PG
Sonoma 48W

USE AND CARE GUIDE

SONOMA 48 IN. VANITY

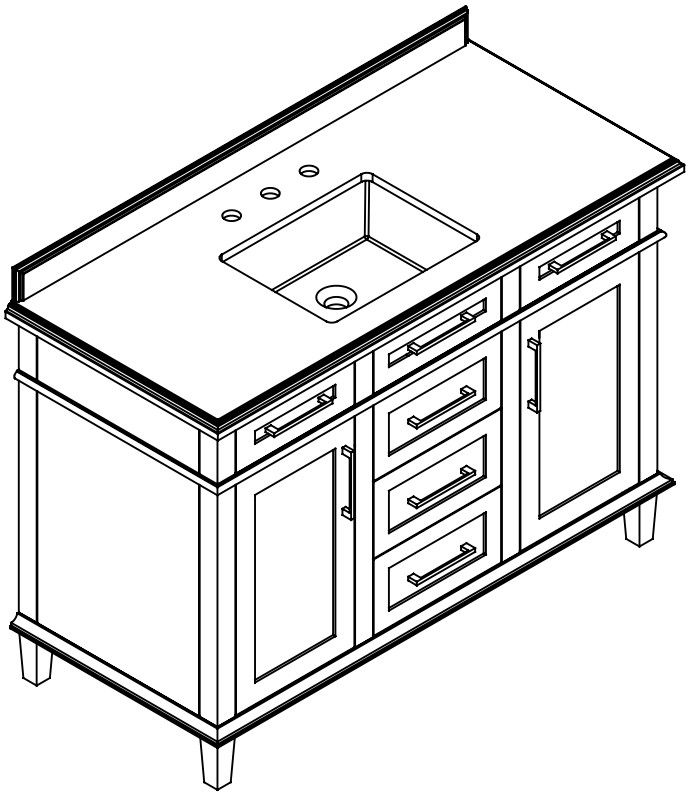

Questions, problems, missing parts?
Before returning to the store, call Home Decorators Collection Customer Service
8 a.m. - 7 p.m., EST, Monday - Friday, 9 a.m. - 6 p.m., EST, Saturday

1-800-986-3460

HOMEDEPOT.COM/HOMEDECORATORS

THANK YOU

We appreciate the trust and confidence you have placed in Home Decorators Collection through the purchase of this vanity. We strive to continually create quality products designed to enhance your home. Visit us online to see our full line of products available for your home improvement needs. Thank you for choosing Home Decorators Collection!

Table of Contents

Table Of Contents 2
Safety Information 2
Warranty 3
Warranty Information 3
Pre-Installation 3
Planning Installation 3
Tools Required 3
Package Contents 4
Installation 5
Shelf Adjustment 7
Drawer Adjustment 8
How To Adjust The Door's Position 9
Maintenance And Care 10
Care And Cleaning 10
Troubleshooting 10

Safety Information

DANGER

- □ Keep small parts away from children during assembly.
- □ Failure to follow warnings and cautions could result in serious injury.
- □ DO NOT use harsh bathroom cleaners or grout cleaners on any natural stone.

WARNING

- □ Read these instructions carefully and keep in a safe place.
- □ Adult assembly required.
- □ Do not over tighten connectors (screws, bolts, etc.) Overtightening can lead to product damage.
- □ Small parts may present choking hazard prior to assembly.
- □ Do not stand, step or climb on unit.

Caution

- □ USE preventative cleaning mesures to keep your stone pristine.
- □ USE sealers according to the product specific directions.
- □ Blot spills quickly, and wash with mild soap and warm water.
- □ Stone countertops (Granite, Marble, etc.) are suprisingly resiliant to stains and scratches. However, as a preventative measure, any spills on the stone surfaces should be wiped up within a reasonable amount of time. Do not let liquid sit on the stone overnight. Stones are most prone to staining by oil and acid, so be sure to blot these spills as soon as they happen. Follow up by cleaning the stone with a mild non-abrasive soap and water.
- □ Be sure to check all packing materials carefully for small parts that may have come loose inside the carton during shipment. If parts are missing, contact THE HOME DEPOT to obtain any missing parts.
- □ Using abrasive cleansers will damage the surface.

Warranty

WARRANTY INFORMATION

Home Decorators Collection products are manufactured to meet high-quality standards and workmanship and are backed by our 1-Year Warranty. This warranty is provided to the original consumer purchaser and covers any defects in materials or workmanship under normal residential use. We will replace, free of charge, any product or parts that prove to be defective during the warranty period.

To obtain warranty service, please return the product or part to any Home Depot retail location or contact our customer service at

1-800-986-3460 to receive a replacement item. Proof of purchase (the original sales receipt) from the original consumer purchaser is required for all warranty claims.

Pre-Installation

PLANNING INSTALLATION

Check the vanity for damage before installation. If any part of the vanity is missing or damaged, contact the Customer Service Team at 1-800-986-3460.

Ensure that the vanity location is accessible to water supply and drain lines. It is suggested that you rough-in the water lines and drain before installing the vanity.

NOTE: A drain pipe and trap are not included with this vanity.

TOOLS REQUIRED

NOTE: Tools are not included.



Safety goggles



Philips screwdriver



Level



Silicone

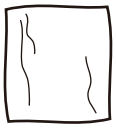

Clean rag

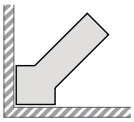

Caulk finishing tool

Pre-Installation (continued)

PACKAGE CONTENTS

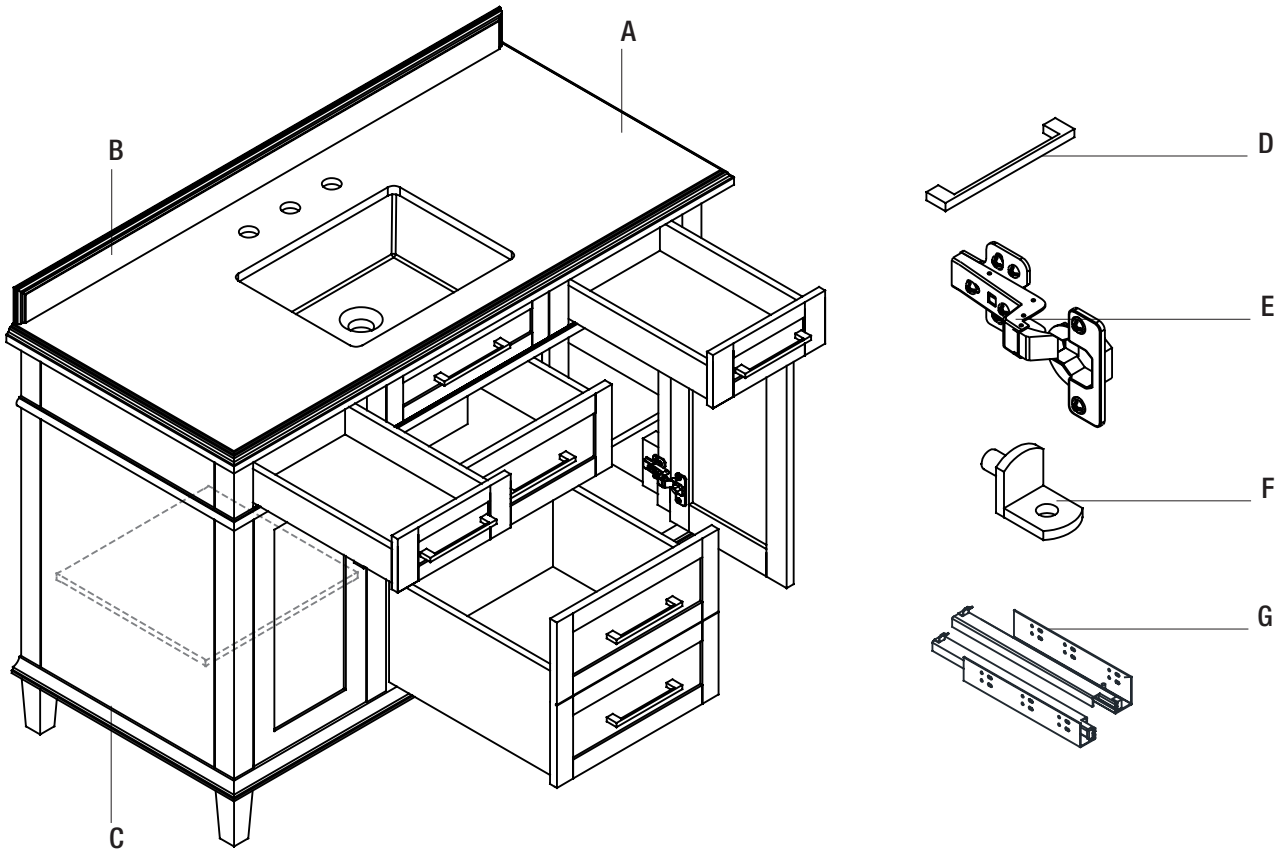

Part	Description	Quantity
A	Countertop	1
B	Backsplash	1
C	Vanity	1
D	Handle (Pre-assembled)	8
E	Hinge (Pre-assembled)	4
F	Shelf holder (Pre-assembled)	8
G	Drawer glides (A pair) (Pre-assembled)	4

Installation

1 Unpacking the countertop

- □ Unpack the countertop (A) from its vanity (C) and place it on a throw rug or other protective floor covering material to prevent damage to the countertop (A) or floor.
- □ Tear off the protective foam above the vanity (C).

DANGER: You will need at least two people to assemble this product properly.

CAUTION: During the unpacking and the handling of this vanity, note that the countertop is not pre-glued to the frame.

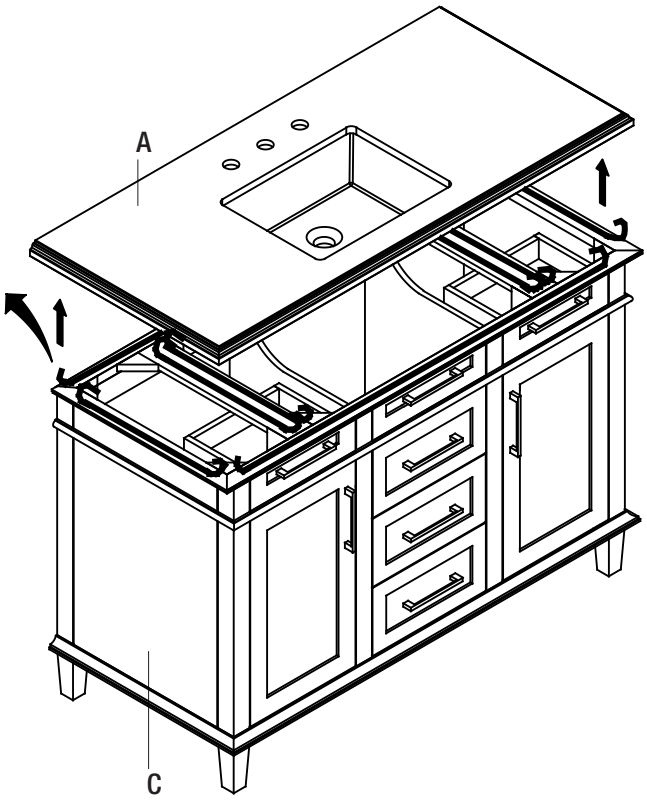

2 Attaching the countertop

- □ Apply lines of silicone onto the top of the vanity (C).
- □ Place the countertop (A) on top of the vanity (C).

CAUTION: Wear a pair of rubber gloves to protect your hands.

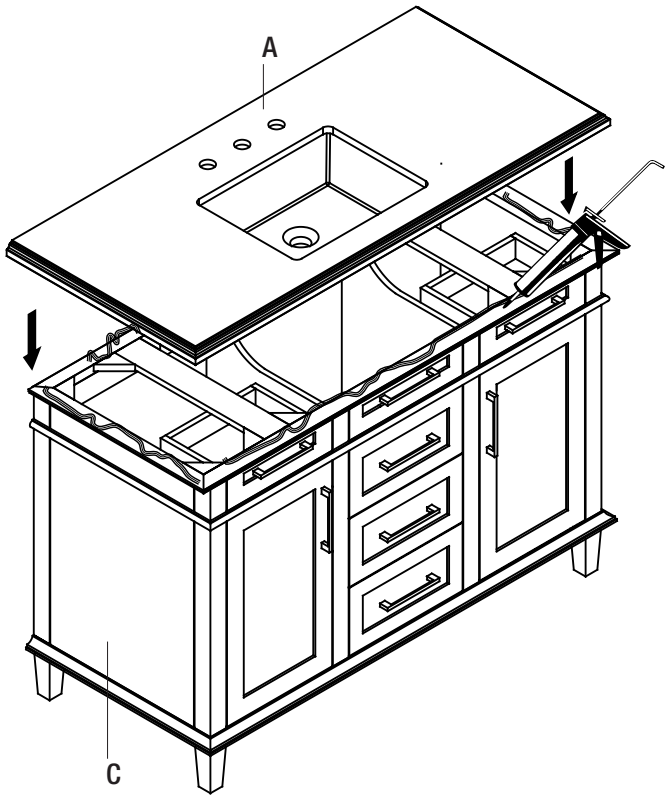

3 Countertop sealing

- □ Apply silicone sealant along the edge underneath the countertop where it meets the cabinet top trim.

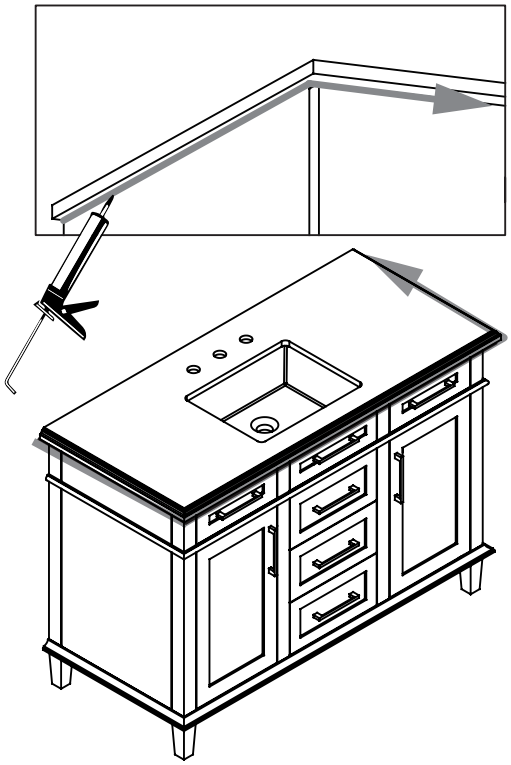

4 Attaching the backsplash

- □ Wipe off the area on the top of the countertop (A) where the backsplash (B) will sit using a clean rag.
- □ Apply a line of silicone onto the bottom of the backsplash (B).
- □ Align the backsplash (B) with the back edge. Slowly lower it onto the countertop (A) and gently press to adhere.

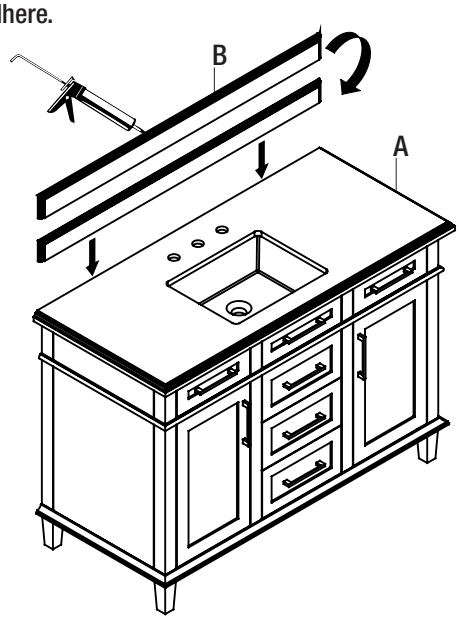

5 Completing the assembly

- □ Wipe away any seeping silicone from underneath the backsplash (B) with a caulk finishing tool.

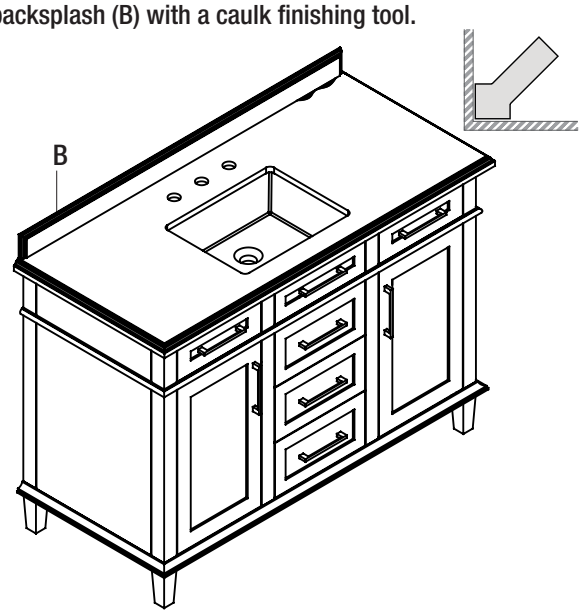

6 Drying

- □ Allow the vanity to dry for 24 hours before use.

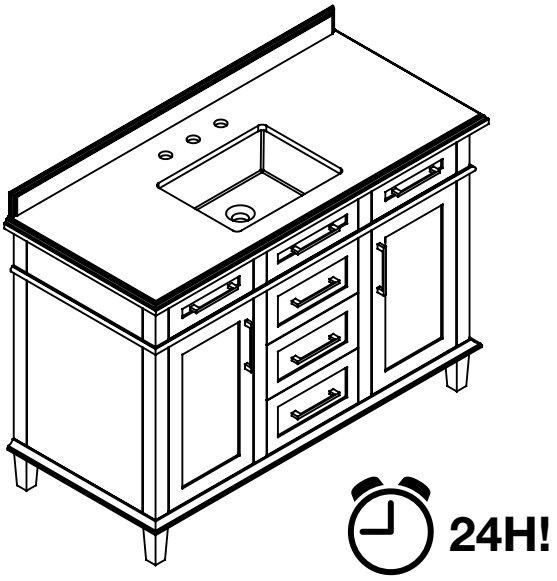

Shelf Adjustment

1 How to remove shelf

Each shelf can be removed or repositioned to create more space:

- □ Uninstall the screws and remove the shelf.
- □ Pull out the shelf holders.

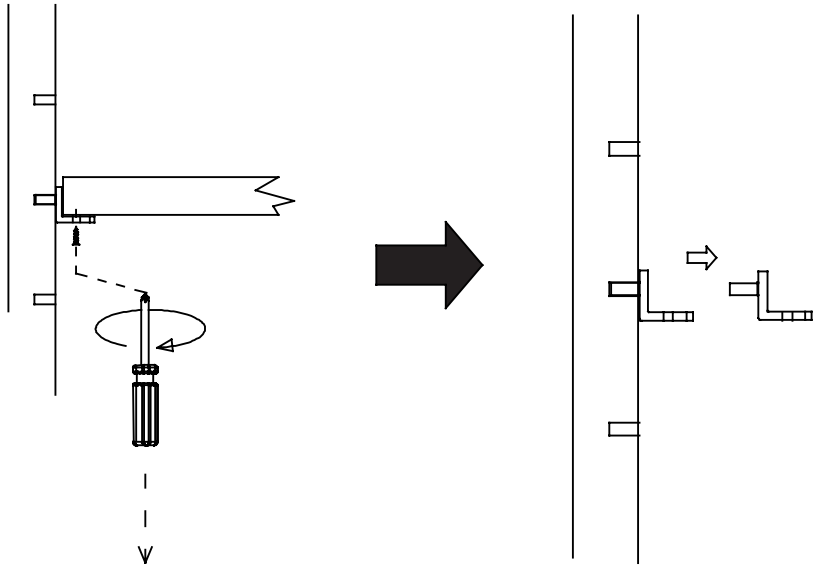

2 How to install shelf

- □ Select your desired location and push the shelf holder into place on both the right and left sides.
- □ Place the shelf onto the shelf holders. Make sure the shelf is properly level, and use screws to secure the shelf to the shelf holder.

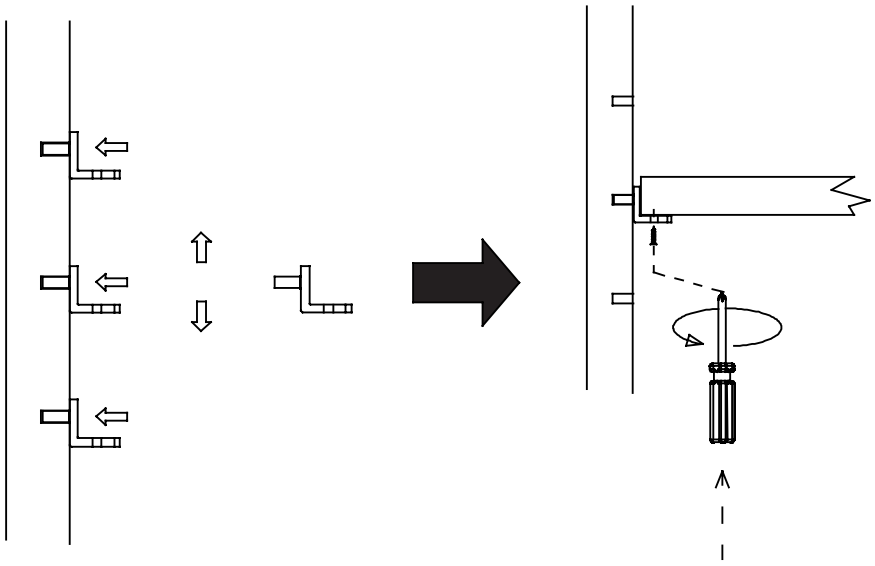

Drawer Adjustment

1 How to remove drawer

Each drawer is designed to be removed or replaced:

- □ 1.1. Remove the lock pins.
- □ 1.2. Lift the drawer from the front side.
- □ 1.3. Pull out the drawer to remove it.

1.1

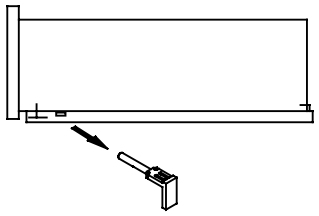

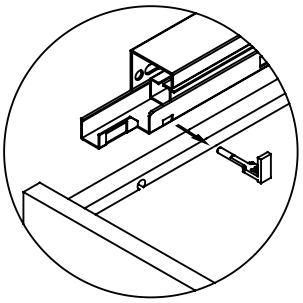

1.2

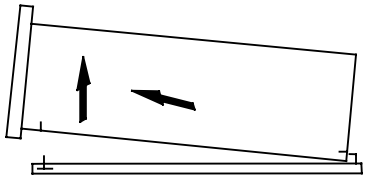

1.3

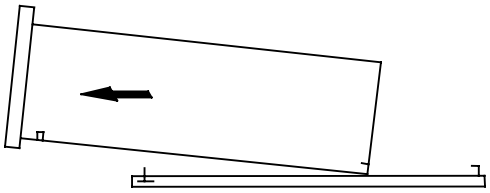

2 Drawer installation

- □ 2.1. Place the drawer back in first so that the drawer slides into the glide tab.
- □ 2.2. Put down and insert the drawer into the glides.
- □ 2.3. Completely slide in the drawer, then insert the lock pins.

2.1

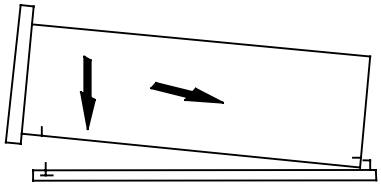

2.2

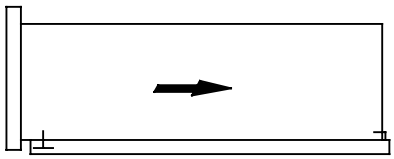

2.3

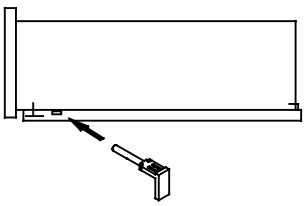

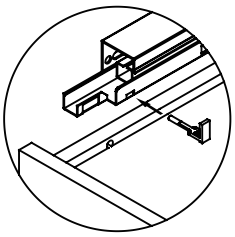

How to adjust the door's position

1 Door's in and out adjustment

□ To adjust the door front In and Out in-depth, loosen screw (AA), align the door, and tighten screw (AA).

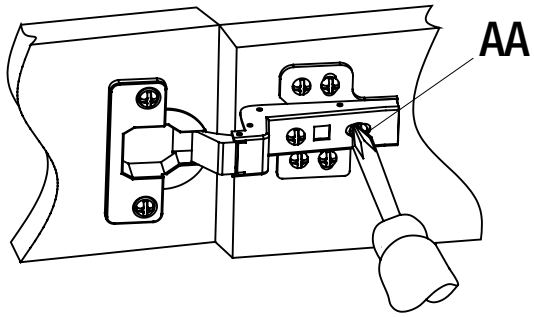

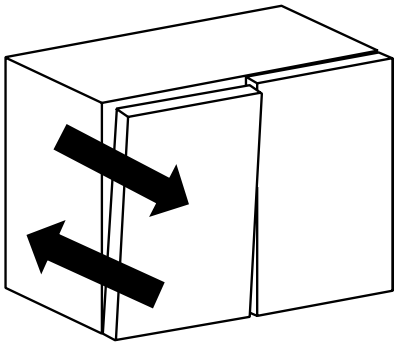

2 Door's left and right adjustment

□ To adjust the door front Left and Right, rotate the adjustment screw (BB).

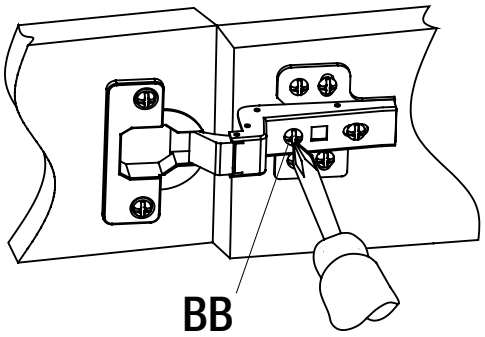

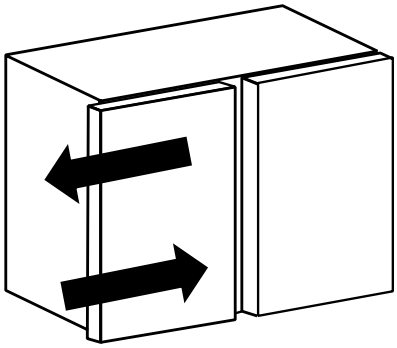

Maintenance and Care

- □ Stone countertops (Granite, Marble, etc.) are surprisingly resilient to stains and scratches. However, as a preventative measure, any spills on the stone surfaces should be wiped up within a reasonable amount of time. Don't let the liquid sit on the stone overnight. Stones are most prone to staining by oil and acid, so be sure to blot these spills up as soon as they happen. Follow up by cleaning the stone with mild non-abrasive soap and water.
- □ In bathrooms specifically, stone tends to attract soap scum, just like man-made tile. Rinse the vanity top with clean, hot water frequently.
- □ The use of sealers is also a powerful preventative measure. Your stone was sealed at the factory, but reapplication is necessary over time. How often is determined by the quality of the sealer used, and the frequency of use. We recommend using a penetrating non-toxic sealer for bath areas, but a food-safe sealer is typically not necessary.
- □ If stains and scratches do occur, there are many things you can do as a consumer to remove them. Remove oil-based stains with acetone, mineral spirits, or ammonia. Organic stains like coffee, tea, or juice can be removed with hydrogen peroxide, and mixed with a few drops of ammonia.
- □ Water spots or rings are the most common problem with bath vanities and are caused by minerals left behind when water evaporates. These can be removed by buffing the spots gently with 00-gauge steel wool. Likewise, small nicks and scratches can often be removed in the same way. Larger scratches, chips, and resilient stains may require professional help. Please contact your local stonemason for details.
- □ Disclaimer: Natural Variations in Color and Pattern- Due to the natural characteristics of wood and stone, the veneer, finish, and countertop of this product may exhibit variations in color, grain pattern, and texture. These natural differences are inherent to the material and are not considered defects. Each piece is unique, and the appearance may vary slightly from the product images or from piece to piece. By purchasing this product, you acknowledge and accept these natural variations as part of the beauty and uniqueness of the product.

Care and Cleaning

- □ Liquid spills, such as alcohol, medications, etc should be cleaned up promptly. Some liquids with high-acid content can etch marble surfaces if left for any length of time. Popular products that should be promptly cleaned up are: shaving cream, toothpaste, perfume, cologne, nail polish remover, hair coloring and perm products, shampoo, drain opener, and toilet bowl cleaner.
- □ Place protective pads on the bottoms of any heavy objects, such as pottery, appliances, or other objects that may scratch the marble surface.
- □ Avoid abrasive cleaners or rough cleaning pads. If necessary, you can use a soft buffing pad.
- □ Use coasters under drinking glasses to prevent glass rings on the surface.
- □ Do not stand on the marble top to fix overhead lights or other items. Do not place extremely heavy items on the top.

Troubleshooting

Problem	Possible Cause	Correction
Surface or product is not level.	Floor is not level.	If this product has adjustable legs, adjust the legs until the surface is level.
Doors are not properly aligned.	Door hinges not adjusted properly.	Adjust the door hinges.

HOME DECORATORS COLLECTION®

Questions, problems, missing parts?
Before returning to the store, call Home Decorators Collection Customer Service
8 a.m. - 7 p.m., EST, Monday - Friday, 9 a.m. - 6 p.m., EST, Saturday

1-800-986-3460

HOMEDEPOT.COM/HOMEDECORATORS

Retain this manual for future use.

2025-02-17