GLACIER BAY®

1015196543 / 1015196551
25066-VS24-PDV / 25066-VS24-PCA

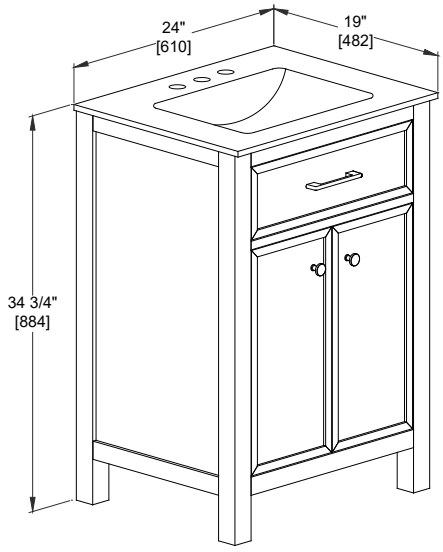


## Product Diagrams

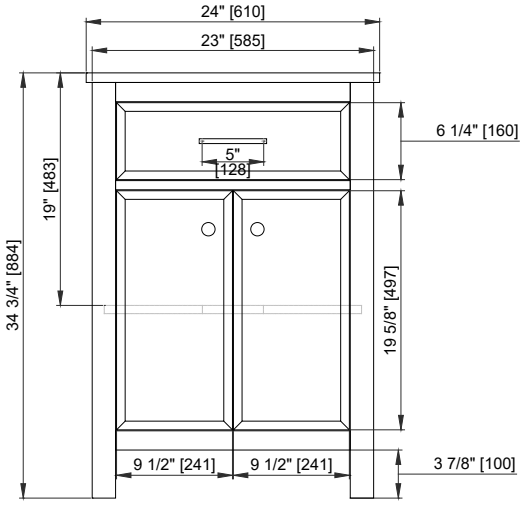


Front

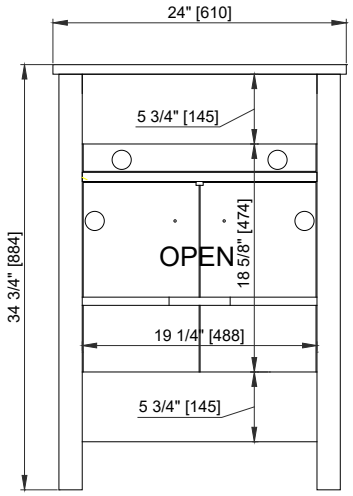


Back

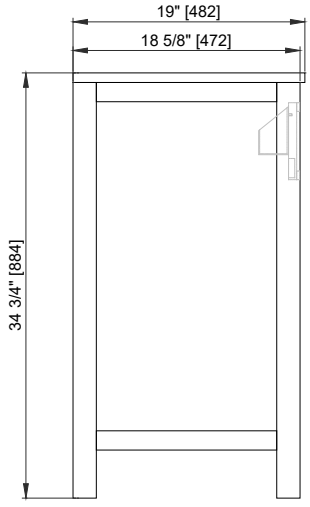


Side

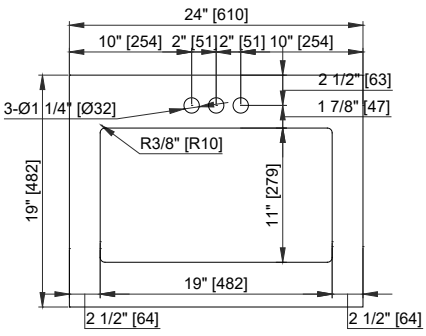


Top