ZEAFiVE

SCAN ME PRODUCT INSTRUCTION VIDEO

One-Piece Pedestal Sink DIMENSIONS

SKU NO. ZF-RPS263



626 494 0715 / 626-679-3588 service@bestgosupplychaininc.com

Features:

- Sleek, seamless design
- Glazed ceramic
- Integrated overflow
- Standard 1 3/4" drain hole

Installation:

-Wall-mounted/Countertop

Colors

- White

MODEL No. RPS263

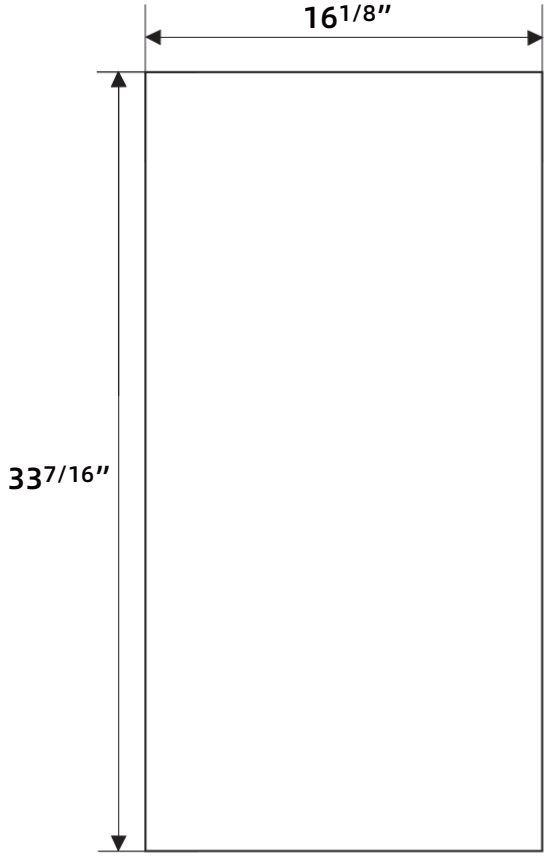

SIDE VIEW

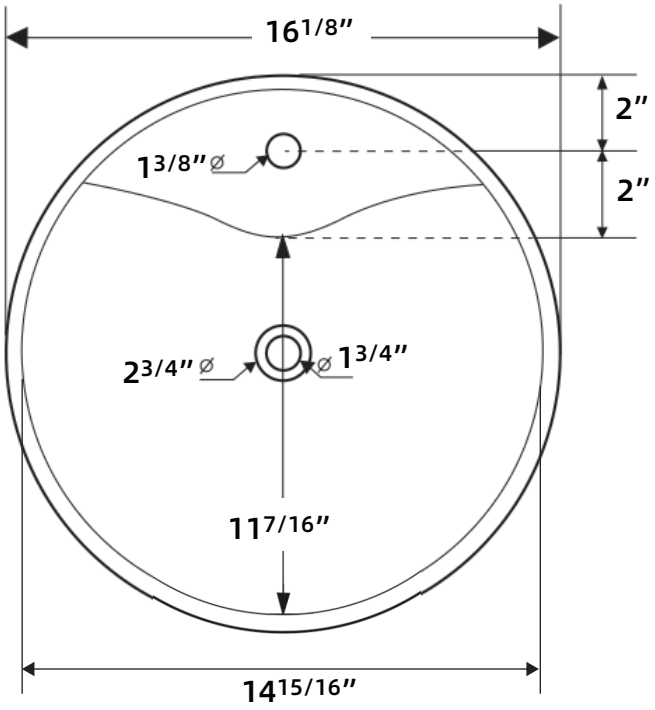

TOP VIEW

626 494 0715 / 626-679-3588 service@bestgosupplychaininc.com