Item #1007072202
Model #PWBRAB386351880

# HAMPTON BAY®

## USE AND CARE GUIDE

## ASSEMBLY MANUAL

# ENGINEERED WOOD WORKTOPS

Questions, problems, missing parts? Before returning to the store,
call Hampton Bay Customer Service
8 a.m. - 7 p.m., EST, Monday – Friday, 9 a.m. – 6 p.m., EST, Saturday

**1-855-HD-HAMPTON**

**HAMPTONBAY.COM**

***THANK YOU***

*We appreciate the trust and confidence you have placed in Hampton Bay through the purchase of this countertop. We strive to continually create quality products designed to enhance your home. Visit us online to see our full line of products available for your home improvement needs. Thank you for choosing Hampton Bay!*

# Table of Contents


**Safety Information** . . . . . 2
**Warranty** . . . . . 2
**Pre-Installation** . . . . . 3
Planning Installation . . . . . 3
Tools Required . . . . . 4
**Installer responsibilities** . . . . . 5
**Storage** . . . . . 5
**Installation** . . . . . 6
**Maintenance / Aftercare of your worktops** . . . . . 9


# Safety Information

Read and understand these instructions before installation of this countertop.

**Save these instructions for future reference.**

## MINNESOTA RESIDENTS

IMPORTANT HEALTH NOTICE.

SOME OF THE BUILDING MATERIALS USED IN THIS HOME (OR THESE BUILDING MATERIALS) EMIT FORMALDEHYDE. EYE, NOSE, AND THROAT IRRITATION, HEADACHE, NAUSEA AND A VARIETY OF ASTHMA-LIKE SYMPTOMS, INCLUDING SHORTNESS OF BREATH, HAVE BEEN REPORTED AS A RESULT OF FORMALDEHYDE EXPOSURE. ELDERLY PERSONS AND YOUNG CHILDREN, AS WELL AS ANYONE WITH A HISTORY OF ASTHMA, ALLERGIES, OR LUNG PROBLEMS, MAY BE AT GREATER RISK. RESEARCH IS CONTINUING ON THE POSSIBLE LONG-TERM EFFECTS OF EXPOSURE TO FORMALDEHYDE.

REDUCED VENTILATION MAY ALLOW FORMALDEHYDE AND OTHER CONTAMINANTS TO ACCUMULATE IN THE INDOOR AIR. HIGH INDOOR TEMPERATURES AND HUMIDITY RAISE FORMALDEHYDE LEVELS. WHEN A HOME IS TO BE LOCATED IN AREAS SUBJECT TO EXTREME SUMMER TEMPERATURES, AN AIR-CONDITIONING SYSTEM CAN BE USED TO CONTROL INDOOR TEMPERATURE LEVELS. OTHER MEANS OF CONTROLLED MECHANICAL VENTILATION CAN BE USED TO REDUCE LEVELS OF FORMALDEHYDE AND OTHER INDOOR AIR CONTAMINANTS.

IF YOU HAVE ANY QUESTIONS REGARDING THE HEALTH EFFECTS OF FORMALDEHYDE, CONSULT YOUR DOCTOR OR LOCAL HEALTH DEPARTMENT.

**WARNING: APPLY CAUTION WHEN USING POWER TOOLS.**

**WARNING: LEAVING HOT DISHES DIRECTLY ON THE COUNTERTOP MAY CAUSE PERMANENT DAMAGE.**

## CALIFORNIA RESIDENTS

**WARNING: THIS PRODUCT CAN EXPOSE YOU TO CHEMICALS INCLUDING FORMALDEHYDE (GAS), WHICH IS [ARE] KNOWN TO THE STATE OF CALIFORNIA TO CAUSE CANCER. FOR MORE INFORMATION GO TO WWW. P65WARNINGS.CA.GOV/PRODUCTS.**

**WARNING: DRILLING, SAWING, SANDING OR MACHINING WOOD PRODUCTS CAN EXPOSE YOU TO WOOD DUST, A SUBSTANCE KNOWN TO THE STATE OF CALIFORNIA TO CAUSE CANCER. AVOID INHALING WOOD DUST OR USE A DUST MASK OR OTHER SAFEGUARDS FOR PERSONAL PROTECTION. FOR MORE INFORMATION GO TO: www.P65Warnings.ca.gov/wood**

# Warranty

Contact the Customer Service Team at 1-855-HD-HAMPTON or visit www.HAMPTONBAY.com.

# Pre-Installation

## PLANNING INSTALLATION

Report any defects noticed immediately after unpacking the product prior to installation. Ensure the countertop is installed and finished (using oil, oil-wax, varnish) before use. Follow the instructions contained in this manual to keep the warranty valid.

**NOTE:** Immediately after unpacking, the countertop must be finished on both sides and all edges. It is very important to properly coat the countertop with a high quality oil. Finish the counter top surface with particular regard to all cutting edges and end edges, strictly to the manufacturers' specifications concerning the oil, wax oil, or varnish.

Keep the countertop flat in a fully supported position, away from direct heat and moisture and in the original packaging. This helps to avoid excessive sanding and wood warpage.

Storing the countertop upright or on its edge, in conjunction with heat or moisture, can result in the countertop warping.

**WARNING:** Wooden countertops should be used in an ambient temperature of 32°F - 75°F (18°C - 24°C) and humidity of 40-60 %.

The following features are completely natural for wood:

- ☐ Differences in color, grain, and will have some small knots.
- ☐ Wood darkens with time.
- ☐ Wood is splash proof but not waterproof and wood fibres may raise if they are exposed to water for a long time.
- ☐ Wood absorbs moisture from the environment and gives it back, which can cause a change in its volume.

## TO AVOID CRACKING AND SPLITTING OF WOOD:

- ☐ The installation must allow the wood to move (expand/contract):
  - ☐ Do not glue the countertop down.
  - ☐ Keep a 1/8 in. gap at the wall.
  - ☐ Holes in the brackets or blocks must be oversized to allow the fastener to keep the top secure but allow the top to move.
  - ☐ Use a flexible sealant to secure your sink.
- ☐ Protecting the underside is as important as protecting the top.
  - ☐ Seal the underside of the top with a water-resistant sealant.
  - ☐ Additional protection may be required above dishwashers.
- ☐ Protect wood-to-wood joints.
  - ☐ Seal edges with a water-resistant sealant prior to connecting the joints.
  - ☐ Use mechanical fasteners to pull and hold joints together.

## TOOLS REQUIRED

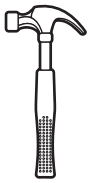
Claw hammer

Safety goggles

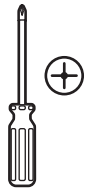
Phillips screwdriver

Level

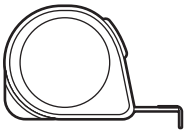
Tape measure

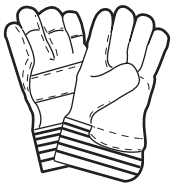
Gloves

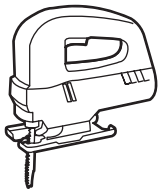
Jigsaw

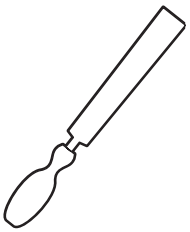
File

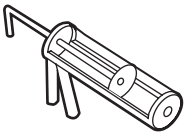
Caulk gun

Orbital sander

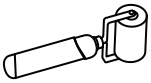
Laminate roller

Circular saw

## INSTALLER RESPONSIBILITIES

Before installing the countertop, please read this manual carefully, make sure that you understand all the information contained in it and keep it for future. Any defects noticed immediately after unpacking the product should be reported before installation.

When in doubt please contact the Hampton bay CS

All worktops are supplied pre finished. Upon unwrapping it is important to inspect the worktop carefully for any damage or defects of any kind. As wood is a natural material its color and shade will vary so ensure your worktop/s are visually acceptable in all respects before installation.

Before commencing the installation of your worktops you, and or, your installer should read and fully understand these instructions. If in doubt please contact Hampton bay CS for advice before you undertake any work on the worktop.
Failure to adhere to these instructions may void product warranty.

## STORAGE

Wood is a natural material and can be affected by unsuitable and varying temperature and humidity. Worktops MUST be stored flat and be fully supported along their length at all times and be kept in their original packaging and away from a direct heat source, i.e. a radiator.
Never store vertically or on edge, as this will induce bowing.

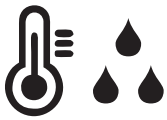

The worktops must be stored in a dry environment with room atmospheric conditions being 35 - 55% Relative Humidity and temperature range of 32°F - 75°F (18°C - 24°C).

# Installation

To assist with a trouble free installation ensure you have all the correct accessories required to do so.

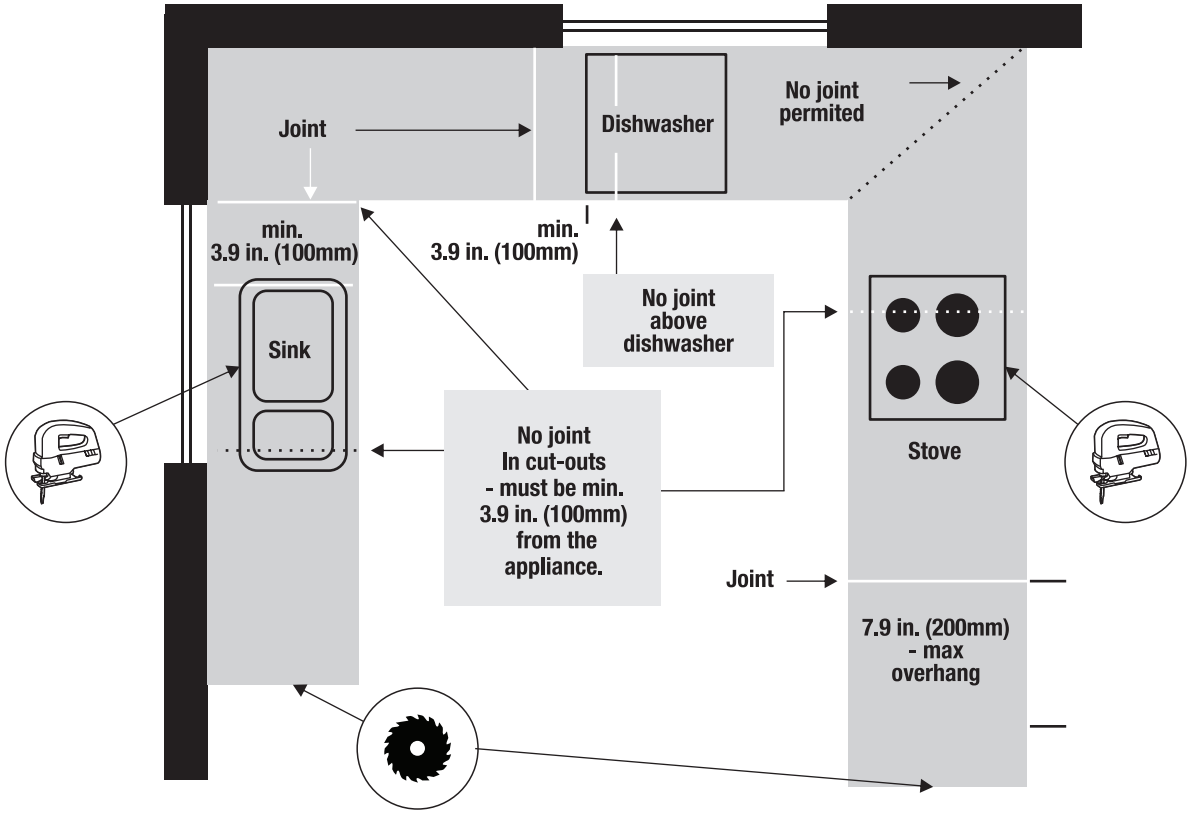


Allow a 0.16 in. (4mm) gap between the back edge of the worktop and the wall as this will allow the worktop to expand and contract within the humidity of the kitchen. We advise that an backsplash is used to cover the gap. Fix the backsplash to the wall and not the worktop.
A flexible silicone seal should be used between the backsplash and the worktop.

Make sure to follow the manufacturers templates and guides on size of the opening.

# Installation (continued)

- ☐ No cut outs for sinks, stoves, etc.., should be nearer than 3.9 in. (100mm) from the end of the worktop or between cut outs, as this will seriously weaken the worktop.

- ☐ When a worktop is to be fitted near to a constant heat source, allow a minimum gap of 1.6 in. (40mm) between the ends of the worktop and the heat source unit.

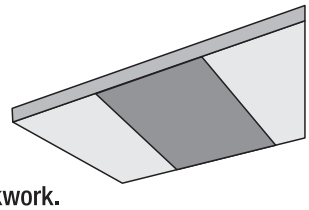

- ☐ If a kitchen appliance (dishwasher, washing machine, refrigerator, etc…) is to be installed under the worktop, cover the exposed underside of the worktop above the appliance with a sheet of moisture barrier building paper using wood glue to adhere it to the underside of the worktop. This will help to protect the worktop from any intense heat or moisture that radiates from these types of appliances, particularly dishwashers. Use the same procedure for installations when you are fixing to brickwork.

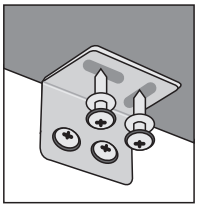

- ☐ Only use slotted angle brackets, with the slots running horizontally across the width of the worktop, to secure the worktop to the carcass, this will allow natural lateral movement. Always use flat washers with the screws to fix.

- ☐ If a cabinet has a solid top or you can only secure through the cross-rail it is important to drill an oversized hole (8-10mm) through the top of the cabinet and secure to the worktop using a larger flat washer and screw. This will allow the work surface to slide over the washer in case of any possible expansion or contraction of the worktops. (Do not screw through the cabinet directly into the worktop without oversize holes).

- ☐ It is important that 3 slotted angle brackets are used across the width at regular intervals along the length of the worktop, especially at the end of a worktop run.

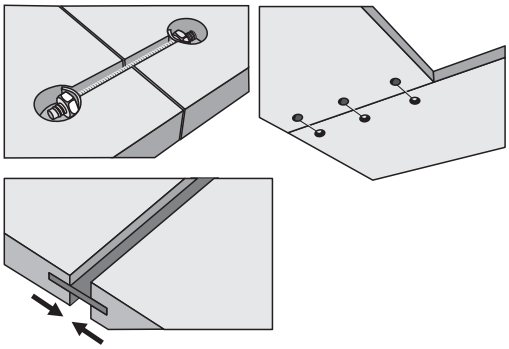

- ☐ When joining two worktops together three standard worktop bolts must be used on each joint. The additional use of biscuit joints is also recommended.

- ☐ It is not recommended that a engineered wood worktop be installed without supporting cabinets, i.e. a peninsular breakfast bar with support leg. If this is to be used an adequate cross bracing framework must be used supporting the full underside of the worktop.

- ☐ Do not fit under mounted or Apron sinks with engineered worktops.

- ☐ If you require to apply the edging strips supplied please follow the following:

  - ☐ All edging is supplied pre glued
  - ☐ Apply edging to pre cut edges using pressure (maybe easier to apply with a wooden block)
  - ☐ Trim off any excess carefully
  - ☐ Sand with 220 grit to soften the edge and apply oil to the sanded edge

**Replacement edge banding is provided for cut edges that will be visible after assembly**

1

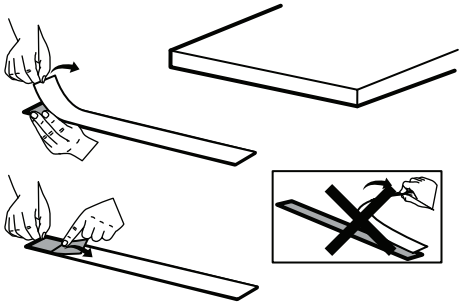

2

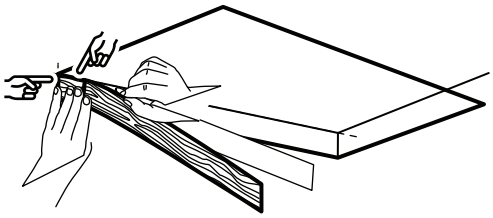

3

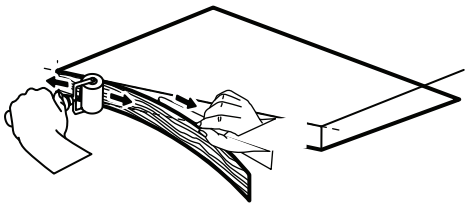

4

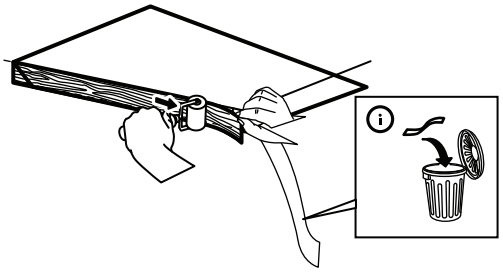

5

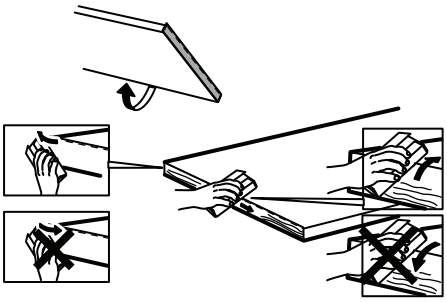

6

MINERAL OIL
OR MINERAL
OIL+WAX

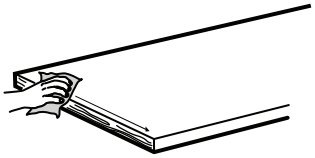

**OR**

POLYURETHANE OR STAIN
+ POLYURETHANE

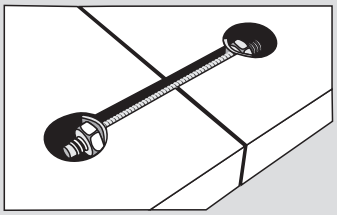

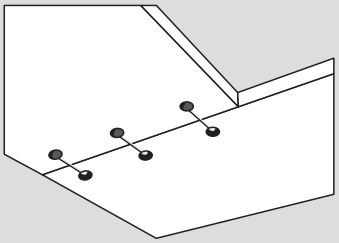

**NOTE:**
**Joining the countertops with each other does not require gluing the tape for edges.**

# Installation (continued)

## Cutting Countertop to Size

- ☐ Use a circular saw with a fine tooth blade to make straight cuts and minimize chipping the edge.
- ☐ Clamp a straight edge (1) to the top as a guide for your circular saw to achieve a straight cut, especially when two cut edges will be joined together to avoid any gaps.

**NOTE:** Use a carpenter's square to make sure your guide is aligned properly.

**NOTE:** Make sure to account for your blade offset when setting.

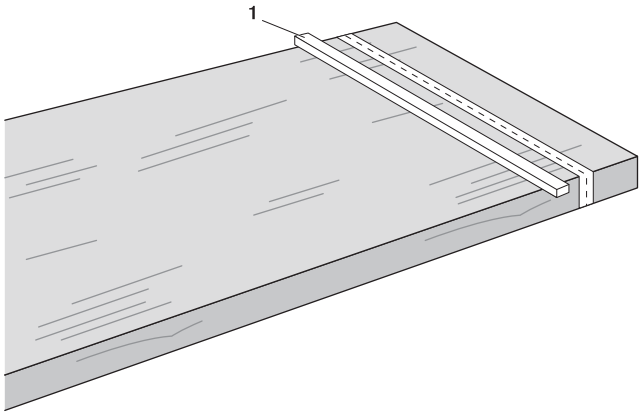


## Cutting Hole for Sink, Cooktop, etc.

- ☐ Mark with removable tape the outline of the cutout.
- ☐ Drill a pilot hole to get jigsaw blade started.
- ☐ Additional holes in all corners may be needed if all corners require tight radii.
- ☐ Cut two of the edges first, then attach a brace (2) on that end to keep cutout from falling through when cut is complete.

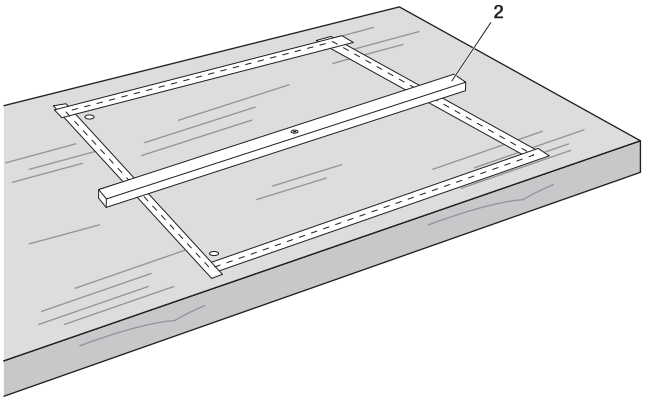


# MAINTENANCE / AFTERCARE OF YOUR WORKTOPS

Please remember that wood is a natural material and an appropriate on going regime of oil treatment is essential to maintain the factory pre finished surface protection against stains and humidity, which will ensure a long and trouble free life.

If you need to restore the sheen of the tops in the future when you feel they start to look a little dull, or for precaution every 6 months, a further coat of mineral oil will return them to their natural beauty. The surfaces can be cleaned with damp cloth containing a small amount of mild dishwashing soap.

Keep all oils out of reach of Children Ensure good ventilation within the room when applying oils.

HAMPTON BAY®

Questions, problems, missing parts? Before returning to the store,
call Hampton Bay Customer Service
8 a.m. – 7 p.m., EST, Monday – Friday, 9 a.m. – 6 p.m., EST, Saturday

**1-855-HD-HAMPTON**

**HAMPTONBAY.COM**

Retain this manual for future use.