# SB-2723

SPEAKMAN®

Vector® Widespread Faucet

## FEATURES:

- 1.2 GPM (4.5 L/min) flow rate
- Brass construction
- Cross handles
- 1/4 turn ceramic cartridges
- Stainless steel inlet supply lines included, with 3/8" compression fittings
- Corrosion resistant finishes
- Coordinates with Vector Collection

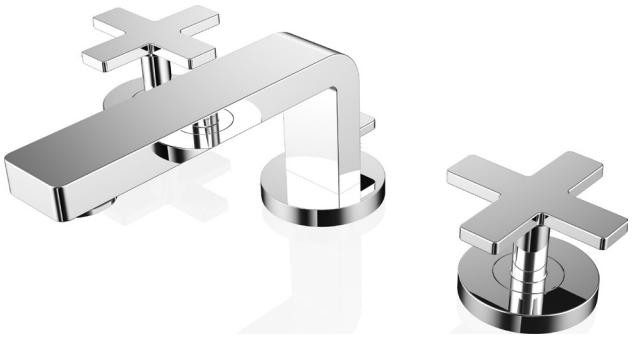

## STOCK FINISHES:

PC MB

## SPECIALTY FINISHES:

PB PN

## STANDARDS:

- ASME A112.18.1/CSA B125.1 certified
- NSF/ANSI 61 certified
- NSF 372 certified
- WaterSense certified

## WARRANTY:

*Visit www.speakman.com for full product warranty information*

- 5 Year Limited Warranty (commercial)
- Limited Lifetime Warranty (residential)

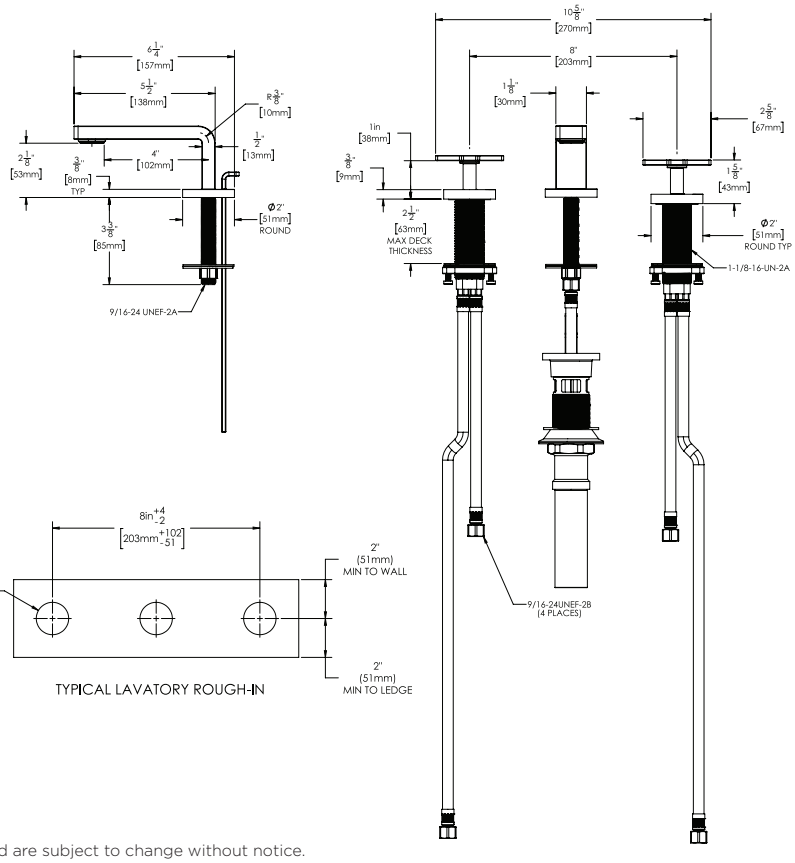


1. All dimensions are in inches (millimeters) unless otherwise specified and are subject to change without notice.

Architect/Engineer Approval Space:


SPEAKMAN
400 ANCHOR MILL ROAD
NEW CASTLE, DE 19720

**P:** 800-537-2107
**F:** 800-977-2747
**W:** WWW.SPEAKMAN.COM
**R:** 01-AUGUST 2018