USE AND CARE GUIDE

COASTER FINE FURNITURE | coasterfurniture.com

Product	Retro 5-Piece Round White and Red Wood Top Dining Room (Set Seats-4)
Model / SKU	2388-S5R (Home Depot Internet # 331484480)
Finish	White / Red
Dimensions	Dining Table: 42 in. Dia. x 30 in. H; Side Chair: 17 in. W x 21.25 in. D x 32.5 in. H
Materials	Paper laminate veneer, engineered wood (MDF), metal and foam

Customer Service

Warranty claims, missing, damaged or defective parts, or assembly help	Contact Coaster: email **ecomm06@coasteramer.com** or call **(888) 710-5274**. Where the assembly instructions say to contact the store, contact Coaster instead. Have your model number (2388-S5R) and proof of purchase ready.
Returns and refunds	Contact The Home Depot, where you purchased this item.

Assembly and Safety

- Assembly instructions follow on the next pages. Check that all parts and hardware are present before you start.

Care and Cleaning

- Vacuum upholstered parts regularly with a soft brush attachment to remove dust and grit.
- Blot spills right away with a clean, dry, white cloth. Do not rub.
- Upholstery cleaning code S: spot clean only with a water-free, solvent-based (dry-cleaning) upholstery cleaner, in a well-ventilated room away from open flames. Do not use water on the upholstery. Test on a hidden area first.
- Dust wood parts with a soft, dry, lint-free cloth, following the grain. Do not use abrasive cleaners, ammonia, solvents or silicone polishes on wood parts.
- Wipe metal parts with a soft cloth dampened with mild soap and water, then dry them right away. Do not use abrasive pads or cleaners, which can scratch the finish.
- Keep out of direct sunlight and away from heaters, fireplaces and air vents. Sudden changes in heat or humidity can affect wood and finishes.
- To move it, lift it; do not drag it.

Limited Warranty

- Coaster warrants this product to be free from manufacturing defects in workmanship and materials for one (1) year from the date of purchase.
- Covers residential use only. Industrial, commercial, institutional and rental use are not covered.
- Does not cover color variations, size discrepancies, normal softening of foam, pillows, normal wear or buyer’s remorse.
- Void if damage results from improper use or maintenance, unauthorized modifications, assembly not done according to the instructions, moving the item after delivery, accidents or abuse.
- To make a warranty claim, email Coaster at ecomm06@coasteramer.com or call (888) 710-5274 with your model number and proof of purchase.
- This warranty gives you specific legal rights, and you may also have other rights which vary from state to state.

ASSEMBLY INSTRUCTIONS
COASTER FINE FURNITURE



Fine Furniture for every stage of life

2388
DINING TABLE

REVISION 0 : 05/20/2018
REVISION 1 : 07/26/2019
REVISION 2 : 08/25/2022

ITEM:**2388**

ASSEMBLY INSTRUCTIONS

ASSEMBLY TIPS:

1. Remove hardware from box and sort by size.
2. Please check to see that all hardware and parts are present prior to start of assembly.
3. Please follow attached instructions in the same sequence as numbered to assure fast & easy assembly.

WARNING!

1. Don't attempt to repair or modify parts that are broken or defective. Please contact the store immediately.
2. This product is for home use only and not intended for commercial establishments.

ASSEMBLY TIME	10 MINUTES

PARTS IDENTIFICATION

A	**LEG**	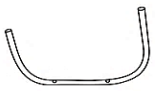	**4PCS**
B	**TABLE TOP**	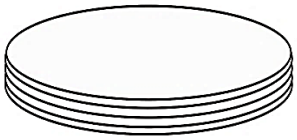	**1PCS**

HARDWARE IDENTIFICATION

1	**BOLT (1/4" x 38mm)**	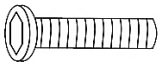	**12PCS**
2	**JUNCTION PIECE**		**2PCS**
3	**END CAP (1-1/4")**		**10PCS**
4	**LEVELER (1/4")**		**4PCS**
5	**WRENCH (4mm)**		**1PC**

ITEM:**2388**

ASSEMBLY INSTRUCTIONS

STEP 1

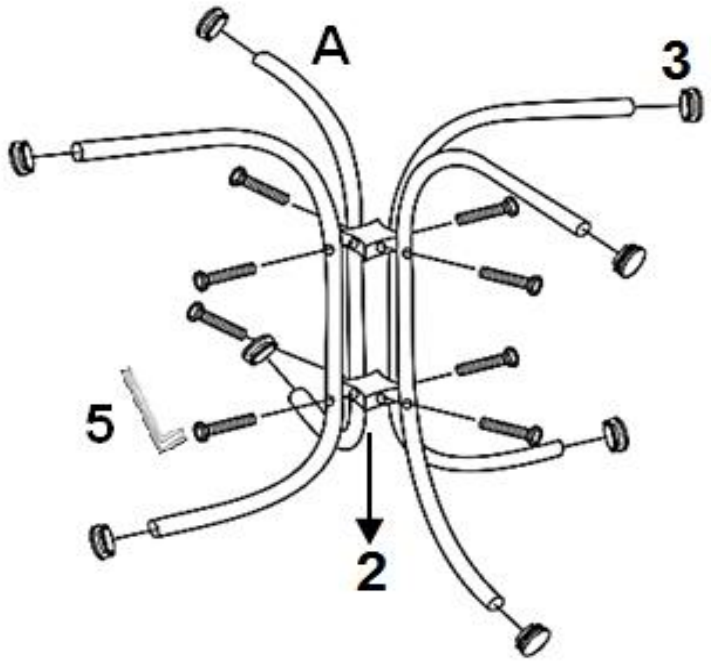

STEP 2

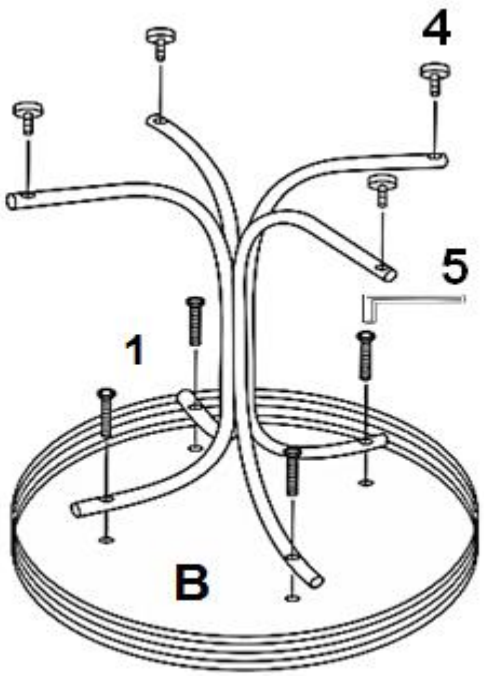

ITEM:**2388**

COASTER FINE FURNITURE

ASSEMBLY INSTRUCTIONS

STEP 3

COMPLETE



ITEM:**2388**

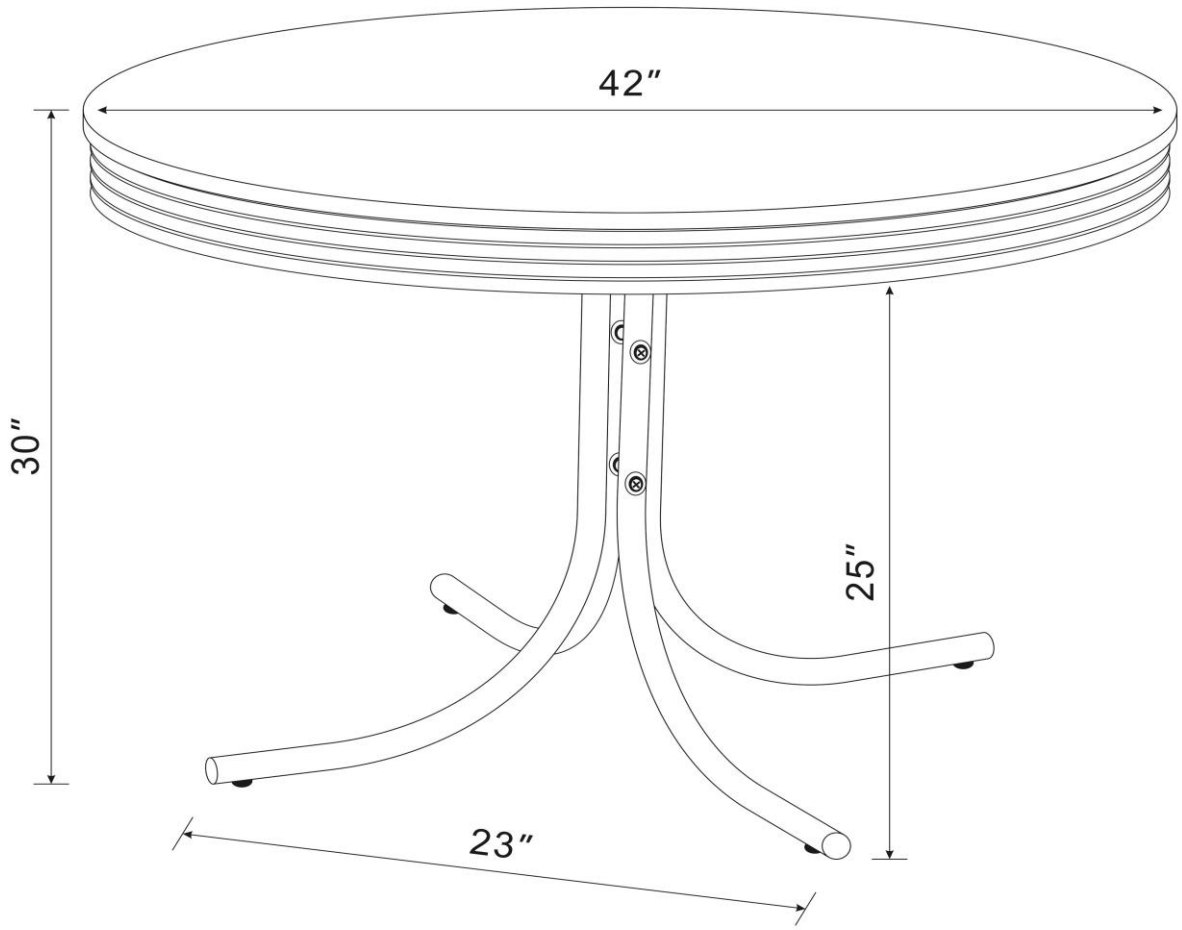

Note : Dimension tolerance ±5%

ASSEMBLY INSTRUCTIONS
COASTER FINE FURNITURE



Fine Furniture for every stage of life

2450R
SIDE CHAIR

REVISION 0 : 05/20/2018
REVISION 1 : 07/29/2019
REVISION 2 : 07/23/2020
REVISION 3 : 08/25/2022
REVISION 4 : 03/13/2023
REVISION 5 : 11/15/2023
REVISION 6 : 07/05/2024
REVISION 7 : 07/23/2025

ITEM: **2450R**

ASSEMBLY INSTRUCTIONS

ASSEMBLY TIPS:

1. Remove hardware from box and sort by size.
2. Please check to see that all hardware and parts are present prior to start of assembly.
3. Please follow attached instructions in the same sequence as numbered to assure fast & easy assembly.

WARNING!

1. Don't attempt to repair or modify parts that are broken or defective. Please contact the store immediately.
2. This product is for home use only and not intended for commercial establishments.

ASSEMBLY TIME	10 MINUTES

PARTS IDENTIFICATION

A	FRONT LEFT LEG FRAME	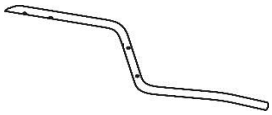	1 PC
B	FRONT RIGHT LEG FRAME		1 PC
C	BACK LEG FRAME	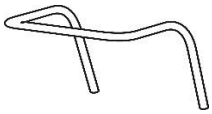	1 PC
D	BACK CUSHION	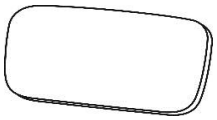	1 PC
E	SEAT CUSHION		1 PC

Z HARDWARE IDENTIFICATION

1	BOLT (1/4" x 41mm)		8 PCS
2	SCREW (8# x 38mm)		4 PCS
3	CAP (1")		4 PCS
4	ALLEN WRENCH (4mm)		1 PC

NOTE:

QUANTITIES SHOWN ARE FOR ONE CHAIR

Phillips head screw driver is required in the assembly process; however,manufacturer does not provide this item.

ITEM: **2450R**

ASSEMBLY INSTRUCTIONS

STEP 1

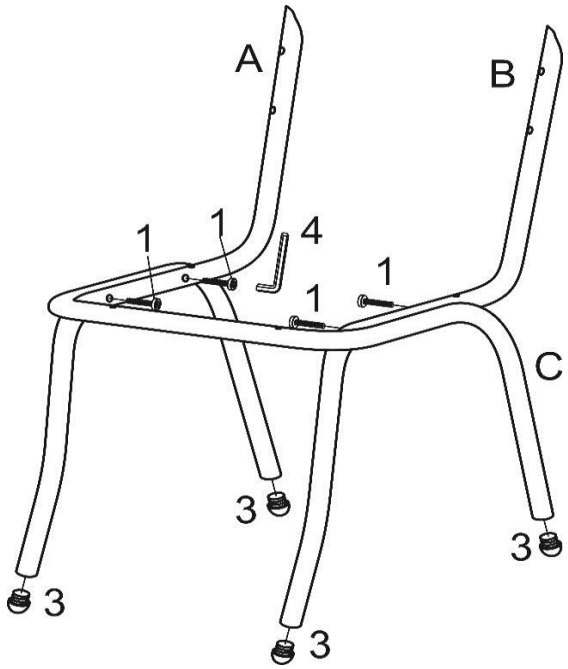

STEP 2

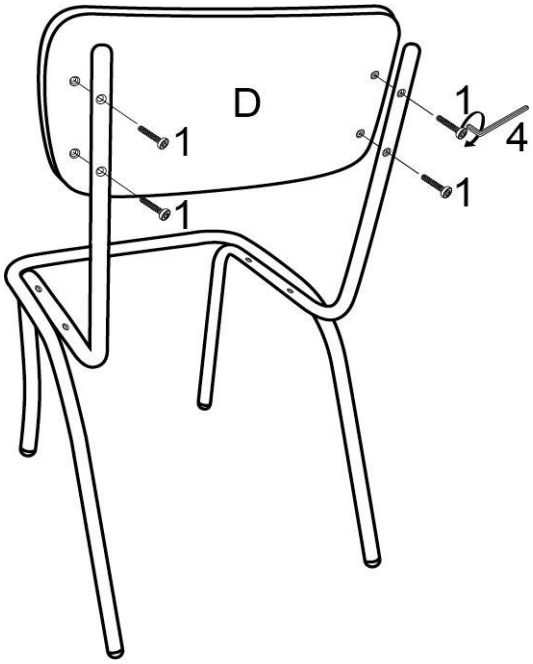

STEP 3

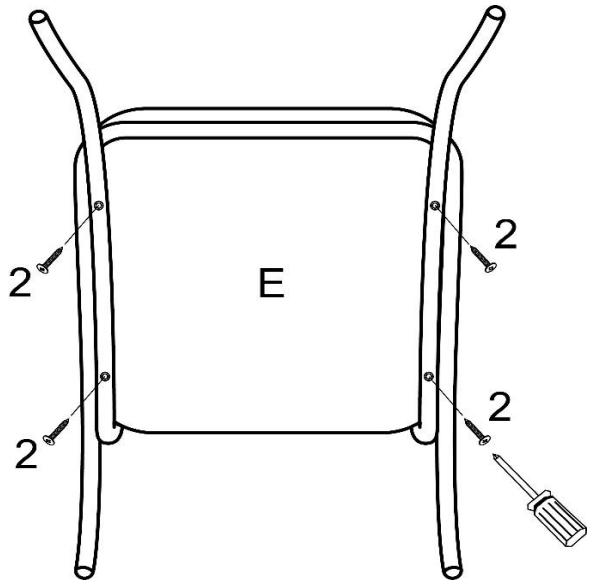

STEP 4

COMPLETE

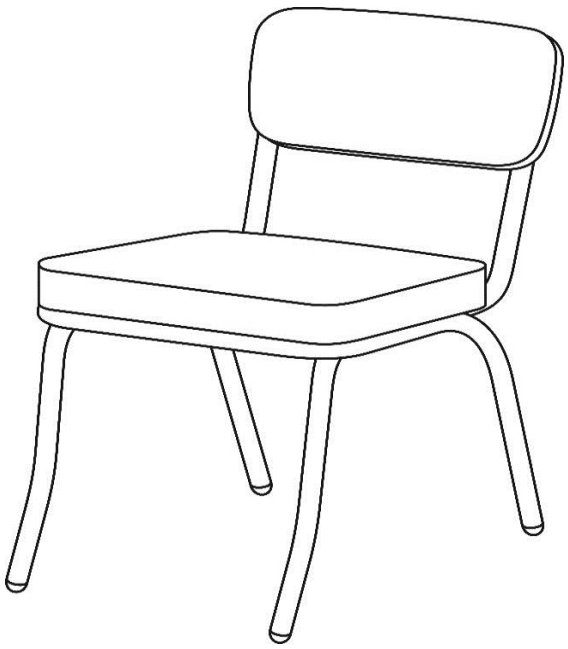

ITEM: **2450R**

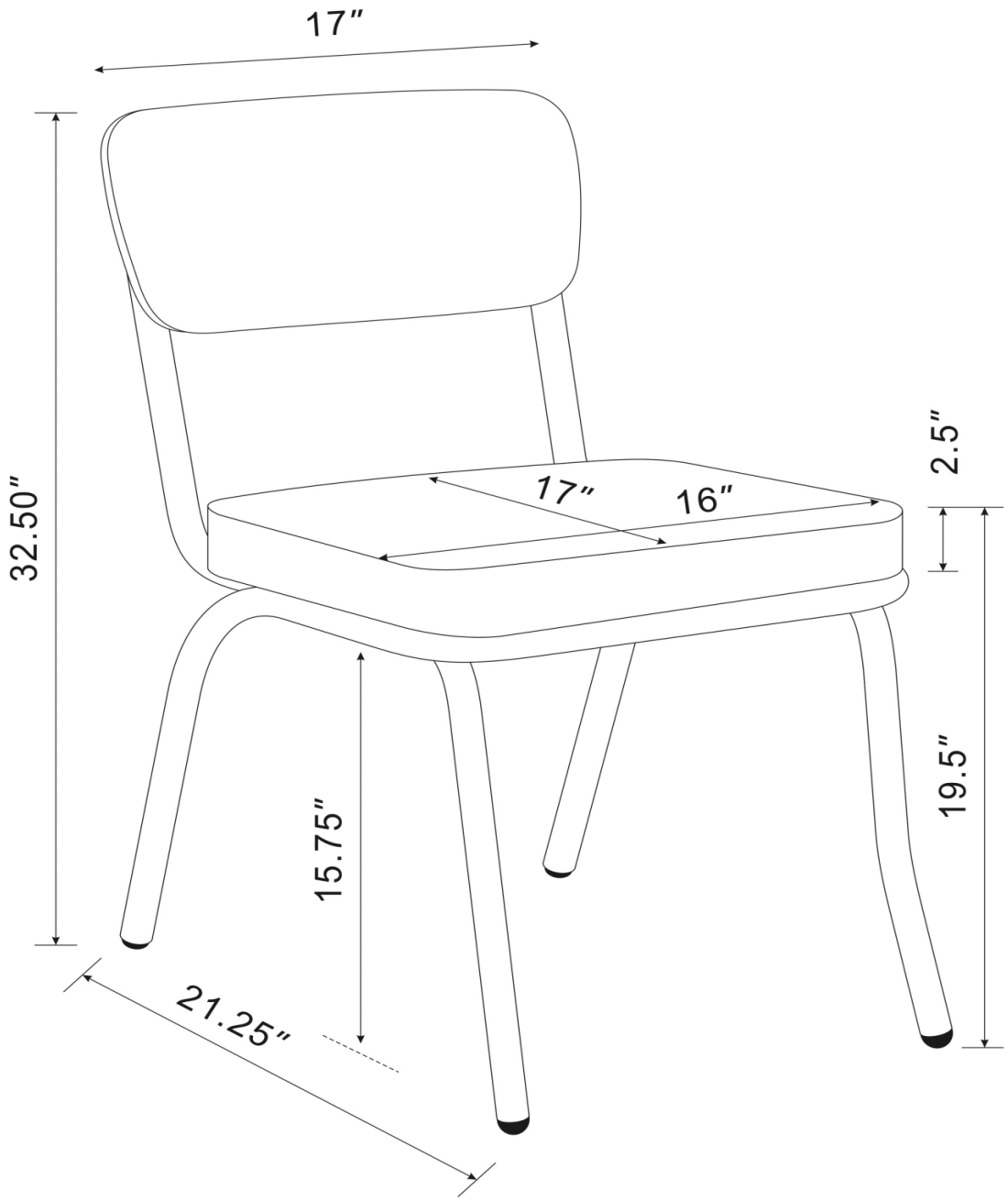

Note : Dimension tolerance ±5%