ASSEMBLY INSTRUCTIONS

SOFA

Legs & hardware are stored at the bottom of box, please take out for assembly.

Note:Do not use power tools for assembly. Power tools increase the risk of over tightening which lead to soliting or cracking the wood.

Component List

NO	Drawing	Qty	Description
A	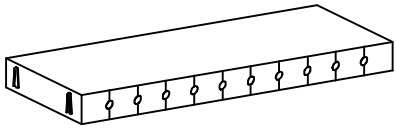	1	SEAT FRAME
B	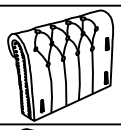	1	LSF ARM
C	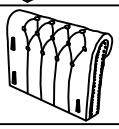	1	RSF ARM
D	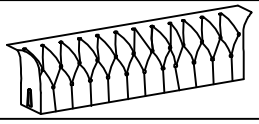	1	BACK
E	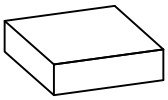	3	SEAT CUSHION
F		4	WOODEN LEG ϕ90*100MM
G	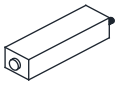	1	WOODEN LEG 30*30*90MM

Seat cushions are packed inside the seat, please release the dust cover Velcro to take out for assembly.

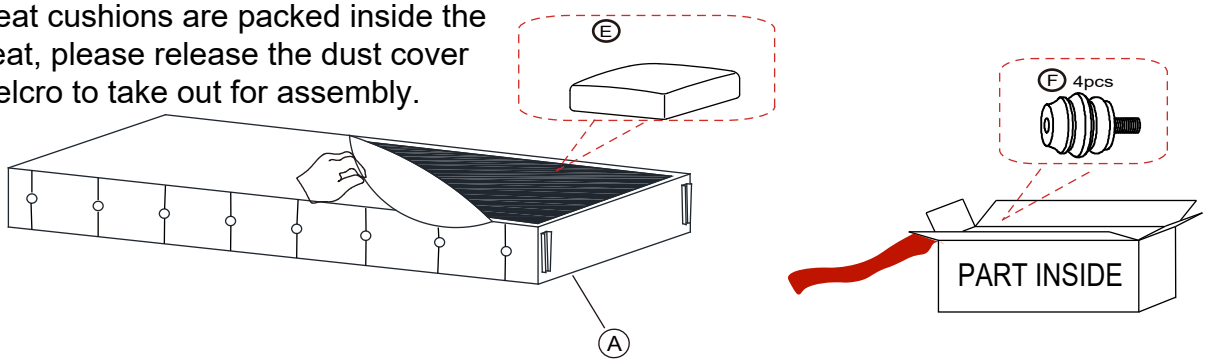

Step#1

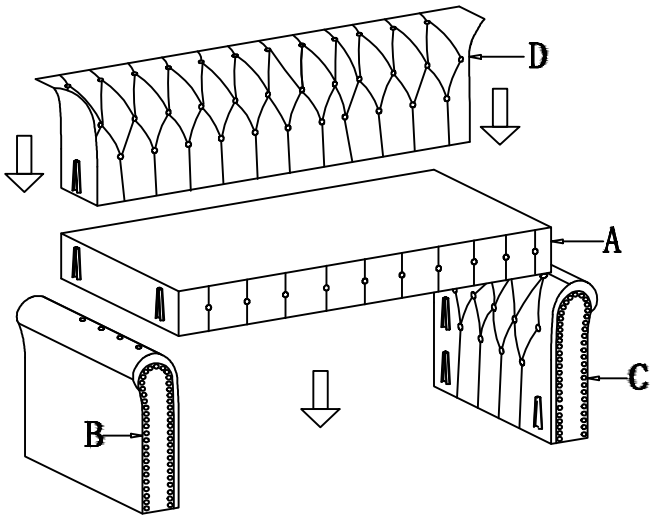

Step#2

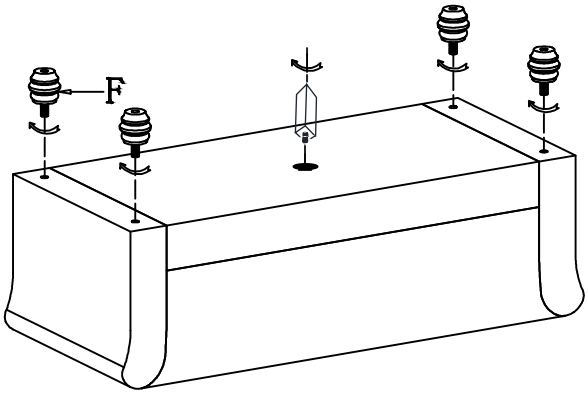

Step#1

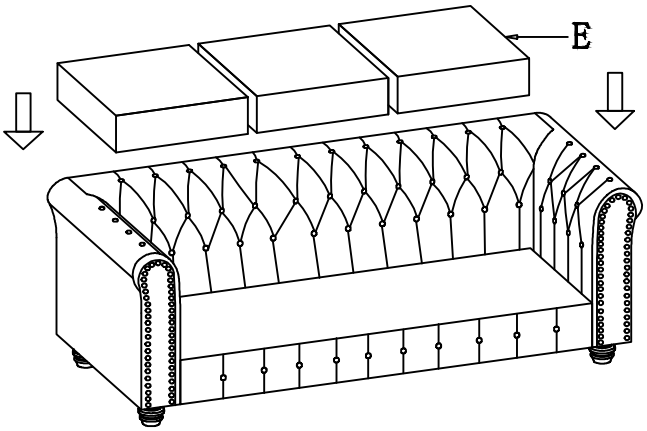

Step#2

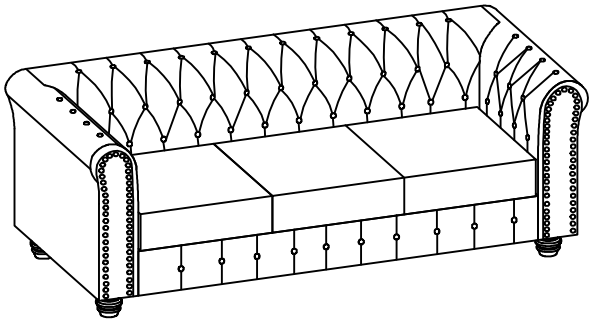

Care Instruction for textured velvet Furniture:
In order to maintain the original appearance of your textured velvet Furniture, please follow below simple care procedures:

.Avoid exposing furniture directly to sunlight or heating and air conditioning outlets.Sunlight and or exposure to heating and air conditioning outlets will fade/damage textured velvet.

.Do not place your upholstered furniture too close to windows, radiators,or vents,and be sure to use windows,radiators,or vents.

.Vacuum or wipe with a cloth regularly to remove dust.

For items use on wooden floor,hard surfaces or carpets,it is recommended to install protective pads under all legs and supports to avoid/prevent from damages/scratches and discoloration.