RYOBI
Cordless Power Head
Manufacturing Number 313238001
Item Number RY40003
Repair Sheet

TECHTRONIC INDUSTRIES POWER EQUIPMENT
P.O. Box 1288, Anderson, SC 29622
Phone 1-800-860-4050
www.ryobitools.com

RYOBI CORDLESS POWER HEAD – ITEM NUMBER RY40003

FIGURE A

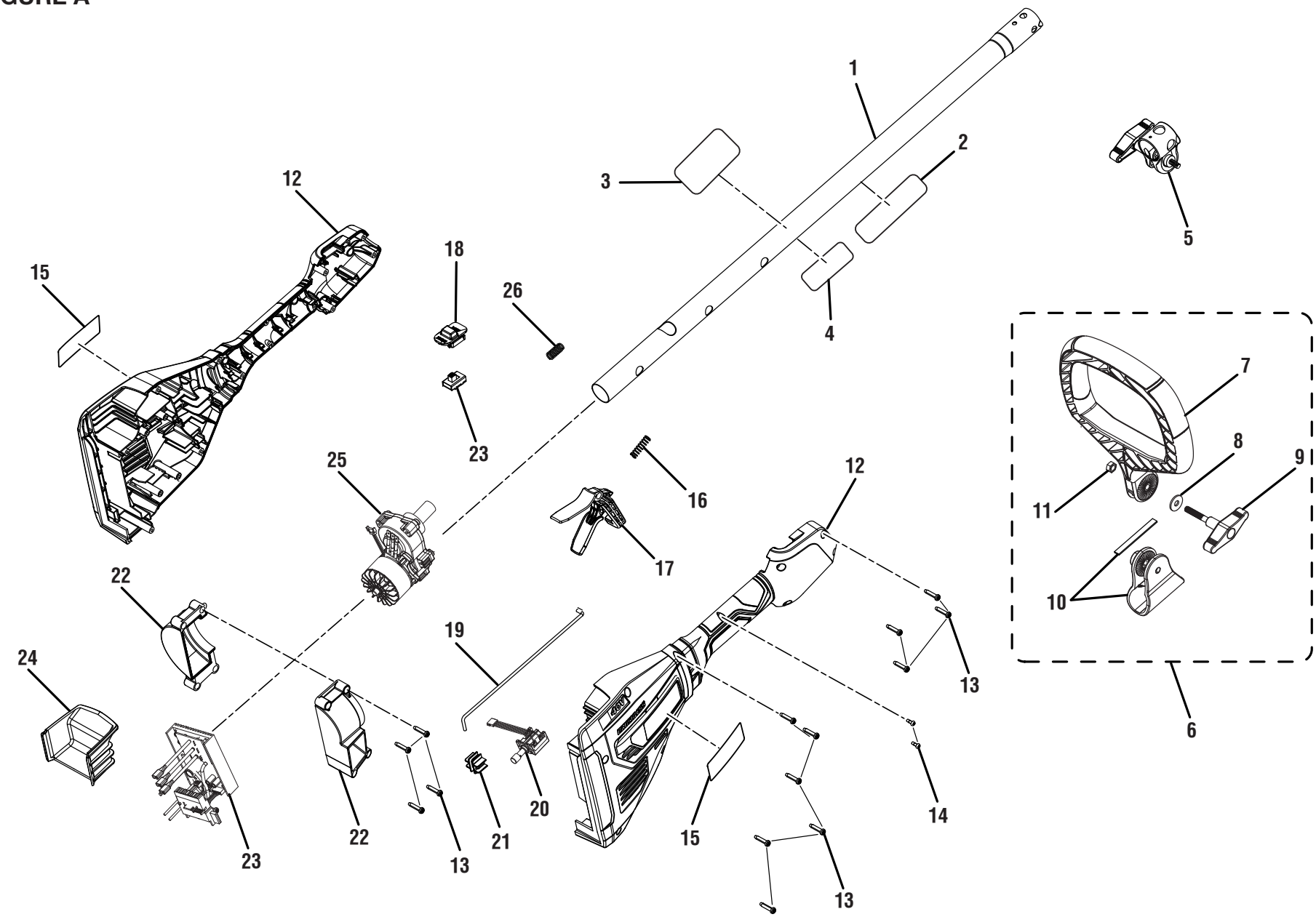

RYOBI CORDLESS POWER HEAD – ITEM NUMBER RY40003

The model number will be found on a label attached to the upper boom. Always mention the model number in all correspondence regarding your **STRING TRIMMER** or when ordering replacement parts.

PARTS LIST – FIGURE A

KEY NO.	PART NUMBER	DESCRIPTION	QTY
1	313455001	Upper Boom Assembly (Inc. Key Nos. 2-4)	1
2	941013005	Warning Label (French/Spanish)	1
3	941013004	Warning Icon Label	1
4	941588210	Data Label	1
5	313454001	Boom Clamp Assembly	1
6	313554001	Front Handle Assembly (Inc. Key Nos. 7-11)	1
7	523409001	Front Handle	1
8	678587003	Washer (ID6.4 x OD18 x 1.6t)	1
9	313559001	Knob Assembly	1
10	313587001	Auxiliary Handle Bracket Assembly	1
11	680196006	Hex Nut (M6)	1
12	313242002	Rear Handle Assembly (Inc. Key No. 15)	1
13	661864007	Screw (M4 x 18 mm, T15 Torx Pan Hd.).	14
14	660203052	Screw (M3 x 8 mm, Pan. Hd.)	2
15	940705393	Logo Label	2
16	695180001	Compression Spring (Trigger Lock)	1
17	313687001	Switch Trigger Assembly w/Lock-Out	1
18	534157001	Slide Switch Cover	1
19	639787001	Rod	1
20	760952002	Variable Speed Switch	1
21	534149001	Switch Cap	1
22	313350001	Motor Volute Assembly	1
23	313240001	Electric Controller & Switch Assembly	1
24	534155001	Bucket Housing	1
25	313244001	Motor and Gear Box Assembly	1
26	690140011	Compression Spring	1
	Not Shown		
	995000324	Operator's Manual	
	1-8-20 (Rev:04)		

*** Standard Hardware Item – May Be Purchased Locally at The Home Depot**

RYOBI CORDLESS POWER HEAD – ITEM NUMBER RY40003

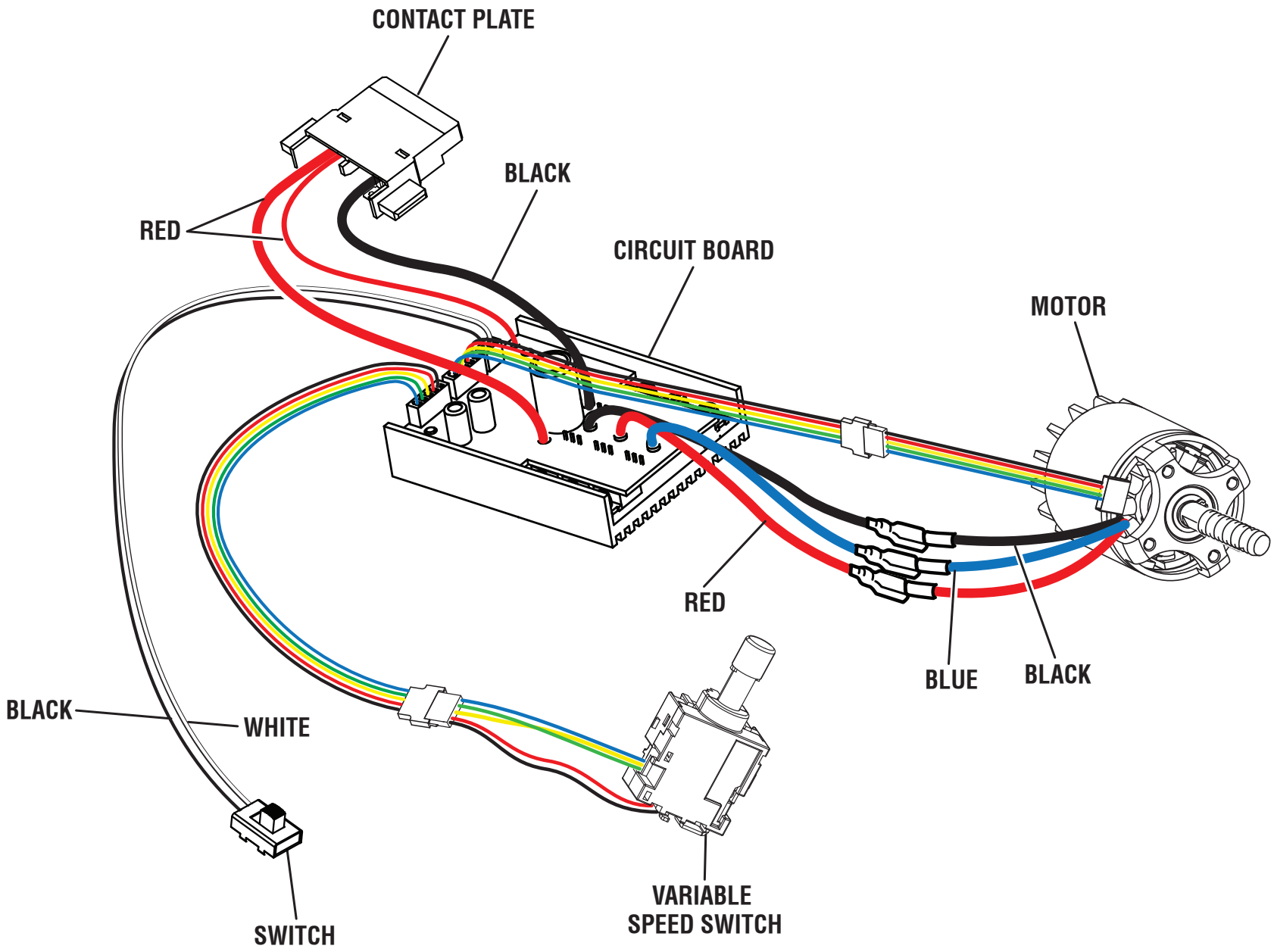

WIRING DIAGRAM

RYOBI

Straight Shaft Trimmer Attachment with 3-in-1 Trimmer Head Accessories

Model Nos. RY15526, RY15526VNM

Mfg Nos. 311247005, 311247101

Repair Sheet

TECHTRONIC INDUSTRIES POWER EQUIPMENT
P.O. Box 1288, Anderson, SC 29622 USA
1-800-860-4050 • www.ryobitools.com

RY15526, RY15526VNM TRIMMER ATTACHMENT

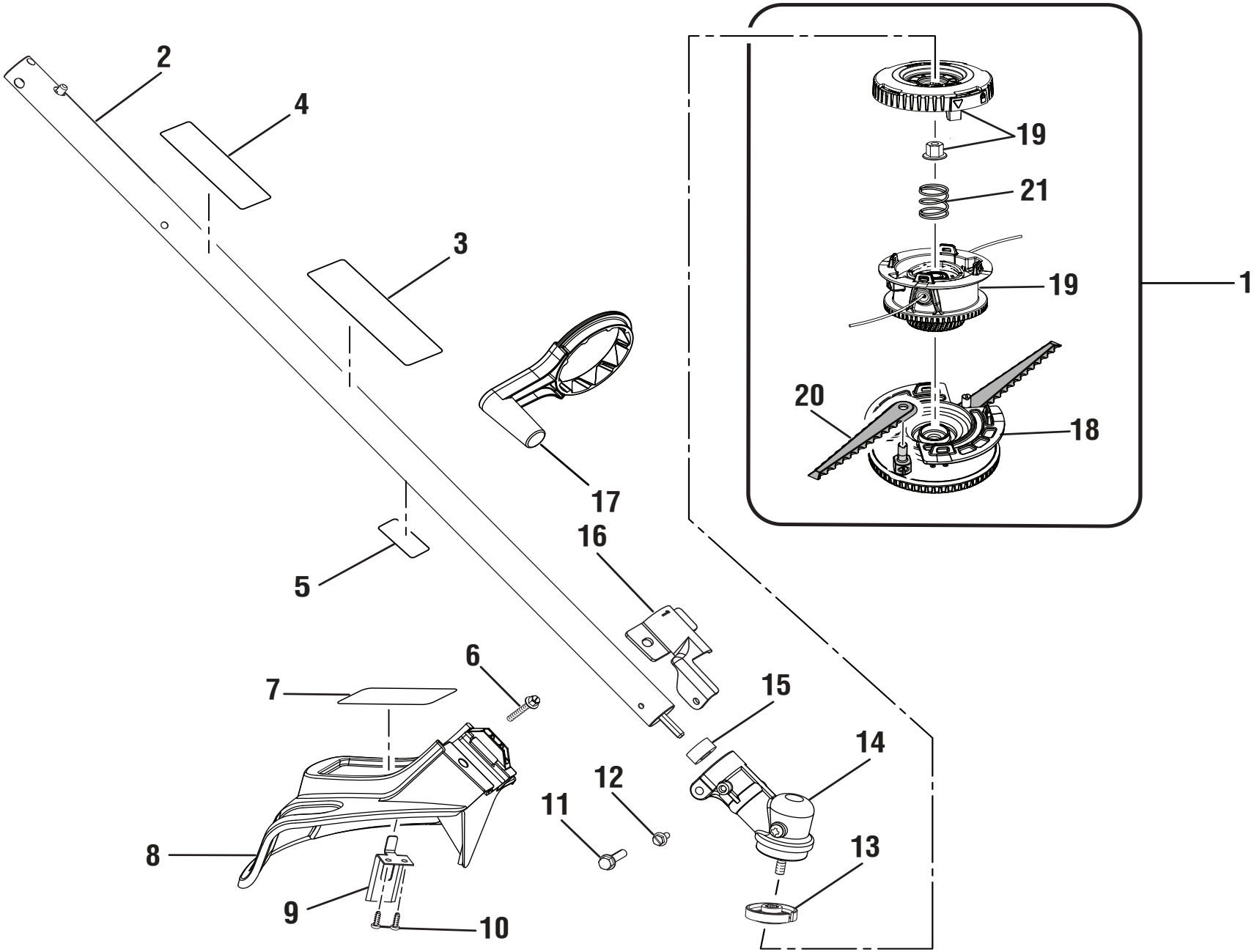

RY15526, RY15526VNM TRIMMER ATTACHMENT

The model number will be found on a label attached to the motor housing. Always mention the model number of your **STRING TRIMMER** when requesting service or ordering repair parts.

PARTS LIST

KEY NO.	PART NUMBER	DESCRIPTION	QTY
1	315614001	Stringhead Reel Assembly (Inc. Key Nos. 18-21)	1
2	311247008	Straight Shaft Assembly (RY15526, Inc. Key Nos. 3-5)	1
	311247009	Straight Shaft Assembly (RY15526VNM, Inc. Key Nos. 3-5)	1
3	940749005	Warning Icon Label	1
4	941851149	Ryobi EXPAND-IT Label	1
5	941588453	Data Label (RY15526)	1
	941588468	Data Label (RY15526VNM)	1
6	660738002	Screw (1/4-20 x 1-1/4 in., Hex Washer Hd.)	1
7	940705021	Logo Label	1
8	313285005	Grass Deflector Assembly (Inc. Key Nos. 6-7 & 9-10)	1
9	638016003	Line Cut-off Blade	1
10	662148001	Screw (M4.5 mm x 1 mm, Pan Hd.)	2
11	660642001	Screw (1/4-20 x 1-1/4 in., Hex Washer Hd.)	1
12	660641001	Screw (10-24 x 5/8 in., Hex Washer Hd.)	1
13	678011001	Flanged Washer	1
14	308210009	Gear Head	1
15	518367001	Spacer	1
16	638125001	Grass Deflector Clamp	1
17	532048001	Crank Handle	1
18	314795003	Fixed Line (0.095 in.) and Blade Housing Assembly	1
19	314608005	Bump Feed Trimmer Head Assembly (Inc. Key No. 21)	1
20	537603002	Flail Blade	2
21	679958001	Compression Spring	1
	Not Shown:		
	995000924	Operator's Manual	

5-1-20
(Rev:02)