SANIPLUS Macerator

CONNECTIONS

TOILET SINK

SHOWER BATHTUB

APPLICATION

RESIDENTIAL



PUMPING DISTANCE

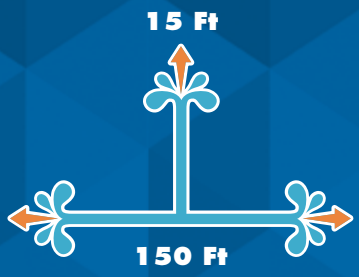

2+1 YEAR LIMITED WARRANTY

INSTALLATION BEHIND THE TOILET

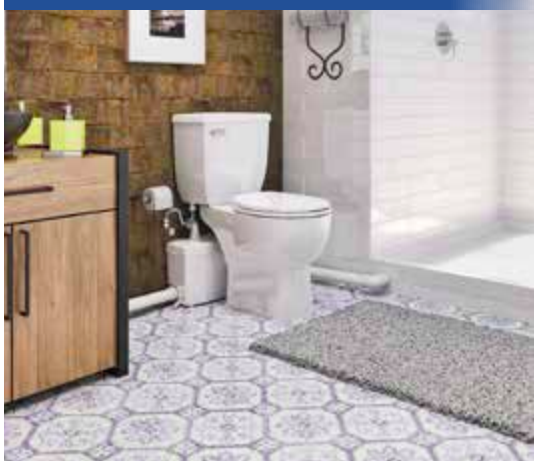

Example of installation. Follow local plumbing codes for actual install.

INSTALLATION BEHIND THE WALL

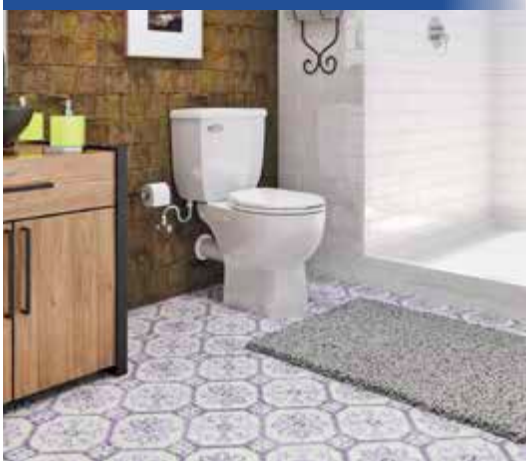

Example of installation. Follow local plumbing codes for actual install.

The **Saniplus is a 1/2 HP pump system** used to install a complete bathroom up to **15 feet below the sewer line, or even up to 150 feet away** from a soil stack. It incorporates **a macerating system** which can handle human waste and toilet paper in residential applications. The blade is made out of a hardened stainless-steel material which **eliminates the need for any service or replacement.**

- **Discharges the waste through a 3/4" or 1"** rigid pipe. **A non-return valve is included** on the discharge elbow assembly provided with the system. This elbow can be rotated 360 degrees depending on the discharge installation.
- Has been designed with a **1–1/2" vent connection** on the top of the lid. All plumbing codes require connection to a vent system. Please note that the vent system should be a two-way air vent as air needs to freely flow both ways. Note: The use of mechanical vents, air admittance valves or similar devices is not permitted.
- Must be connected to **Saniflo's 1.28 GPF / 4.8 LPF rear discharge toilet.** These toilets come in round and elongated (ADA compliant) models. More technical information on page 6.
- Will also discharge gray water from any **sink, bath/shower or urinal**. The wastewater will drain into the system via **two 2" inlets with built-in check valves** on either side of the housing. Note that when adding a bathtub/shower, the base should be raised up by a minimum of 6" off the floor.



Toilet Tank

(Part N° 005)

Insulated 1.28 GPF / 4.8 LPF toilet tank equipped with all internal valves. For more information, please turn to page 6.

Round/Elongated Bowl

(Part N° 083 or 087)

Rear discharge toilet with 16–3/4" seating height (Elongated bowl is ADA compliant). For more information, please turn to page 6.

Extension Pipe

(Part N° 030)

18" long PVC pipe with internal gasket used to hide the pump behind the wall. For more information, please turn to page 51.

Saniplus

(Part N° 002)

1/2 HP macerating pump for residential applications. Ideal for creating a complete bathroom in a basement, attic, garage, pool house, etc.

PLEASE CALL US TOLL-FREE AT
800-571-8191 (US) / 800-363-5874 (CDN)
TO PURCHASE PARTS REFERENCED BELOW

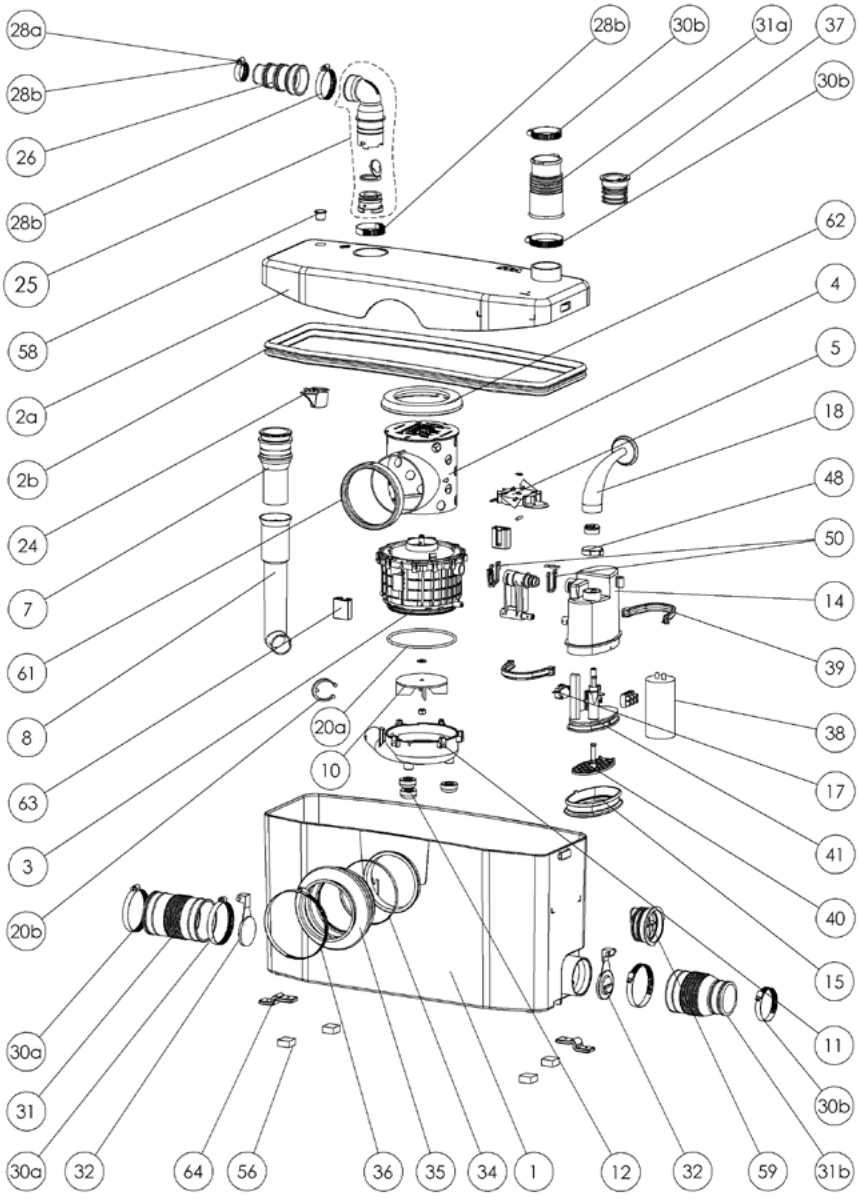

DIMENSIONAL DRAWINGS

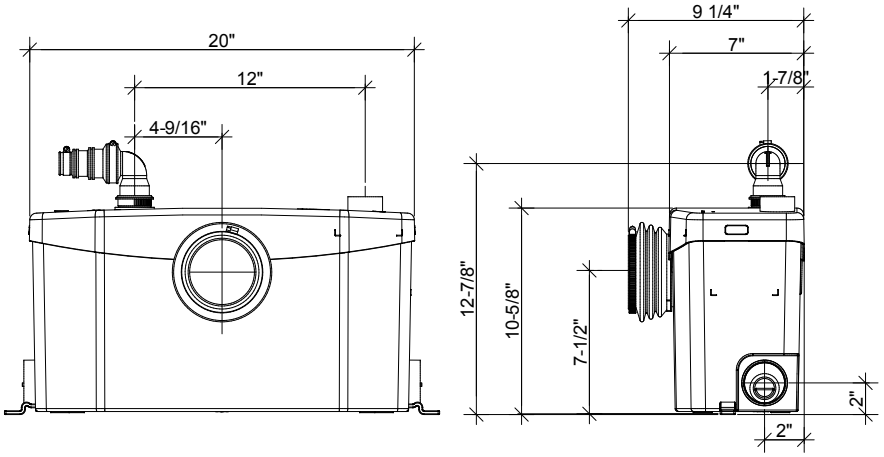

Choose any shower, bathtub or sink and enjoy your dream bathroom.

TECHNICAL SPECIFICATIONS

Pump type:
Macerator
Electrical:
120 V – 60 Hz / 4.5 Amps (Max)
Motor:
0.5 HP oil-filled thermally protected motor
Capacitor rating:
45 microfarad
Operating Temperature:
104°F (110°F Max.)
Power cord length:
47–1/2 inches
Noise level:
≤ 53 dBA (Lp) (measured at 3 ft.)
Discharge pipe diameter:
3/4" or 1"
Discharge rate at 15 ft:
17 GPM
Discharge rate at 3 ft:
27 GPM
Shut-off head:
30 ft.
Normal running time:
10-12s
Capacity:
3 gallons / 11.4 liters
Inlets:
2" (sides), 1–1/2" vent (top)
Method of activation:
Membrane/microswitch
Shower/bathtub base height:
6" min
Weight:
18 lbs / 8.2 kg
Certifying agencies:
CSA (IPC, NSPC), IAPMO (UPC)
Recommended accessories:
Descaler, Sanialarm
Connections:
Rear outlet toilet, sink, shower/bathtub

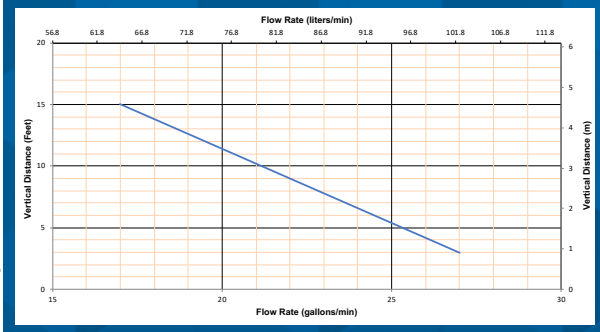

SANIFLUSH
TWO-PIECE ROUND TOILET SYSTEM

Close-Couple Toilet – 1.28 GPF (4.8 Liter Flush)

SANIFLUSH 083 & 005

✓ 083 Round Bowl

- Vitreous china
- Integral P-trap and a rear outlet spigot
- Seating height: 16 ¾" (without seat)
- Large 3" trapway
- Wash down style toilet
- Low flush toilet; it uses 1.28 gallons (4.8 L) per flush
- Toilet supplied with a set of lag screws, plastic anchors and china protectors
- Water spot measures 4 ½" x 3 ¾"
- 1 Year limited warranty

✓ 005 Toilet Tank

- Vitreous china
- Insulated tank to prevent condensation
- The zero re-fill fill valve is easily adjustable
- The flush valve has a silicone flapper seal
- Tank is not designed to be used with refill hose thus not provided.
- Water level mark applied to the overflow tube
- Toilet tank supplied with bowl screws, washers and wing nuts
- 1 year limited warranty
- Warranty for fill and flush valve as per manufacturer

Nominal Dimensions

31" **x** 17-3/4" **x** 27"
(787mm **x** 451mm **x** 686mm)

Fixture Dimensions and Hydraulic Performance - Meets or Exceeds the Following Specifications

- ANSI/ASME A112.19.2M and CAN/CSA B45 Requirements
- IAPMO/UPC Certificate of Listing
- EPA WaterSense labeled

Notes

- Available in white only
- Includes soft-close toilet seat along with mounting hardware kit Part# SEATROUND
- Replacement fill valve recommended – Fluidmaster 400A or equal (not supplied)



Round Bowl with Tank (083 & 005)

Care & Cleaning

- When cleaning toilet, wash it with mild soapy water or liquid cleaners that are not chlorine or bleach based. Avoid using harsh detergents.
- We do not recommend the use of in-tank cleansers. Products containing chlorine can cause damage to components inside the tank and cause them to fail prematurely.

SANIFLUSH
TWO-PIECE ROUND TOILET SYSTEM

Close-Couple Toilet – 1.28 GPF (4.8 Liter Flush)

SANIFLUSH 083 & 005

Drawings and Dimensions

