KHT410-33

33 Inch Dual Mount Single Bowl
Stainless Steel Kitchen Sink

Kräus®
SPECIFICATION SHEET

Sink Dimensions
Overall Dimensions: 33" x 22"
Bowl Dimensions: 30 1/2" x 17"
Sink Depth: 9"

Features
- 18 Gauge Stainless Steel Construction
- 3/8" Radius Corners in the Bowl for Ease of Cleaning
- Pre-drilled Soap Dispenser Hole with Provided Cap
- Single Bowl Dual Mount Sink
- Required Minimum Cabinet Size: 36" Left to Right, 24" Front to Back
- Rear Off-Set Drain
- 3 1/2" Drain Opening
- NoiseDefend Undercoating and Sound Dampening Pads

Accessories Included
- Strainer ST-1
- Drain Cap STC-2
- Bottom Grid KBG-T410-33
- Soap Dispenser Hole Cap KP22189
- Cut-Out Template
- Mounting Hardware

CODES/STANDARDS:
Product Certification
cUPC (ASME A112.19.3/CSA B45.4)

NOTE: Maximum countertop thickness for Top Mount installation is 1 1/2".

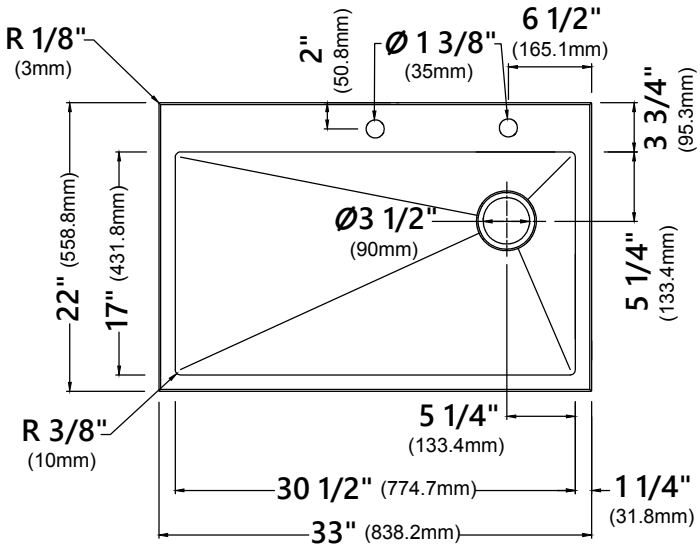

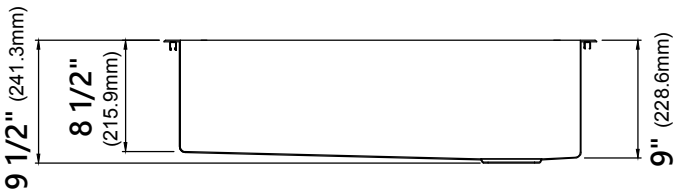

Warranty
Kraus Limited Lifetime Warranty
see website for details **www.kraususa.com**

Kraus USA Customer Service
1.800.775.0703 | customerservice@kraususa.com

REV. October 7, 2019