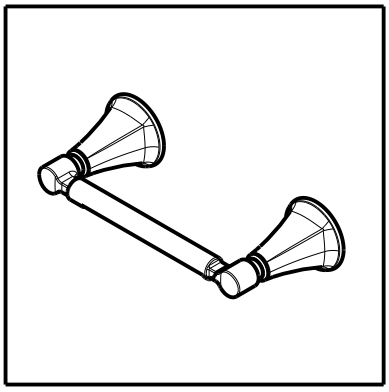

ACCESSORIES

- Lorna Bath Collection
- Toilet Paper Holder

Submitted Model No.: _____

Specific Features: _____

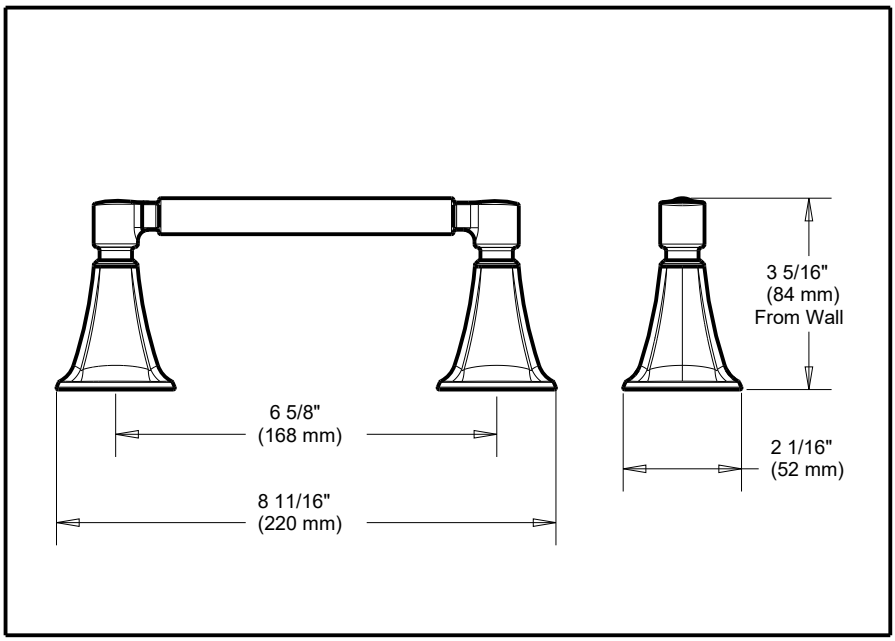

STANDARD SPECIFICATIONS:

- Mounting hardware and mounting template included with product.

Delta reserves the right (1) to make changes in specifications and materials, and (2) to change or discontinue models, both without notice or obligation. Dimensions are for reference only. See current full-line price book or www.deltafaucet.com for finish options and product availability.

Liberty Hardware Manufacturing Corporation
140 Bussiness Park Drive, Winston-Salem, NC 27107
1.800.964.4850 • www.libertyhardware.com
© 2024 LHMC, A Masco Company