READ AND SAVE THESE INSTRUCTIONS

CEILING FAN INSTALLATION AND OPERATION INSTRUCTION

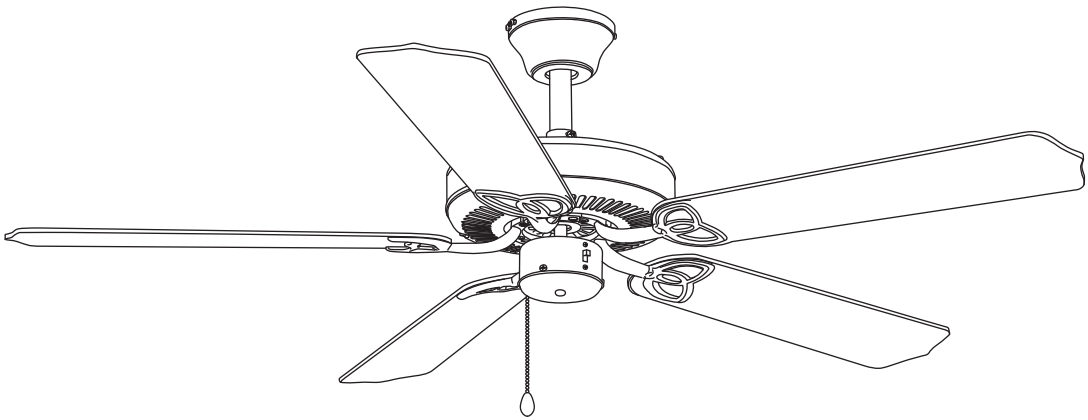

FAN RATING AC 120V. 60Hz
UL LISTED MODE: AC-552

1. TOOLS AND MATERIALS REQUIRED

- Philips screw driver
- Blade screw driver
- 11 mm wrench
- Step ladder
- Wire cutters

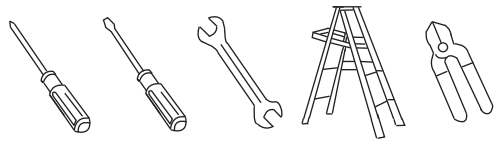

2. PACKAGE CONTENTS

Unpack your fan and check the contents. You should have the following items:

a. Blade set (5)
b. Hanger bracket
c. Canopy
d. Downrod
e. Fan motor assembly
f. Blade bracket set (5)
g. Package hardware
   1) Mounting hardware :
      wood screws (2), lock washers (4)
      washers (2), wire nuts (3)
   2) Blade attachment hardware:
      screws (16), fiber washers (16)
   3) Pull chain and fobs
   4) Balance Kit

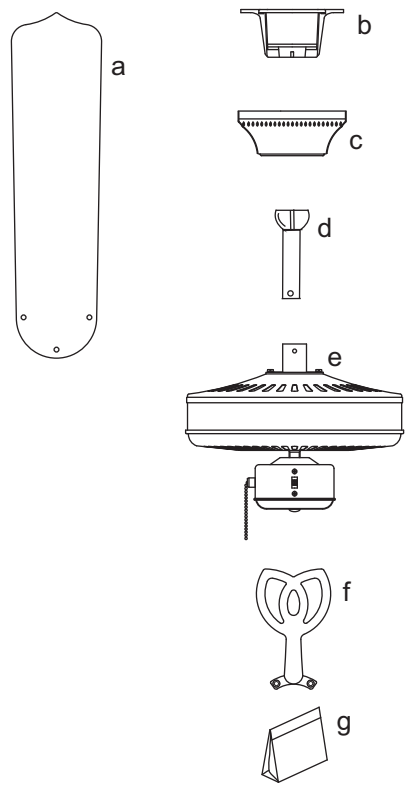

3. SAFETY RULES

1. To reduce the risk of electric shock, insure electricity has been turned off at the circuit breaker or fuse box before beginning.

2. All wiring must be in accordance with the National Electrical Code and local electrical codes. Electrical installation should be performed by a qualified licensed electrician.

3. **WARNING:** To reduce the risk of electrical shock and fire, do not use this fan with any solid-state fan speed control device.

4. **WARNING:** To reduce the risk of fire, electric shock, or personal injury, mount to outlet box marked "acceptable for fan support of 15.8 kg (35 lbs.) or less" and use mounting screws provided with the outlet box. Most outlet boxes commonly used for the support of light fixtures are not acceptable for fan support and may need to be replaced. Due to the complexity of the installation of this fan, a qualified licensed electrician is strongly recommended.

WARNING
TO REDUCE THE RISK OF FIRE, ELECTRIC SHOCK OR PERSONAL INJURY, MOUNT FAN TO OUTLET BOX MARKED "ACCEPTABLE FOR FAN SUPPORT".

5. The outlet box and support structure must be securely mounted and capable of reliably supporting a minimum of 50 pounds. Use only UL Listed outlet boxes marked **"FOR FAN SUPPORT"**.

6. The fan must be mounted with a minimum of 7 feet clearance from the trailing edge of the blades to the floor.

7. Do not operate reversing switch while fan blades are in m otion. Fan must be turned off and blades stopped before reversing blade direction.

8. Avoid placing objects in the path of the blades.

9. To avoid personal injury or damage to the fan and other items, be cautious when working around or cleaning the fan.

10. Do not use water or detergents when cleaning the fan or fan blades. A dry dust cloth or lightly dampened cloth will be suitable for most cleaning.

11. After marking electrical connections, spliced conductors should be turned upward and pushed carefully up into outlet box. The wires should be spread apart with the grounded conductor and the equipment-grounding conductor on one side of the outlet box.

12. Electrical diagrams are reference only. Light kit that are not packed with the fan must be UL Listed and marked suitable for use with the model fan you are installing. Switches must be UL General Use Switches. Refer to the Instructions packaged with the light kits and switches for proper assembly.

WARNING
TO REDUCE THE RISK OF PERSONAL INJURY, DO NOT BEND THE BLADE BRACKETS (ALSO REFERRED TO AS FLANGES) DURING ASSEMBLY OR AFTER INSTALLATION. DO NOT INSERT OBJECTS IN THE PATH OF THE BLADES.

4. MOUNTING OPTIONS

If there isn't an existing UL listed mounting box, then read the following instructions. Disconnect the power by removing fuses or turning off circuit breakers.

Secure the outlet box directly to the building structure. Use appropriate fasteners and building materials. The outlet box and its support must be able to fully support the moving weight of the fan (at least 50 lbs). Do not use plastic outlet boxes.

Figures 1,2 and 3 are examples of different ways to mount the outlet box.

Note: You may need a longer downrod to maintain proper blade clearance when installing on a steep, sloped ceiling. (Fig. 3)

To hang your fan where there is an existing fixture but no ceiling joist, you may need an installation hanger bar as shown in Figure 4.

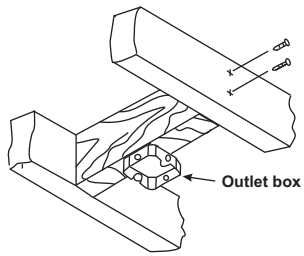

Figure 1

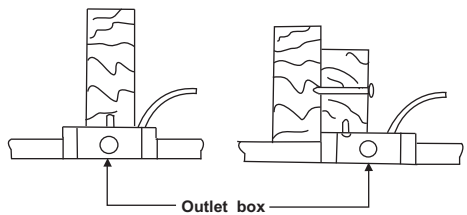

Figure 2

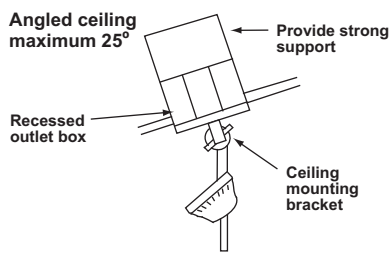

Figure 3

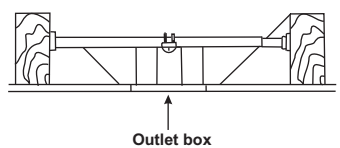

Figure 4

5. HANGING THE FAN

REMEMBER to turn off the power. Follow the steps below to hang your fan properly.

Step 1. Pass the 120-volt supply wires through the center hole in the ceiling hanger bracket as shown in Fig. 5.

Step 2. Secure the hanger bracket to the ceiling outlet box with the screws and washers provided with your outlet box.

Step 3. Remove the hanger pin, lock pin and set screws from the top of the motor assembly.

Step 4. Route wires exiting from the top of the fan motor through the canopy and then through the ball/downrod. (Fig. 6)

Step 5. Align the holes at the bottom of the downrod with the holes in the collar on top of the motor housing. Carefully insert the hitch pin through the holes in the collar and downrod. Be careful not to jam the pin against the wiring inside the downrod. Insert the locking pin through the hole near the end of the hitch pin until it snaps into its locked position. (Fig. 6)

Step 6. Tighten two set screws on top of the fan motor firmly.

Step 7. Place the downrod ball into the hanger bracket socket. This will allow you to make the electrical connections. (Fig. 7)

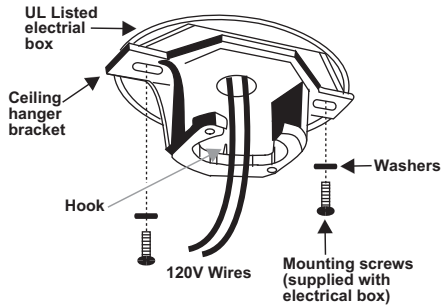

Figure 5

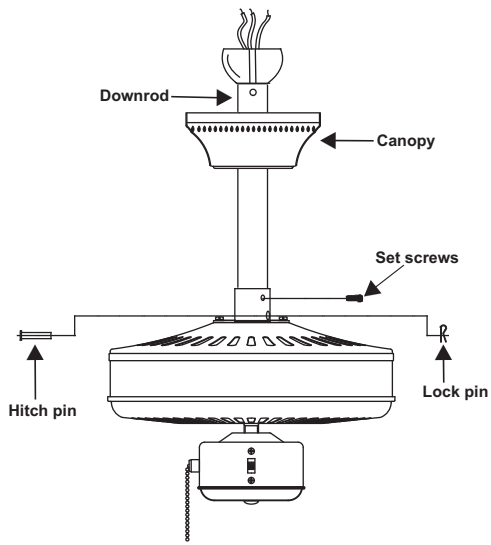

Figure 6

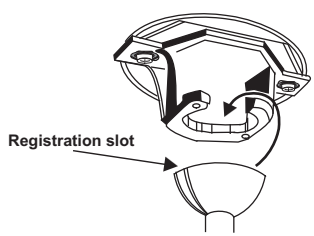

Figure 7

6. MAKE THE ELECTRIC CONNECTIONS

Remember to disconnect the power.
Follow the steps below to connect the fan to your household wiring. Use the wire connecting nuts supplied with your fan. Secure the connectors with electrical tape. Make sure there are no loose strands or connections.

Step 1 Connect the fan supply (black) wire and light supply (blue) wire to the black household supply wire as shown in Figure 8.

Step 2. Connect the neutral fan (white) wire to the white neutral household wire.

Step 3 Connect the fan ground wire (green) to the household ground wire.

Step 4 After connecting the wires, spread them apart so that the green and white wires are on one side of the outlet box and the black and the blue wires are on the other side.

Step 5 Turn the connecting nuts upward and push the wiring into the outlet box.

Figures 9 and 10 illustrate the wiring connections for optional wall control (The wire color out of wall control may vary, see wall control's installation manual for correct wire connections.)

WARNING: TO REDUCE THE RISK OF FIRE, ELECTRIC SHOCK, OR OTHER PERSONAL INJURY. MOUNT FAN ONLY ON AN OUTLET BOX OR SUPPORTING SYSTEM MARKED ACCEPTABLE FOR FAN SUPPORT.

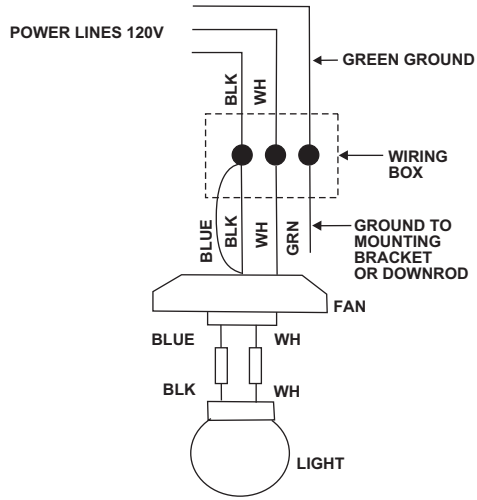

Figure 8

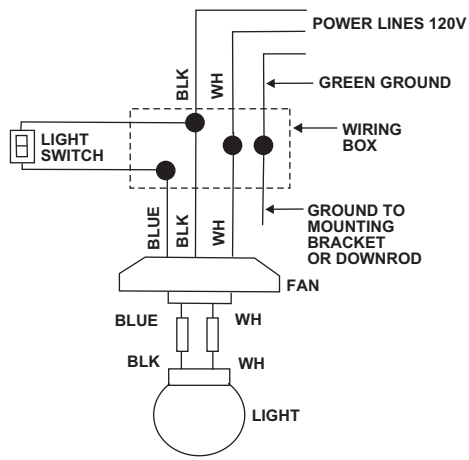

Figure 9

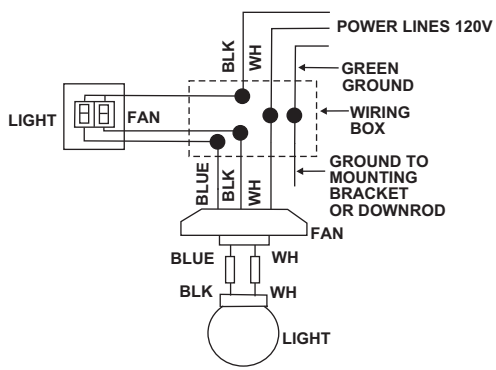

Figure 10

7. FINISHING THE INSTALLATION

1. Remove the 1 of 2 screws from the bottom of the hanger bracket and loosening the other one a half turn from the screw head.

2. Slide the canopy up to mounting bracket and place the key hole on the canopy over the screw on the mounting bracket, turn canopy until it locks in place at the narrow section of the key holes. (Fig. 11)

3. Align the circular hole on canopy with the remaining hole on the mounting bracket, secure by tightening the two set screws. Note: Adjust the canopy screws as necessary until the canopy and canopy cover are snug.

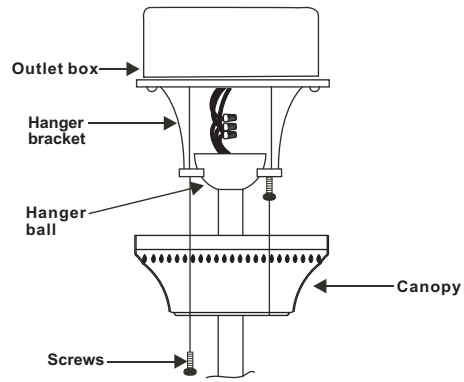

Figure 11

8. ATTACHING THE FAN BLADES

Caution: Remove 5 rubber packing mounts and discard before installation.

Step 1 Attach the blade to the blade bracket using the screws and fiber washers as shown in Figure 12. Start screw into bracket. Repeat for the two remaining screws.

Step 2 Tighten each screw. Make sure the blade is straight.

Step 3 Fasten blade assembly to motor using the screws supplied. (Fig. 12)

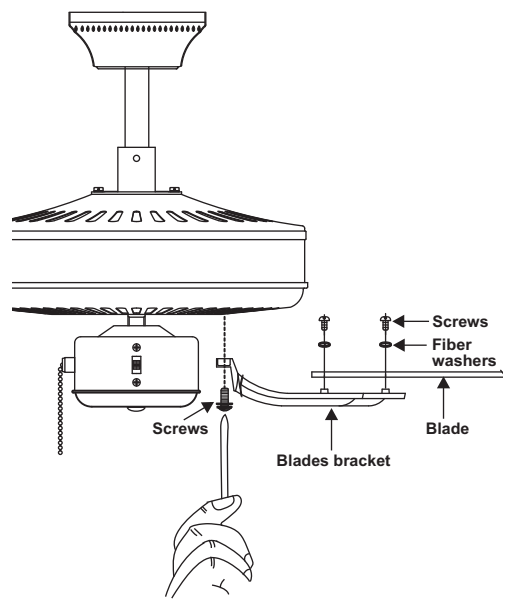

Figure 12

9. OPERATING YOUR FAN

Turn on the power and check the operation of your fan. The pull chain controls the fan speed as follows:

1. 3-speed pull chain- it controls the fan speed as follows: 1 pull- High, 2 pulls- Medium, 3 pulls- Low, and 4 pulls- Off.

Speed settings for warm or cool weather depend on factors such as the room size, ceiling height, number of fans, and so on.

The slide switch controls directions: forward (switch down) or reverse (switch up).

NOTE: Wait for fan to stop before changing the setting of the slide switch.

Warm weather - (Forward) A downward airflow creates a cooling effect as shown in Fig. 13. This allows you to set your air conditioner on a warmer setting without affecting your comfort.

Cool weather - (Reverse) An upward airflow moves warm air off the ceiling area as shown in Fig. 14. This allows you to set your heating unit on a cooler setting without affecting your comfort.

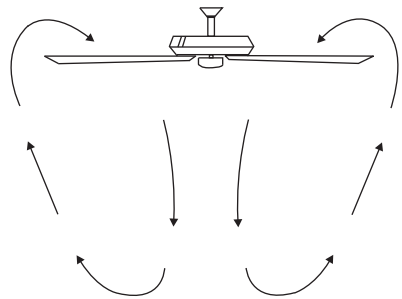

Figure 13

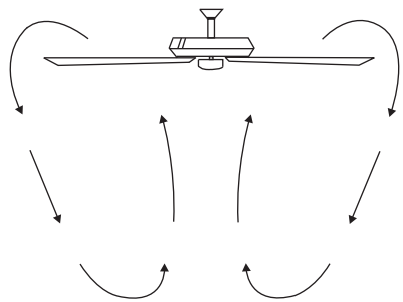

Figure 14

10. TROUBLESHOOTING

Problem	Solution
Fan will not start.	1. Check circuit fuses or breakers.
	2. Check line wire connections to the fan and switch wire connections in the switch housing. **CAUTION:** Make sure main power is off.
Fan sounds noisy.	1. Make sure all motor housing screws are snug.
	2. Make sure the screws that attach the fan blade bracket to the motor hub is tight.
	3. Make sure wire nut connections are not rubbing against each other or the interior wall of the switch housing. **CAUTION:** Make sure main power is off.
	4. Allow a 24-hour "breaking-in" period. Most noise associated with a new fan disappear during this time.
	5. If using an optional light kit, make sure the screws securing the glassware are tight. Check that light bulb is also secure.
	6. Do not connect the fan with wall mounted lighting dimmer(s).
	7. Make sure the upper canopy is a short distance from the ceiling. It should not touch the ceiling.
Fan wobble.	1. Check that all blade and blade arm screws are secure.
	2. Most fan wobbling problems are caused when blade levels are unequal. Check this level by selecting a point on the ceiling above the tip of one of the blades. Measure this distance. Rotate the fan until the next blade is positioned for measurement. Repeat for each blade. The distance deviation should be equal within 1/8".
	3. Use the enclosed Blade Balancing Kit if the blade wobble is still noticeable.
	4. If the blade wobble is still noticeable, interchanging two adjacent (side by side) blades can redistribute the weight and possibly result in smoother operation.
	WARNING: TO REDUCE THE RISK OF PERSONAL INJURY, DO NOT BEND THE BLADE ARM WHILE INSTALLING, BALANCING THE BLADES, OR CLEANING THE FAN. DO NOT INSERT FOREIGN OBJECTS BETWEEN ROTATING FAN BLADES.

LIGHT KIT INSTALLATION INSTRUCTION

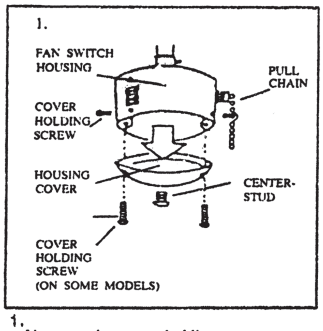

1.
- Unscrew the cover holding screws. remove housing cover from the fan switch housing
- Unscrew center-stud.

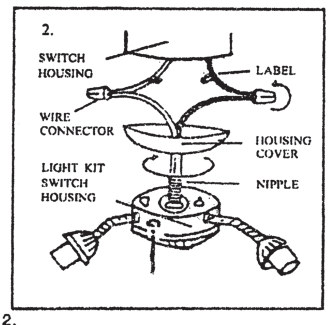

2.
- Attach the cover to light kit switch housing by feeding the kit wires(black and white) through the hole of the cover and screw it onto the housing
- Locate two single wires in switch housing. White (gray on some models) and blue (orange on some models) labeled "for light".
- Connect them to the light kit wires with wire connectors.
  -White (gray) to white
  -Blue(orange) to black

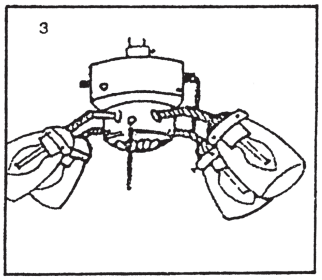

3.
- Carefully push all wire back into switch housing of fan.Then replace the cover with original screws.
- Install 60 watt (max.) Bulb (not provided) and glassware or shade.Tighten three thumb screws provided on the fitter gently (If the thumb screws are too tight to operate by thumb , use screw driver). Do not over tighten.
- Restore the power and your light kit is ready for operation

NOTE:These procedures apply to 1,3,4, 5-light kits.

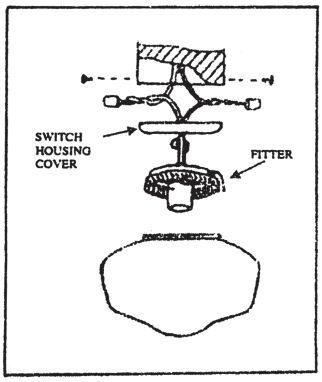

VO-200