ASSEMBLY INSTRUCTIONS
OXFORD FULL-QUEEN-KING BED

READ this sheet prior to assembly to familiarise yourself with the various stage of construction. Carefully open the pack supplied and check the contents against the parts and fitting check list. Do not destroy any of the packing until you are certain that you have all the necessary part for the assembly.

CAUTION: There are small components used in the contruction of this unit. These loose items should kept away from young children whilst assembling your unit to avoid the danger of choking hazards.

INFORMATION:
-Due to the size of this product we recommend that it is assembled in the room intended for use.
-Check all screws or bolts are tightened and inspect regularly.
-Make sure the support legs remain in contact with the ground at all times.
-DONOT use power tools to construct is this product.
-DONOT over tighten the screws or bolts.
-DONOT tighten screws until the product is fully assembled
Please retain these instruction for future reference

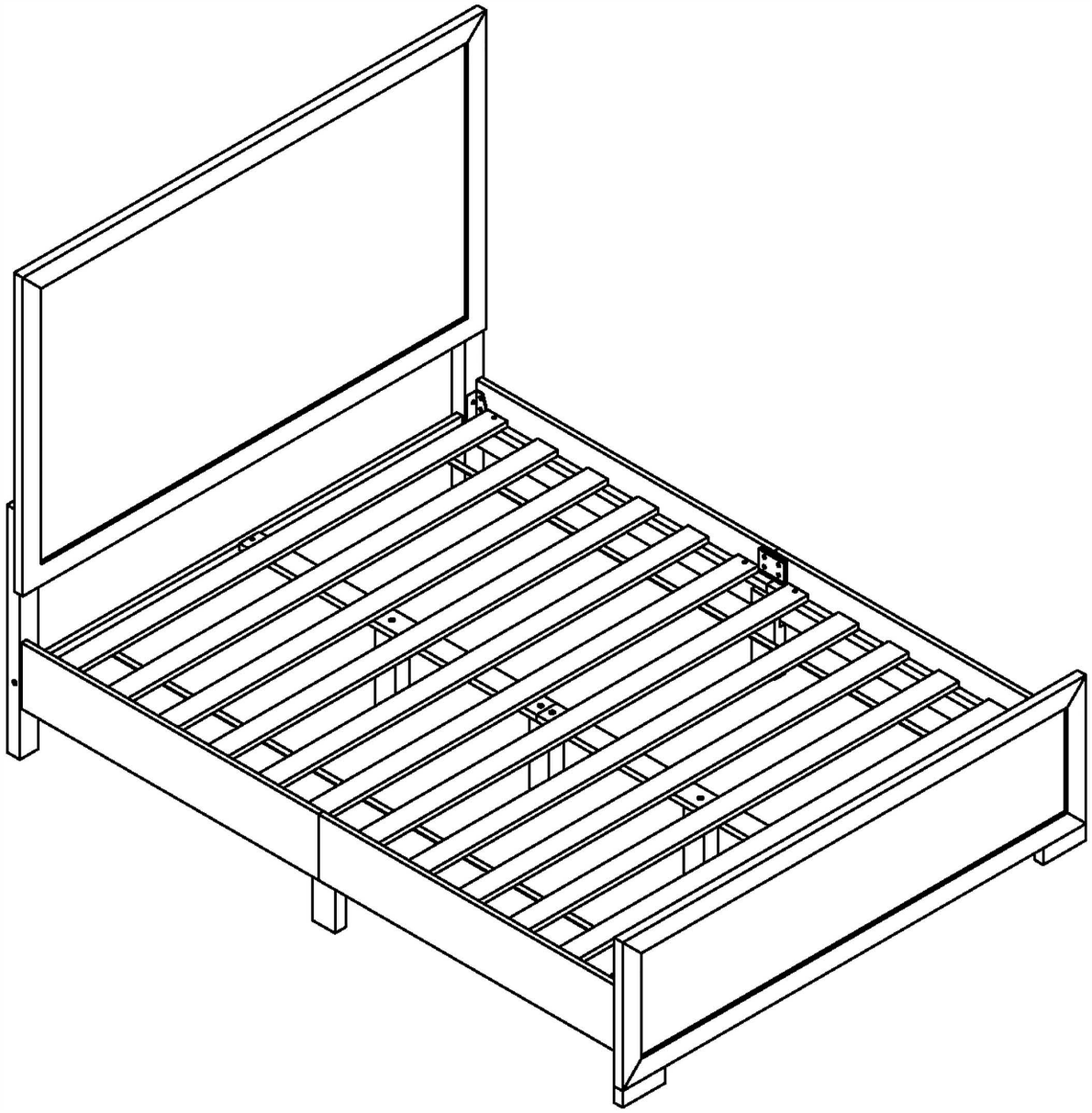

ASSEMBLY INSTRUCTIONS
OXFORD FULL-QUEEN-KING BED

Before starting assemble, please check all parts and hardware packed in carton to make sure all of thoses are completely included in the box. If any part(s) or hardware (s) are missing or damage, please contact your nearest furniture dealer for replace.
*Please do not tighten the bolts or screw before completed last step.

Part List & illustration

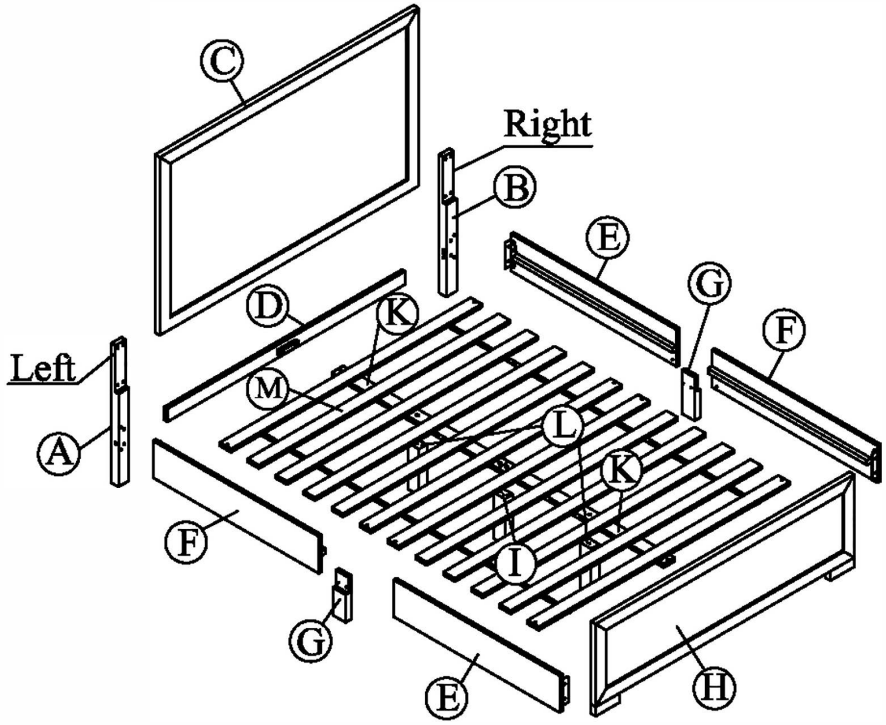

Hardware & illustration

No	Description	Qty
1	Allen Key	1pc
2	Ø1/4" x 15mm	8pcs
3	4 x 30mm	10pcs
4	Ø1/4" x 30mm	16pcs
5	Ø10 x 40mm	16pcs
6	4 x 15mm	8pcs
7	Ø1/4" x 90mm	2pcs
8	Metal Bracket	2pcs

Part List & illustration

A	B	C	D	E	F	G	H	I	K	L	M
1pc	1pc	1pc	1pc	2pcs	2pcs	2pcs	1pc	1pc	2pcs	2pcs	12pcs

STEP 1

No	Description	Qty
1	Allen Key	1pc
5	Ø10 x 40mm	4pcs
7	Ø1/4" x 90mm	2pcs

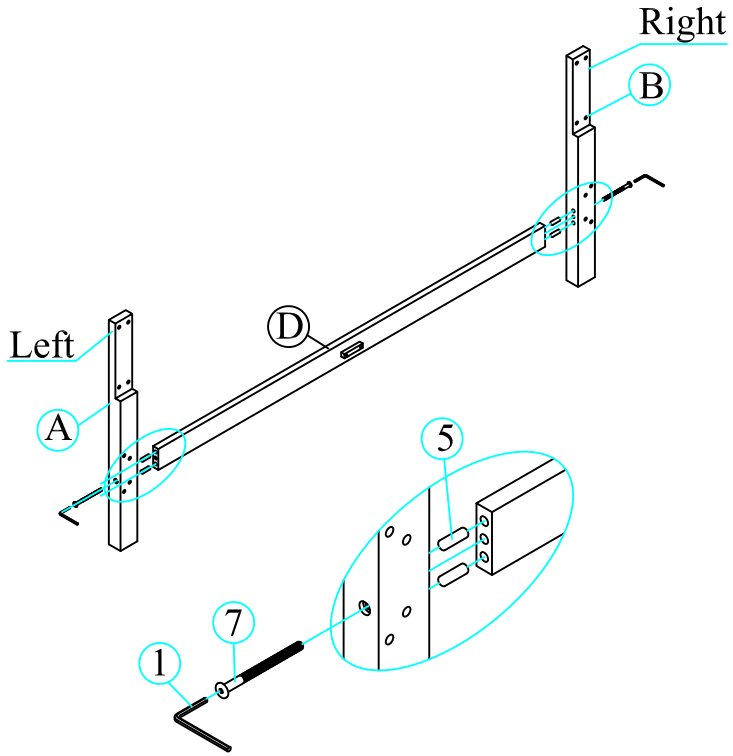

STEP 2

No	Description	Qty
1	Allen Key	1pc
4	Ø1/4" x 30mm	8pcs

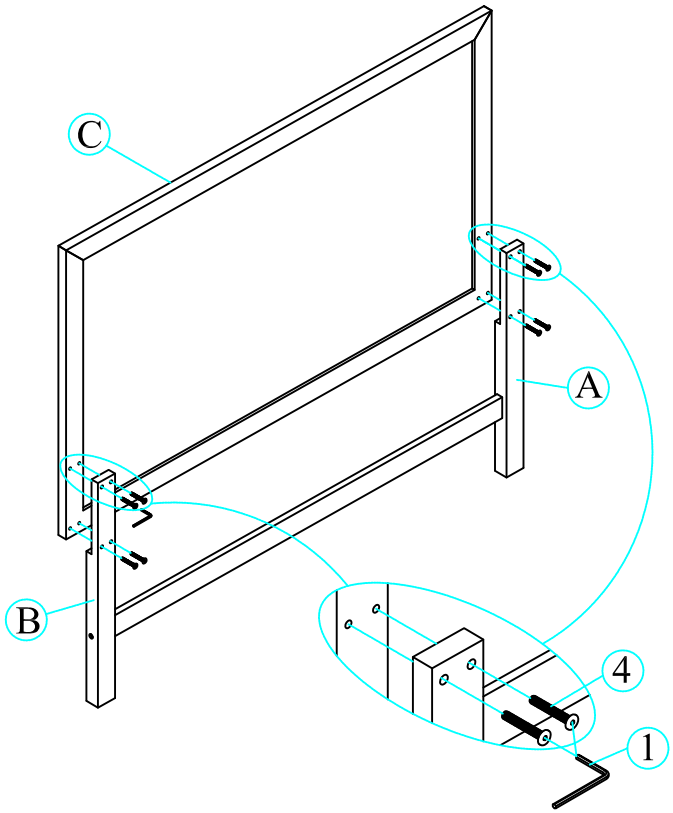

STEP 3

No	Description	Qty
5	Ø10 x 40mm	4pcs

Note: Right rail and left rail is assemble and using hardware list the same.

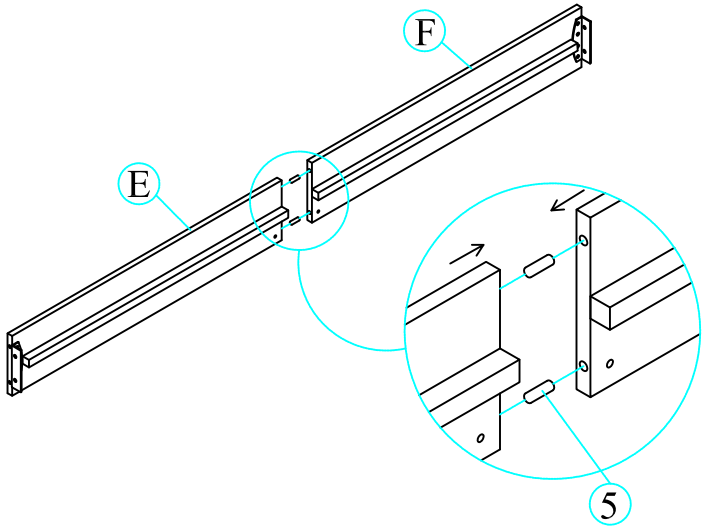

STEP 4

No	Description	Qty
1	Allen Key	1pc
4	Ø1/4" x 30mm	4pcs

Note: Right support leg and left support leg is assemble and using hardware list the same.

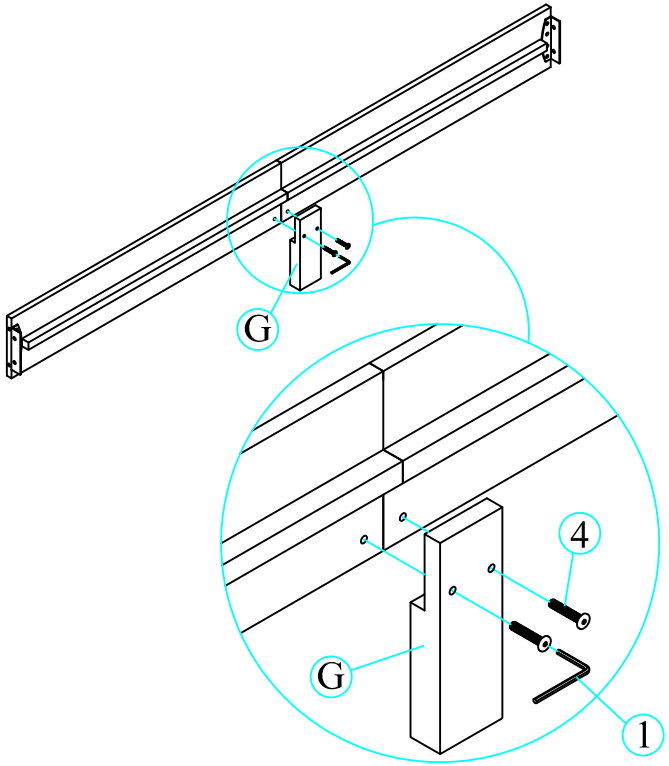

STEP 5

No	Description	Qty
1	Allen Key	1pc
2	Ø1/4" x 15mm	8pcs
5	Ø10 x 40mm	8pcs

*Noted: All Bolts and Screws only Assembly, not tighten for this step.

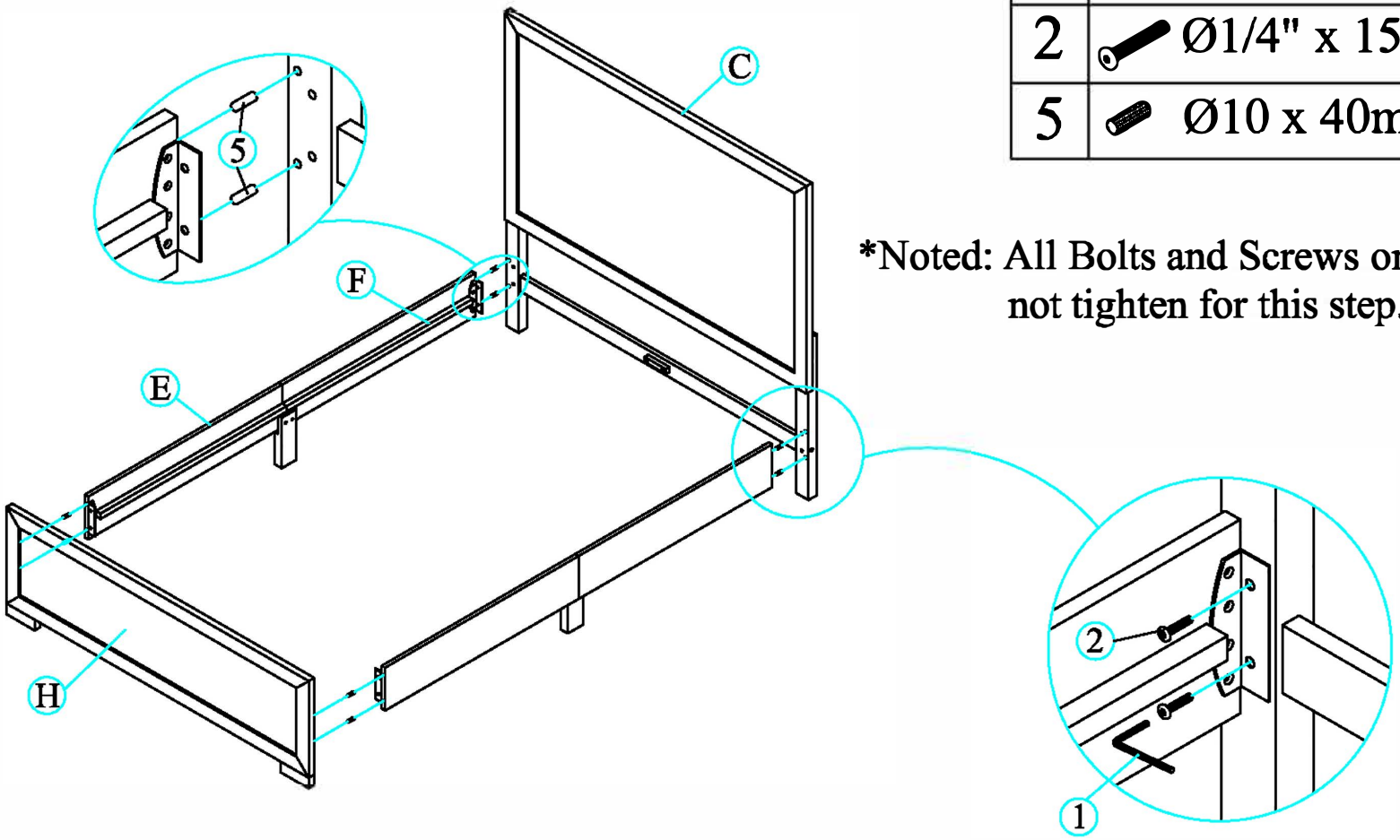

STEP 6

No	Description	Qty
1	Allen Key	1pc
3	4 x 30mm	2pcs
4	Ø1/4" x 30mm	4pcs

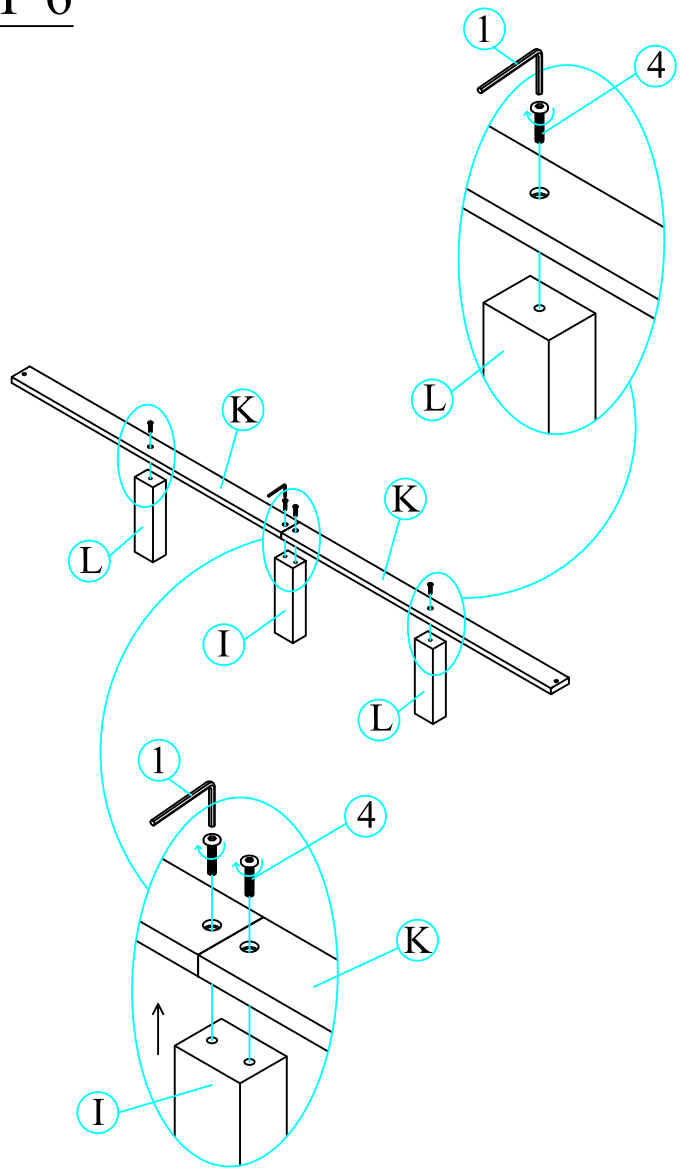

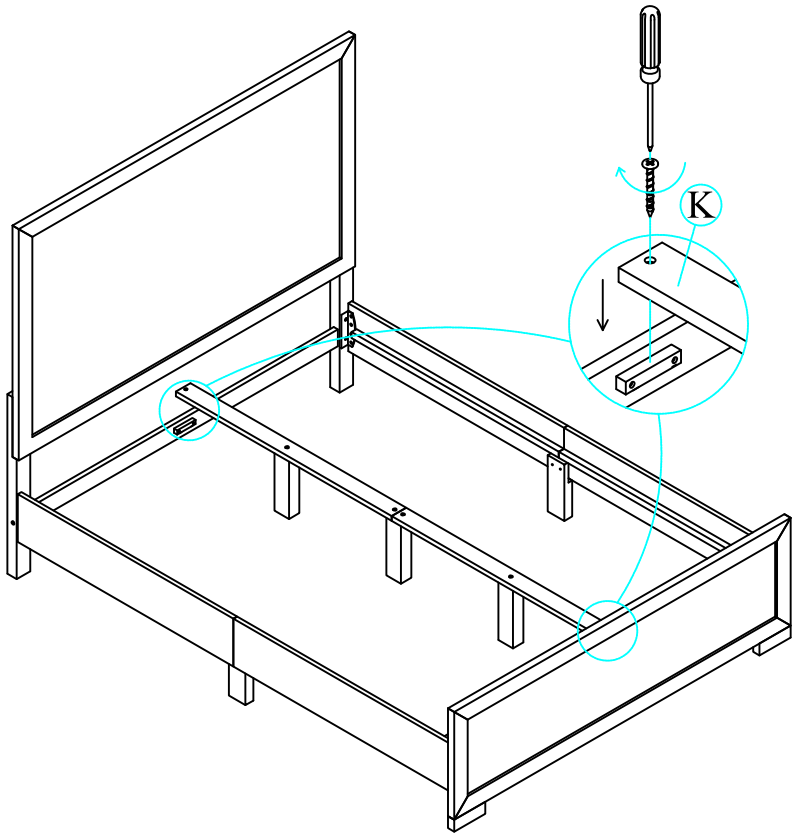

STEP 7

No	Description	Qty
3	4 x 30mm	8pcs
6	4 x 15mm	8pcs
8	Metal Bracket	2pcs
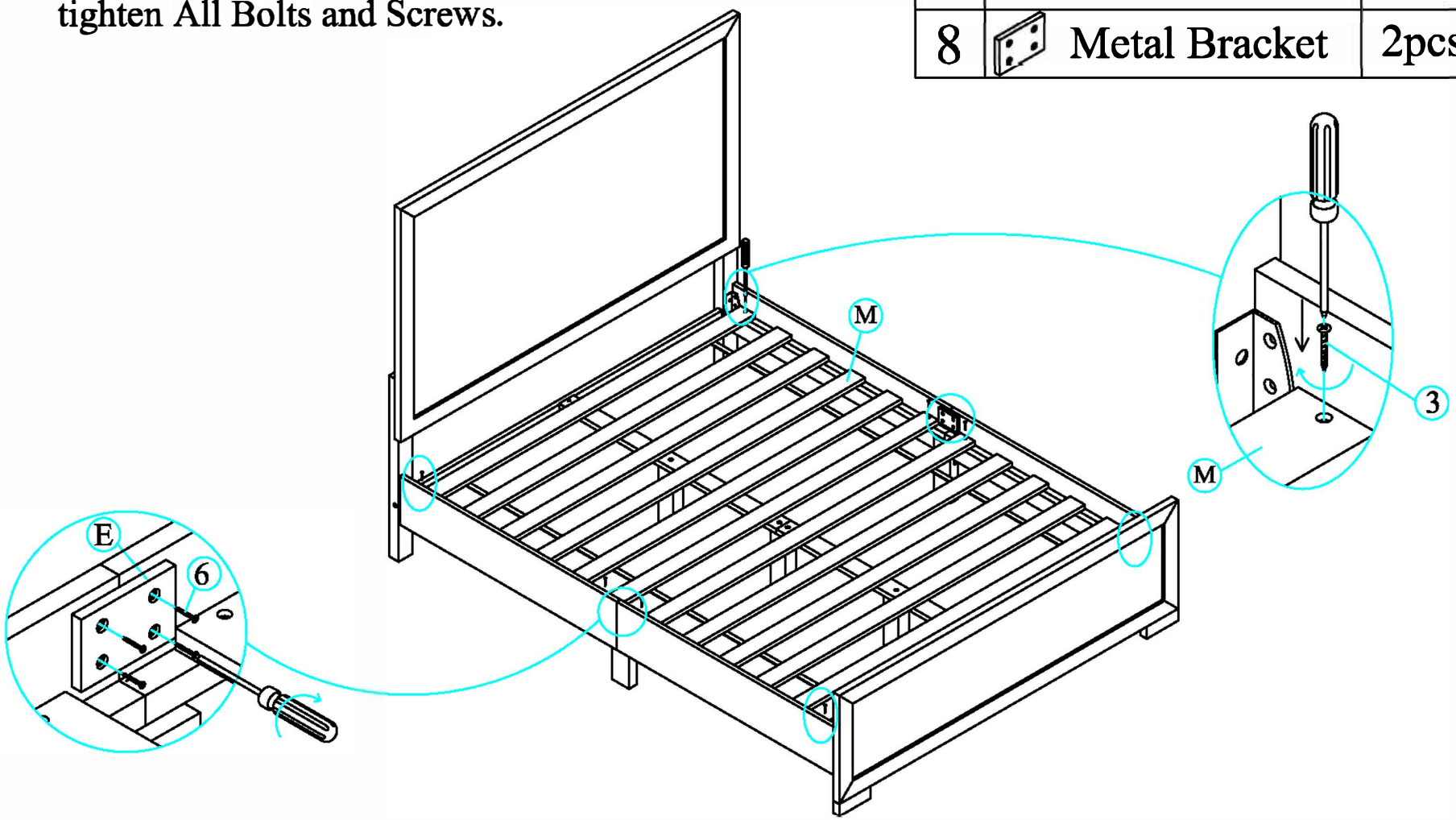
*Noted: After finished assembly,
tighten All Bolts and Screws.