# Lamp installation

INSTALLATION SHEET

**START FROM HERE**

- Make sure power is completely off at the fuse box.
- Have your fixture installed by a qualified licensed electrician
- Prepare everything in a clear area.
- Wear gloves at all times during this installation.
- Read instructions carefully before you start assembly.
- Keep this instruction sheet for future reference.

**Please Note:**

- This product uses E26light source 。
- Unless otherwise indicated, do not touch any part of E26 unnecessary contact with the module could cause permanent damage.
- For dimming, an ELV (Electronic Low Voltage) type of dimmer is required.

NOTE :this product just one hanging plate connect to the power box,so you need get the hanging plate from the base before you install it . For your safe ,The installation must ensure that the line is powered off.

## Lamp installation

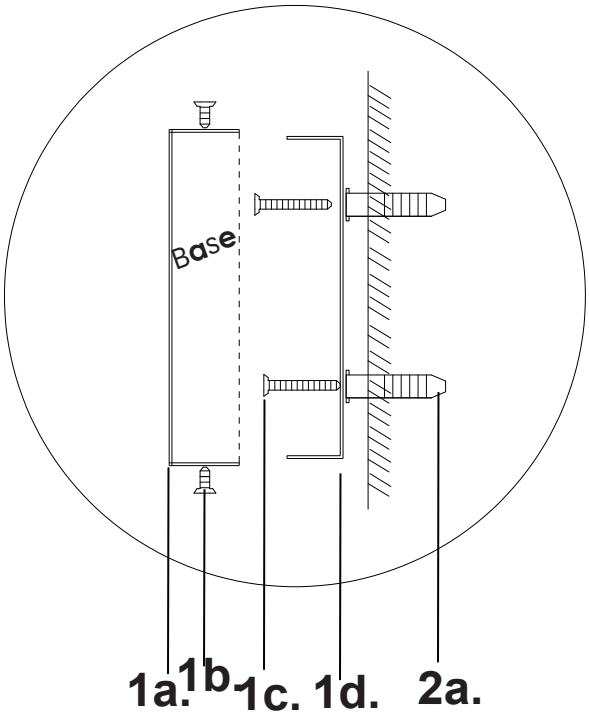

installation steps

1.Fix (2a) to the wall 。

2.Fix (1d) with (1c) screw。

3.Connect the base with (1d) and fix it with (1b) 。

4.Fix the lampshade tightly with the lamp holder ring。

5.Equipped with E26 light source。 (Not included)

6.Congratulations, you have completed the installation and can be powered on