HOME
DECORATORS
COLLECTION

Item #1001029005
Model #AL499-NI

USE AND CARE GUIDE

MARSHLAND 52 IN. CEILING FAN

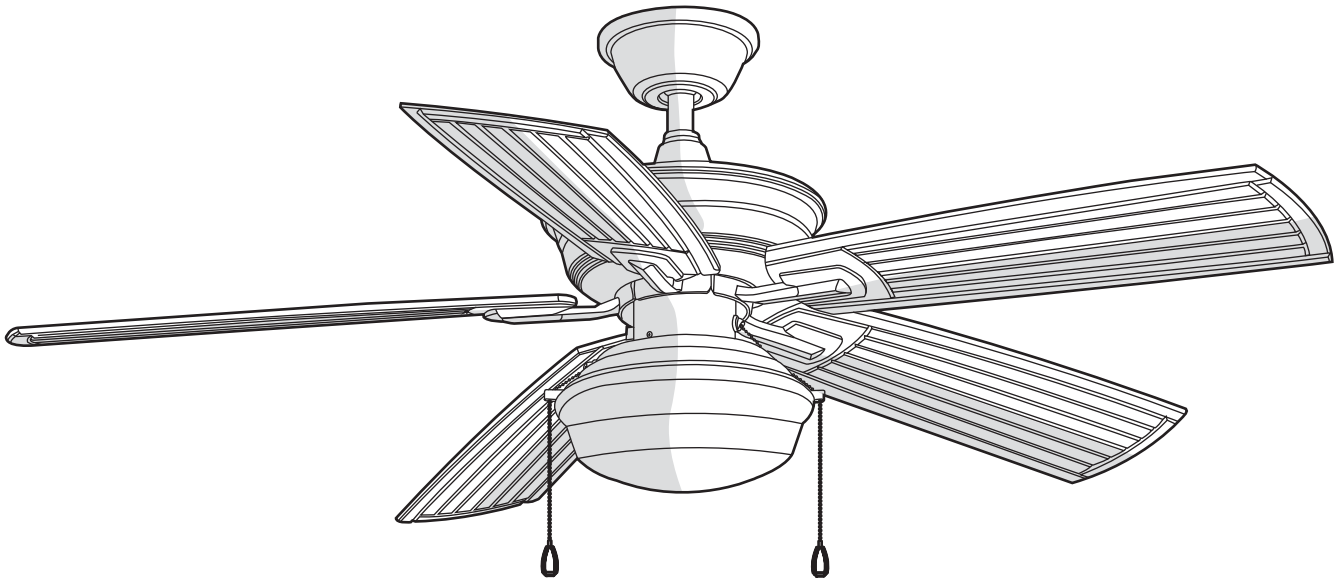

Questions, problems, missing parts? Before returning to the store,
call Home Decorators Collection Customer Service
8 a.m. - 6 p.m., EST, Monday-Friday

1-800-986-3460

HOMEDEPOT.COM/HOMEDECORATORS

THANK YOU

We appreciate the trust and confidence you have placed in Home Decorators Collection through the purchase of this ceiling fan. We strive to continually create quality products designed to enhance your home. Visit us online to see our full line of products available for your home improvement needs. Thank you for choosing Home Decorators Collection!

Table of Contents

Table of Contents 2

Safety Information 3

Warranty 4

Pre-Installation 4
- Specifications 4
- Tools Required 4
- Hardware Included 5
- Package Contents 6
- Dual Mounting Instruction 7

Installation 8

Assembly 9
- Standard Ceiling Mounting 9
- Close-to-Ceiling Mounting 10
- Hanging the Fan 11
- Attaching the Fan Blades 14
- Installing the Light Kit 16

Operation 18
- Pull Chain Operating Instructions 18
- Reverse Switch Operating Instructions 18

Care and Cleaning 19

Troubleshooting 19

Service Parts 21

Safety Information

1. To reduce the risk of electric shock, ensure electricity has been turned off at the circuit breaker or fuse box before beginning.

2. All wiring must be in accordance with the National Electrical Code “ANSI/NFPA 70-1999” and local electrical codes. Electrical installation should be performed by a qualified licensed electrician.

3. The outlet box and support structure must be securely mounted and capable of reliably supporting a minimum of 35 lbs. Use only UL Listed outlet boxes marked “FOR FAN SUPPORT.”

4. The fan must be mounted with a minimum of 7 ft. clearance from the trailing edge of the blades to the floor.

5. Avoid placing objects in the path of the blades.

6. To avoid personal injury or damage to the fan and other items, be cautious when working around or cleaning the fan.

7. Do not use water or detergents when cleaning the fan or fan blades. A dry dust cloth or lightly dampened cloth will be suitable for most cleaning.

8. After making electrical connections, spliced conductors should be turned upward and pushed carefully up into the outlet box. The wires should be spread apart with the grounded conductor and the equipment-grounding conductor on one side of the outlet box and ungrounded conductor on the other side of the outlet box.

9. All setscrews must be checked and retightened where necessary before installation.

10. This device complies with part 15 of the FCC Rules. Operation is subject to the following two conditions: (1) This device may not cause harmful interference, and (2) this device must accept any interference received, including interference that may cause undesired operation.

WARNING: To reduce the risk of electric shock, ensure electricity has been turned off at the circuit breaker or fuse box before beginning.

WARNING: To reduce the risk of electrical shock or fire, do not use this fan with any solid-state fan speed control device. It will permanently damage the electronic circuitry.

WARNING: To reduce the risk of personal injury, do not bend the blade arms (also referred to as flanges), when installing the brackets, balancing the blades or cleaning the fan.

WARNING: Do not insert foreign objects in-between rotating fan blades.

WARNING: To reduce the risk of fire, electric shock or personal injury, mount the fan to the outlet box marked acceptable for fan support with the screws provided with the outlet box.

CAUTION: To reduce the risk of personal injury, use only the screws provided with the outlet box.

Warranty

We warrant the fan motor to be free from defects in workmanship and material present at time of shipment from the factory for a period of lifetime after the date of purchase by the original purchaser. We also warrant that all other fan parts, excluding any glass or acrylic blades, to be free from defects in workmanship and material at the time of shipment from the factory for a period of two years after the date of purchase by the original purchaser. We agree to correct such defects without charge or at our option replace with a comparable or superior model if the product is returned. To obtain warranty service, you must present a copy of the receipt as proof of purchase. All costs of removing and reinstalling the product are your responsibility. Damage to any part such as by accident, misuse, improper installation or by affixing any accessories, is not covered by this warranty. Because of varying climatic conditions this warranty does not cover any changes in brass finish, including rusting, pitting, corroding, tarnishing or peeling. Brass finishes of this type give their longest useful life when protected from varying weather conditions. A certain amount of “wobble” is normal and should not be considered a defect. Servicing performed by unauthorized persons shall render the warranty invalid. There is no other express warranty. We hereby disclaim any and all warranties, including but not limited to those of merchantability and fitness for a particular purpose to the extent permitted by law. The duration of any implied warranty which cannot be disclaimed is limited to the time period as specified in the express warranty. Some states do not allow limitation on how long an implied warranty lasts, so the above limitation may not apply to you. The retailer shall not be liable for incidental, consequential, or special damages arising out of or in connection with product use or performance except as may otherwise be accorded by law. Some states do not allow the exclusion of incidental or consequential damages, so the above exclusion or limitation may not apply to you. This warranty gives specific legal rights, and you may also have other rights which vary from state to state. This warranty supersedes all prior warranties. Shipping costs for any return of product as part of a claim on the warranty must be paid by the customer.

Contact the Customer Service Team at 1-800-986-3460 or visit www.HOMEDEPOT.COM/HOMEDECORATORS

Pre-Installation

SPECIFICATIONS

Fan size	Speed	Volts	Amps	Watts	RPM	CFM	N.W.	G.W.	C.F.
52 in.	Low	120	0.24	10	62	1483	9.6 kg (21.12 lbs.)	10.83 kg (23.83 lbs.)	2.10 cu. ft.
	Medium		0.42	33	126	3326			
	High		0.60	69	184	4903			

NOTE: These are approximate measures. They do not include amps and wattage used by the light kit.

UL LISTED

TOOLS REQUIRED

Phillips screwdriver

Flat blade screwdriver

Step ladder

Wire stripper

Electrical tape

HARDWARE INCLUDED

NOTE: Hardware shown to actual size unless noted otherwise in the table below.

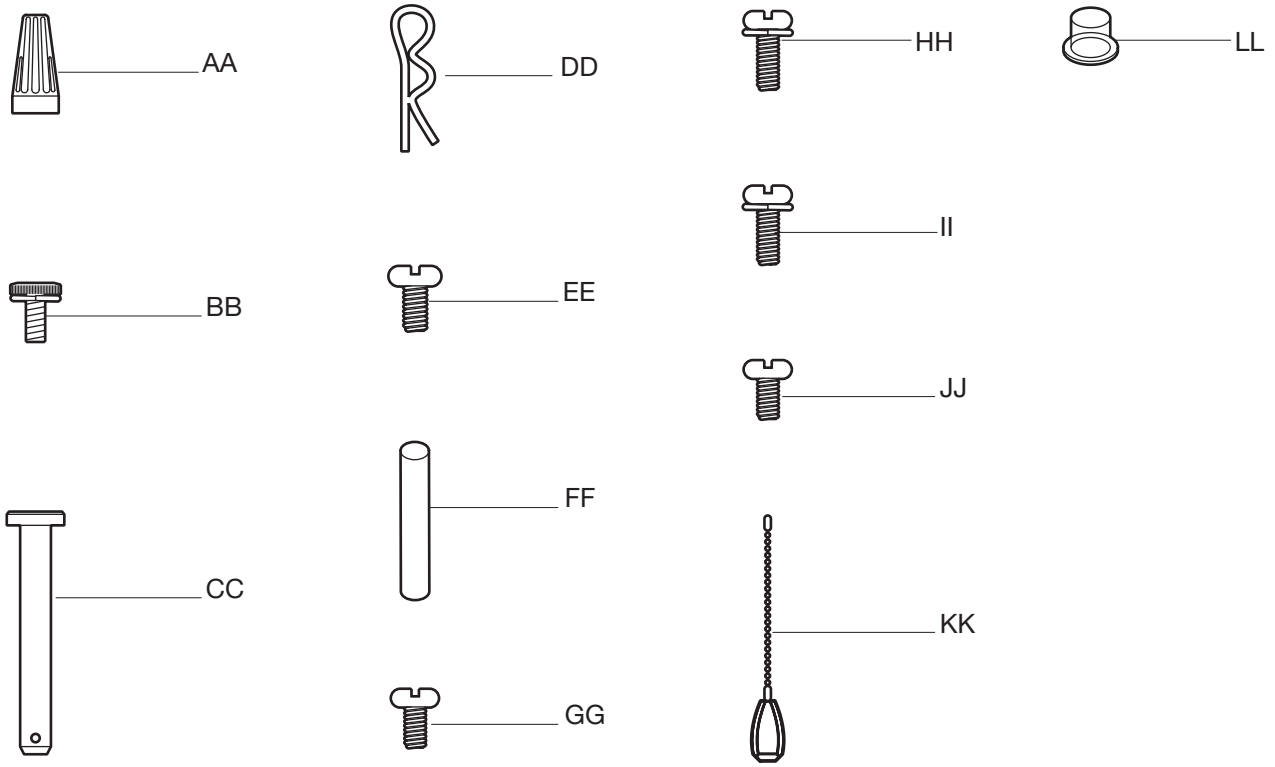

Part	Description	Quantity
AA	Plastic wire nut	3
BB	Canopy mounting screw with lock washer (preassembled)	4
CC	Clevis pin (preassembled)	1
DD	Cotter pin (preassembled)	1
EE	Cross pin (preassembled)	1
FF	Setscrew (preassembled)	1
GG	Collar setscrews (preassembled)	2
HH	Collar mounting screws with lock washers (preassembled)	6
II	Blade arm screw with lock washer (preassembled)	10
JJ	Light kit mounting screws (preassembled)	3
KK	Pull chains and fobs (not to scale)	2
LL	Plastic plug (not to scale)	1

PACKAGE CONTENTS

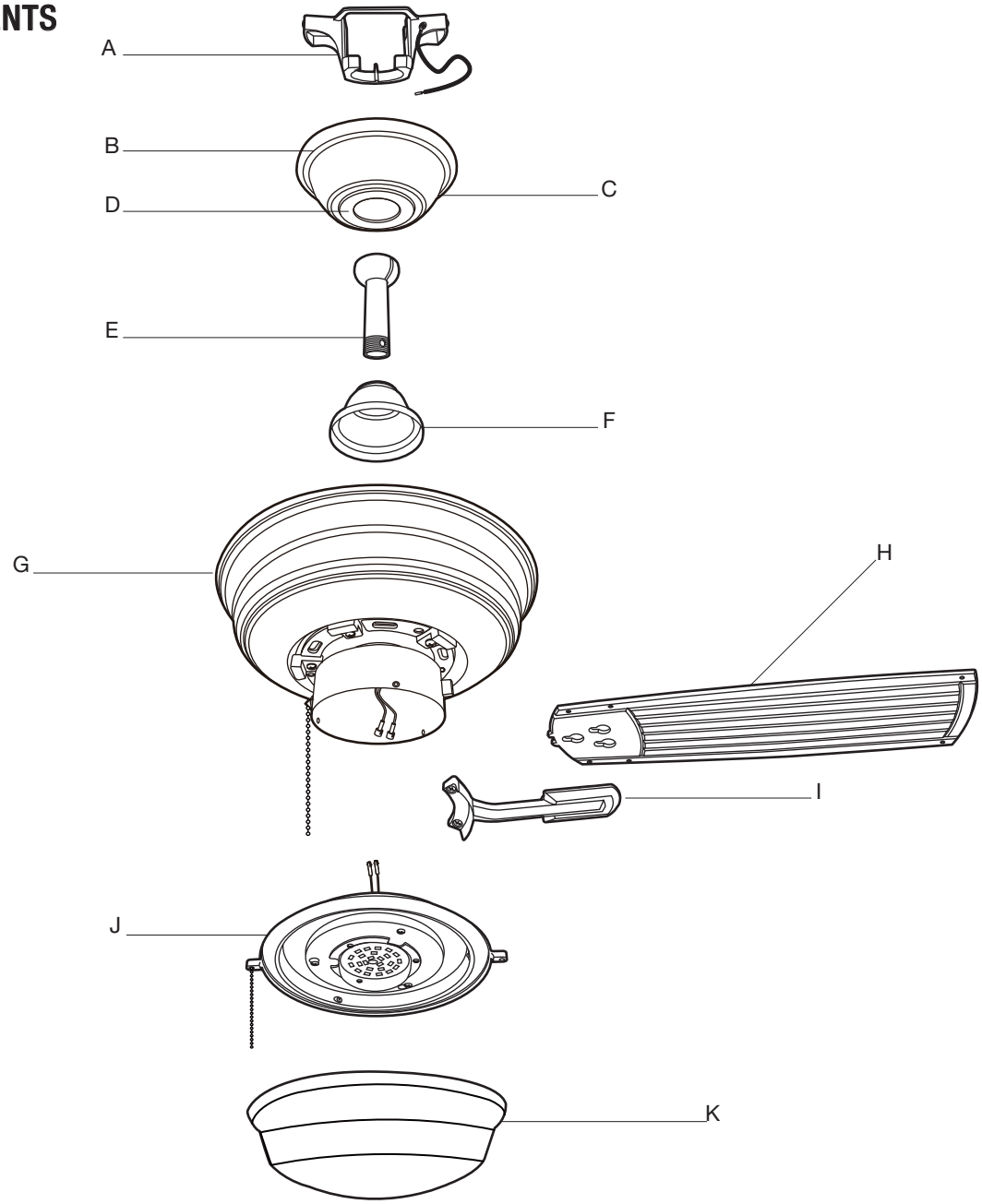

Part	Description	Quantity
A	Mounting bracket (preassembled)	1
B	Canopy ring (preassembled)	1
C	Canopy	1
D	Canopy bottom cover (preassembled)	1
E	Hanger ball/downrod assembly	1
F	Coupling cover	1

Part	Description	Quantity
G	Fan motor assembly	1
H	Blade	5
I	Blade arm	5
J	16 Watt LED light kit	1
K	Glass shade	1

DUAL MOUNTING INSTRUCTIONS

This ceiling fan is supplied with two types of hanging assemblies: the standard ceiling installation using the downrod with ball and socket mounting, and the "close-to-ceiling" mounting. The "close-to-ceiling" mounting is recommended in rooms with less than 8 ft. ceilings or in areas where additional space is desired from the floor to the fan blades.

When using the standard downrod installation, the distance from the ceiling to the bottom of the fan blades will be approximately 12 in. The "close-to-ceiling" installation reduces the distance from the ceiling to the bottom of the fan blades to approximately 9 in.

Once you have decided which ceiling installation you will use, refer to the corresponding sections and procedures during the assembly period. Where necessary, each section of the instructions will note the different procedures to follow for the two types of installation.

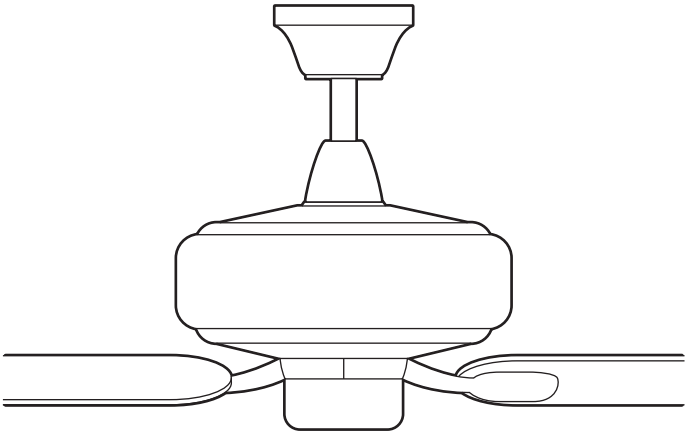

Standard Ceiling Mounting

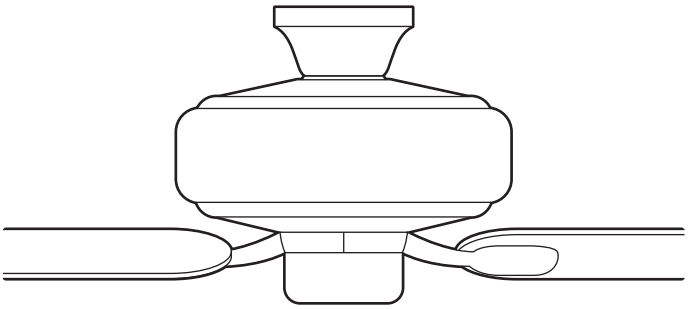

Close-to-Ceiling Mounting

MOUNTING OPTIONS

WARNING: To reduce the risk of fire, electric shock, or personal injury, mount the fan to an outlet box marked acceptable for fan support using the screws provided with the outlet box. An outlet box commonly used for the support of lighting fixtures may not be acceptable for fan support and may need to be replaced. If in doubt, consult a qualified electrician.

NOTE: You may need a longer downrod to maintain proper blade clearance when installing on a steep, sloped ceiling. The maximum angle allowable is 18° away from horizontal. If the canopy (C) touches the hanger ball/downrod assembly (E), then remove the decorative canopy bottom cover (D) and turn the canopy (C) 180° before attaching the canopy (C) to the mounting bracket (A).

If your ceiling fan does not have an existing UL-listed mounting box, then install one using the following instructions:

- ☐ Disconnect the power by removing the fuses or turning off the circuit breakers.
- ☐ Secure the outlet box (MM) (not included) directly to the building structure. Use appropriate fasteners and materials (not included). The outlet box and its bracing must be able to fully support the weight of the moving fan (at least 35 lbs.). Do not use a plastic outlet box.

The illustrations below show three different ways to mount the outlet box (MM) (not included).

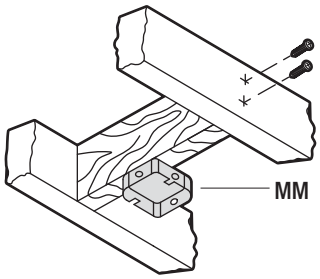

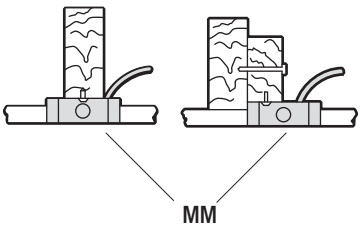

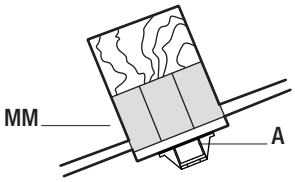

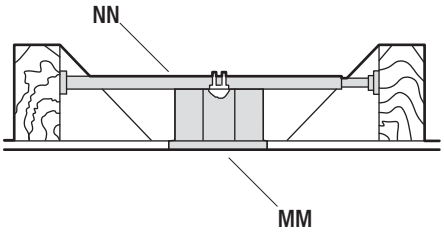

To hang your fan where there is an existing fixture but no ceiling joist, you may need an installation hanger bar (NN) (not included) as shown above.

Assembly — Standard Ceiling Mounting

1 Preparing the canopy

- ☐ Remove the canopy ring (B) from the canopy (C).
- ☐ Remove the two non-slotted mounting bracket screws (BB) from the canopy (C), and loosen the slotted mounting bracket screws (BB) on the canopy (C).
- ☐ Remove the canopy (C) from the mounting bracket (A) by turning the canopy (C) counterclockwise.

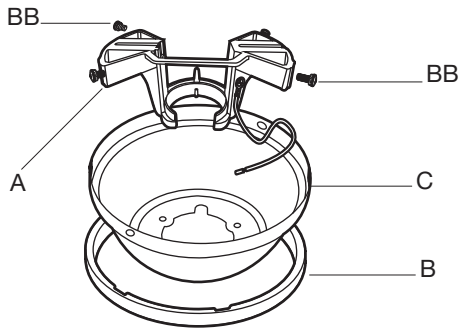

2 Preparing the motor

- ☐ Remove the clevis pin (CC) and cotter pin (DD), and loosen the two collar setscrews (GG) from the motor collar.
- ☐ Take out the setscrew (EE) located in the hanger ball (OO), lower the hanger ball and remove the cross pin (FF). Remove the hanger ball (OO) from the hanger ball/downrod assembly (E).

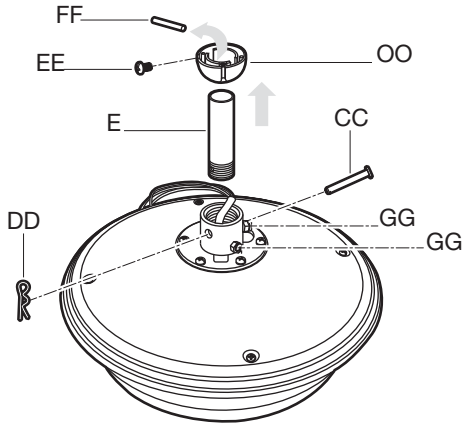

3 Assembling the fan

WARNING: Failure to properly install the cotter pin (DD) could result in the fan loosening and possibly falling.

NOTE: If a longer downrod (not included) is needed, take out the screw located in the hanger ball (OO), lower the hanger ball (OO) and remove the pin (FF). Remove all three pieces from the downrod and assemble them onto the new longer downrod before proceeding to the downrod installation.

- ☐ Carefully feed the motor wires up through the downrod (PP). Thread the downrod (PP) into the collar.
- ☐ Align the holes and replace the cotter pin (DD) and clevis pin (CC). Tighten the two collar setscrews (GG).
- ☐ Slip the coupling cover (F), canopy ring (B), and canopy (C) onto the downrod (PP).
- ☐ Carefully reinstall the hanger ball (OO) onto the downrod (PP), being sure that the cross pin (FF) is in the correct position, the setscrew (EE) is tightened and wires are not twisted.

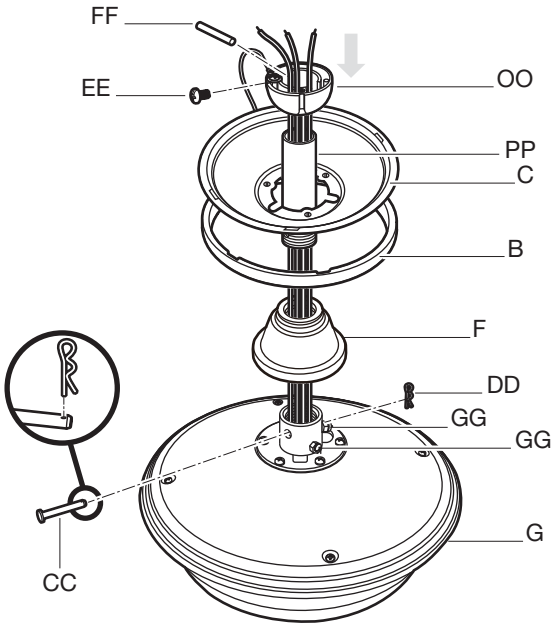

Assembly — Close-to-Ceiling Mounting

1 Preparing the canopy

- ☐ Remove the canopy ring (B) from the canopy (C).
- ☐ Remove the mounting bracket (A) from the canopy (C) by loosening the four canopy mounting bracket screws (BB) on the top of the canopy (C). Remove the two non-slotted canopy mounting bracket screws (BB) and loosen the slotted canopy mounting bracket screws (BB).
- ☐ Remove the canopy bottom cover (D) from the canopy (C).

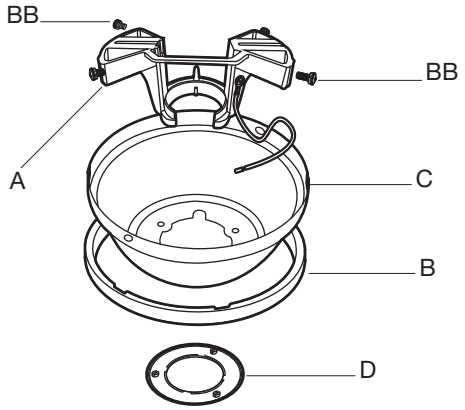

2 Preparing the motor

- ☐ Remove three of the six collar mounting screws with lock washers (HH) (every other one) from the collar on top of the fan motor assembly (G).

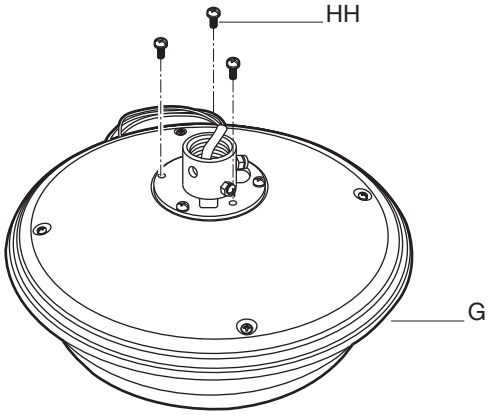

3 Assembling the fan

WARNING: Failure to completely tighten the three collar mounting screws (HH) could result in the fan becoming loose and possibly falling.

- ☐ Make sure the slot openings of the canopy ring (B) are on top, and then proceed to place the canopy ring (B) and canopy (C) over the collar at the top of the fan motor assembly (G).
- ☐ Align the mounting holes in the bottom of the canopy (C) with the holes in the top of the fan motor assembly (G). Fasten using the three collar mounting screws with lock washers (HH) previously removed.
- ☐ Tighten the collar mounting screws (HH) securely.

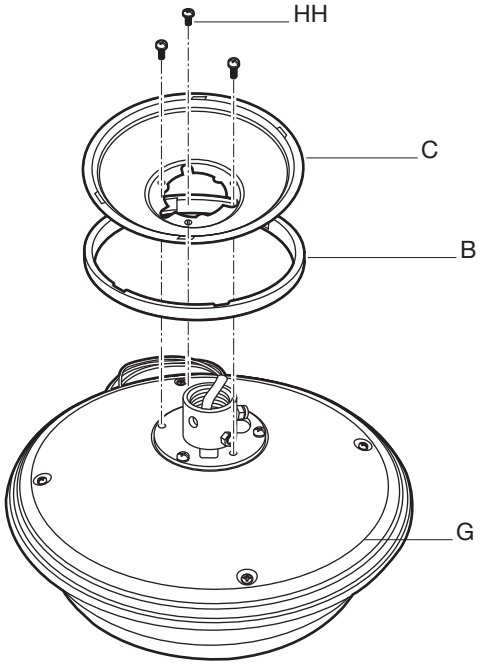

Assembly — Hanging the Fan

4 Attaching the fan to the electrical box

WARNING: To reduce the risk of fire, electric shock or other personal injury, mount the fan only to an outlet box or supporting system marked acceptable for fan support and use the mounting screws provided with the outlet box.

- ☐ Pass the 120-volt supply wires through the center hole in the mounting bracket (A).
- ☐ Attach the mounting bracket (A) on the outlet box (MM) by sliding the mounting bracket (A) over the screws provided with the outlet box. When using "close-to-ceiling" mounting, it is important that the mounting bracket (A) be level. If necessary, use leveling washers (not included) between the mounting bracket (A) and the outlet box (MM). Note that the flat side of the mounting bracket (A) is toward the outlet box (MM).
- ☐ Securely tighten the two mounting screws.

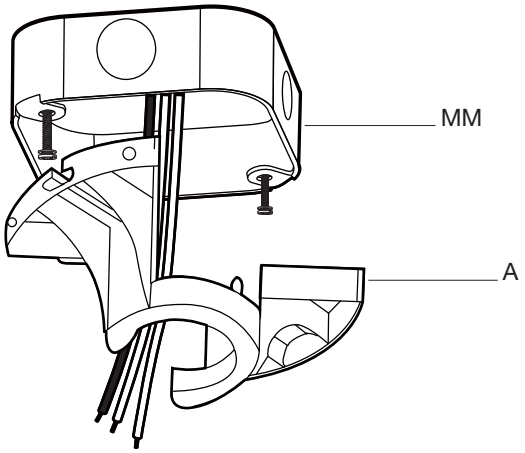

5a Hanging instructions for standard mounting

WARNING: The tab in the ring must rest in the groove of the hanger ball (E). Failure to properly seat the tab in the groove could cause damage to the wiring.

- ☐ Carefully lift the fan motor assembly (G) up to the mounting bracket (A) and seat the hanger ball (E) in the mounting bracket (A) socket. Make sure the tab on the mounting bracket (A) socket is properly seated in the groove in the hanger ball (E). This will help to balance the ceiling fan.

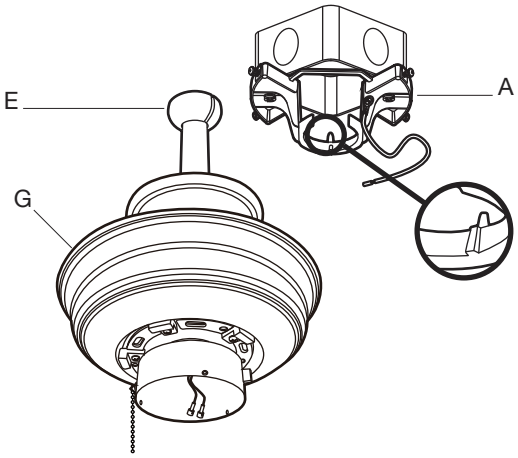

5b Hanging instructions for close-to-ceiling mounting

WARNING: The hook is only to hold the fan while attaching wiring. Failure to hang as instructed may result in the tab breaking causing the fan to fall. The hook must pass from the inside to the outside of the canopy.

- ☐ Carefully lift the fan motor assembly (G) up to the mounting bracket (A) and hang the fan on the hook provided using one of the holes at the outer rim of the canopy (C).

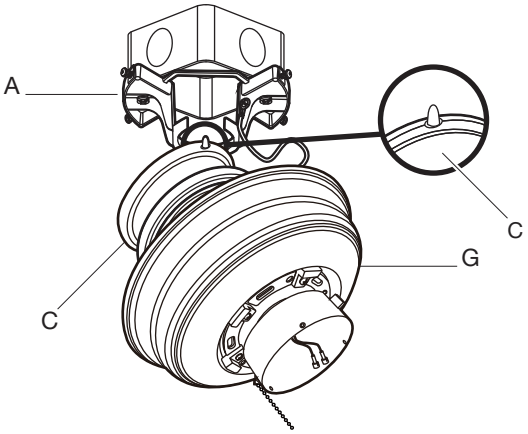

6 Making the electrical connections

WARNING: To avoid possible electrical shock, be sure electricity is turned off at the main fuse box before wiring.

WARNING: Check to see that all connections are tight, including ground, and that no bare wire is visible at the wire nuts (except for the ground wire).

WARNING: To reduce the risk of fire or electric shock, do not use this fan with any solid-state speed control device.

If you feel you do not have enough electrical wiring knowledge or experience, have your fan installed by a licensed electrician.

Follow the steps below to connect the fan to your household wiring. Use the plastic wire nuts (AA) with your fan. Secure the plastic wire nuts (AA) with electrical tape. Make sure there are no loose strands or connections.

- □ Connect the ground conductor of the 120V supply (this may be a bare wire or a wire with green colored insulation) to the green ground lead(s) of the fan. When using standard ceiling mounting, there are two green grounding leads: one from the mounting bracket (A) and one from the hanger ball/downrod assembly (E). When using “close-to-ceiling” mounting, there is only one green ground lead from the mounting bracket (A) since the hanger ball/downrod assembly (E) is not used.
- □ Connect the fan motor white wire to the supply white (neutral) wire using a plastic wire nut (AA).
- □ Connect the fan motor black wire and the blue wire to the supply black (hot) wire using a plastic wire nut (AA).
- □ Turn the wire nut connections upward, spreading them apart so the green (ground) will be on one side of the outlet box (MM) and the white, black and blue wire will be on the other side. Carefully tuck the connections up into the outlet box (MM).

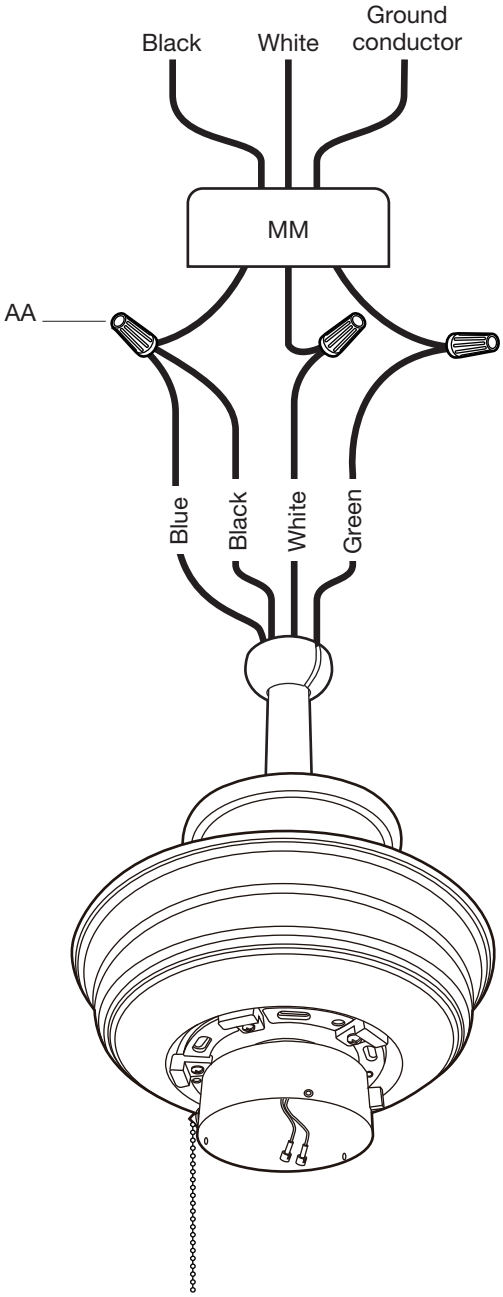

7a Standard ceiling mounting

WARNING: Make sure the tab on the mounting bracket (A) properly sits in the groove in the hanger ball (E) before attaching the canopy (C) to the mounting bracket (A) by turning the canopy (C) until it drops into place.

WARNING: The locking slots of the canopy (C) are provided only as an aid to mounting. Do not leave the fan assembly unattended until all four canopy mounting bracket screws (BB) are engaged and firmly tightened.

- ☐ Slide the canopy (C) up to the ceiling. Make sure you have placed the wires safely into the outlet box (MM).
- ☐ Secure the canopy (C) to the mounting bracket (A) with the four canopy mounting bracket screws and lock washers (BB) included with your fan.
- ☐ Slide the canopy ring (B) over the canopy (C) and tighten by turning the ring (B).

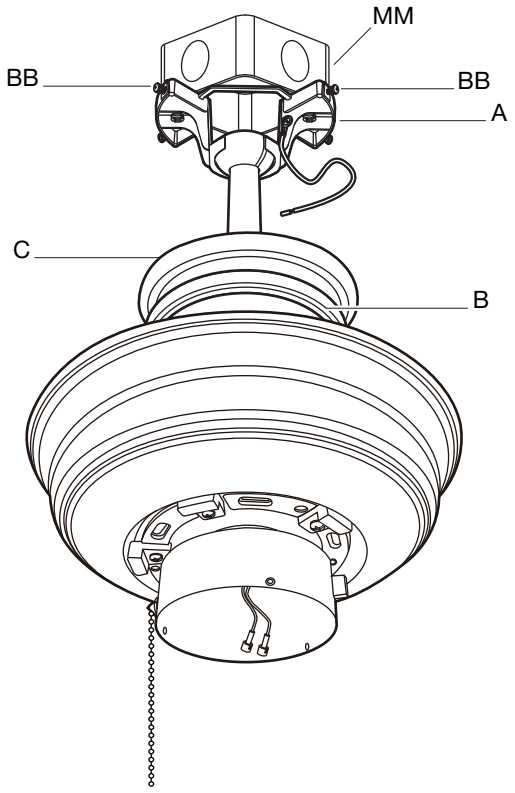

7b Close-to-ceiling mounting

WARNING: Locking slots of the canopy (C) are provided only as an aid to mounting. Do not leave the fan assembly unattended until all four canopy screws (BB) are engaged and firmly tightened.

- ☐ Remove the fan from the hook on the mounting bracket (A).
- ☐ Secure the canopy (C) to the mounting bracket (A) with the four mounting bracket screws with lock washers (BB) provided.
- ☐ Slide the canopy ring (B) over the canopy (C) and tighten by turning the ring (B).

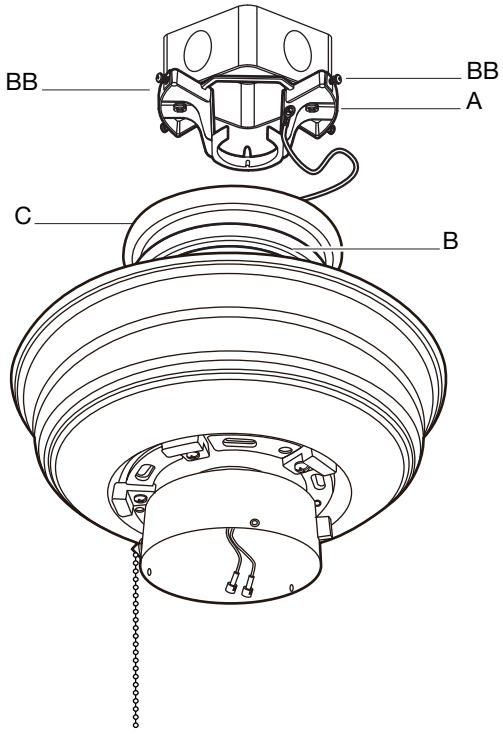

Assembly — Attaching the Fan Blades

8 Removing the rubber packing mounts

- The fan motor assembly (G) is shipped with rubber packing mounts (QQ) to prevent movement during transportation. Remove the five rubber packing mounts (QQ) from the fan motor assembly (G) and discard prior to attaching the blade arms.

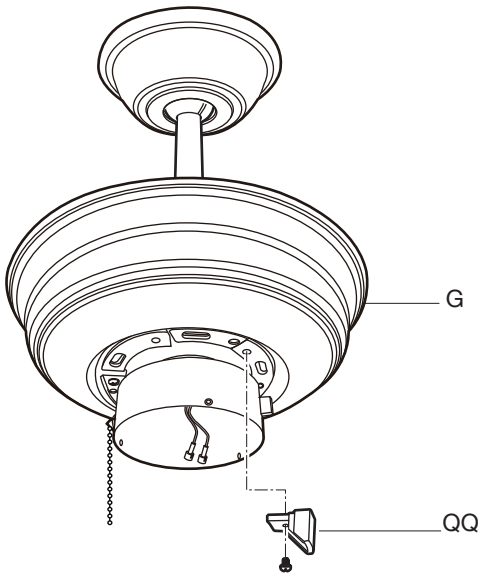

9 Attaching the blades to the blade arms

WARNING: Failure to properly seat the blades (H) on the blade arms (I) and engage in the spring locking mechanism (TT) could result in the fan blades (H) loosening and possibly falling.

To install the blade to the blade arm:

- Hold the blade (H) with hands close to the blade arm (I), align the key-slot holes (RR) with the blade arm posts (SS) and press the blade down firmly. Ensure the key-slot holes (RR) are properly seated on the blade arm posts (SS).
- Firmly slide the blade (H) away from the blade arm (I) until the blade (H) engages in the spring locking mechanism (TT). Make sure the spring of the spring locking mechanism (TT) is upward and the butt of the spring locking mechanism (TT) is against the edge of the blade.

To detach the blade from the blade arm:

- Press down the spring locking mechanism (TT) to release the blade (H) from the blade arm (I). Slide the blade (H) toward the blade arm (I) until the blade (H) disengages from the spring locking mechanism (TT). Carefully push the blade (H) up to detach from the blade arm (I).

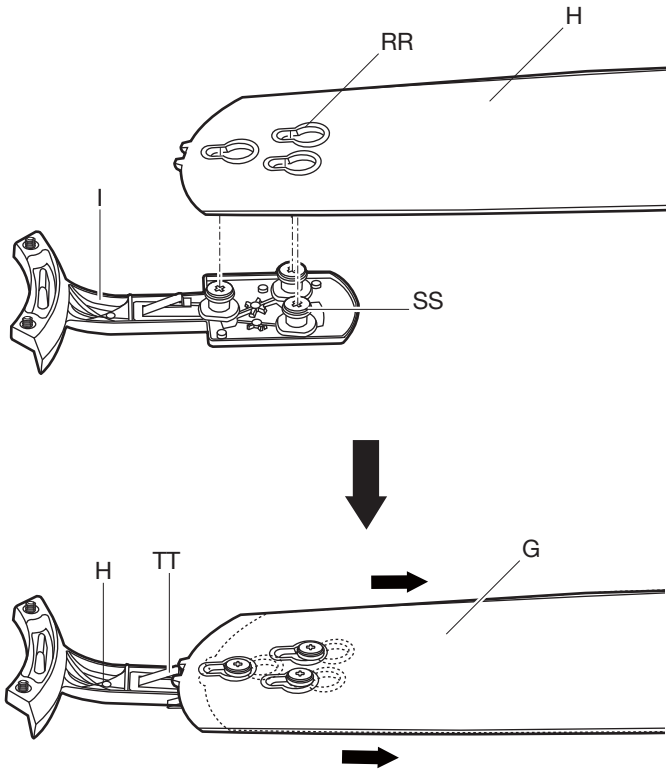

10 Fastening the blade assemblies to the motor

WARNING: To reduce the risk of personal injury, do not bend the blade arms (I) while installing, balancing the blades (H), or cleaning the fan. Do no insert foreign objects between rotating fan blades (H).

- ☐ Fasten the blade assemblies to the fan motor assembly (G) by lining up the slots of the motor (UU) with the tabs (VV) on the blade arms (I).
- ☐ Tighten the two blade arm screws with lock washers (II) already installed in the blade arms (I).
- ☐ Repeat this procedure for the remaining blade arms (I).

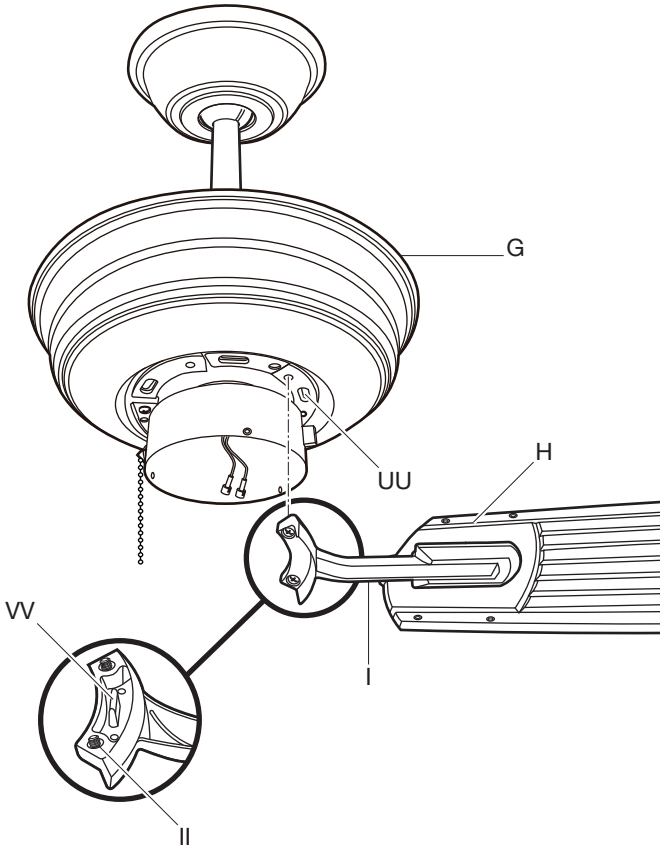

Assembly — Installing the Light Kit

11 Attaching the light kit to the switch housing

CAUTION: Before starting the installation, disconnect the power by turning off the circuit breaker or removing the fuse at the fuse box. Turning power off using the fan switch is not sufficient to prevent electric shock.

- ☐ Remove the three light kit mounting screws (JJ) from the LED light kit (J) and keep these screws.
- ☐ While holding the LED light kit (J) under your fan motor assembly (G), locate two single white and blue wires in the switch housing labeled "FOR LIGHT". Make the polarized plug connections:
  - White to white
  - Blue to black
- ☐ Carefully push all wires back into the switch housing. Install the light kit assembly (J) onto the switch housing with the three light kit mounting screws (JJ) removed previously. Be sure to tighten all screws.

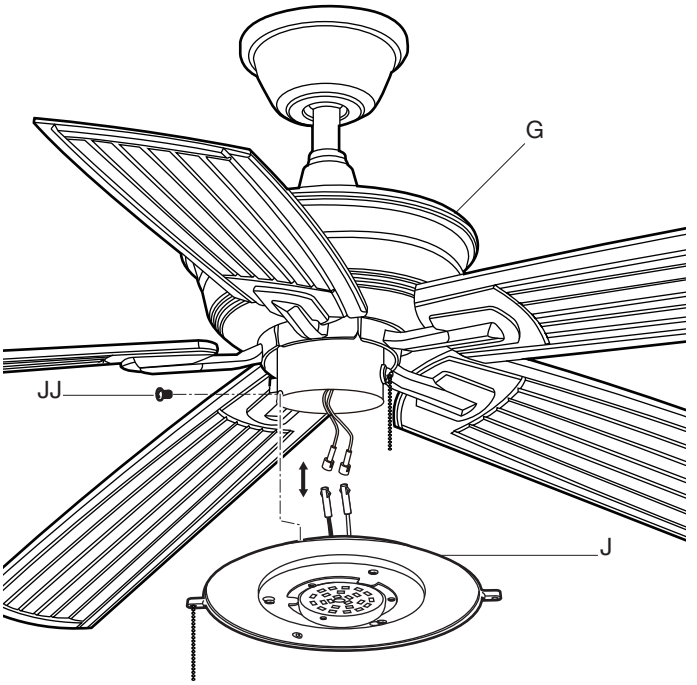

12 Mounting the glass shade

CAUTION: Before starting installation, disconnect the power by turning off the circuit breaker or removing the fuse at the fuse box. Turning power off using the fan switch is not sufficient to prevent electric shock.

- ☐ Raise the glass shade (K) up against the LED light kit (J) and secure the glass shade (K) to the fan by turning the glass shade (K) clockwise until snug. Do not overtighten.

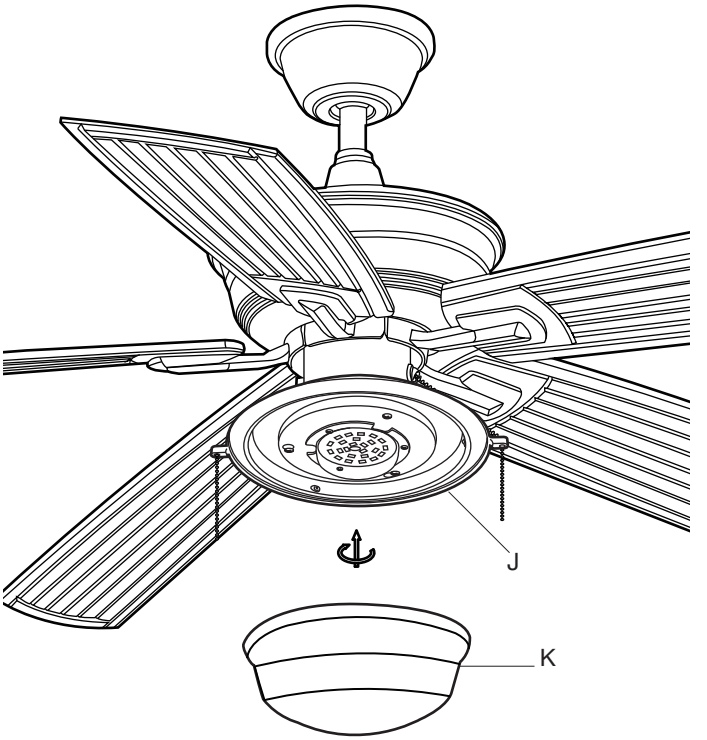

13 Installing the fan without the light kit (optional)

- ☐ Disassemble the switch housing cover (WW) from the LED light kit. You can keep the light kit for future use.
- ☐ Attach the plastic plug (LL) to the switch housing cover (WW).
- ☐ Install the switch housing cover (WW) to the switch housing with light kit mounting screws (JJ) provided.

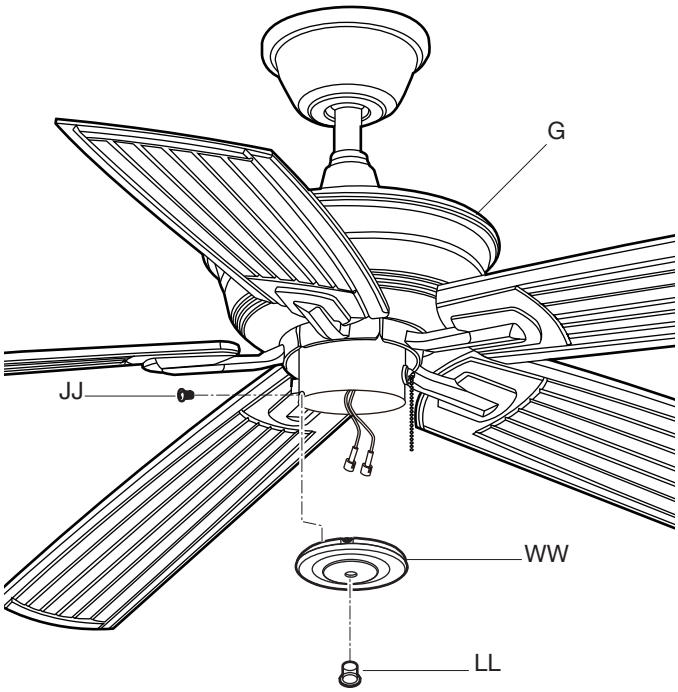

PULL CHAIN OPERATING INSTRUCTIONS

Install two pull chains and fobs (KK) onto the pull chains located in the switch housing and light kit (J). Turn on the power and check the operation of the fan.

The pull chain controls the fan speed as follows:
1 pull - High, 2 pulls - Medium, 3 pulls - Low, and 4 pulls - Off.

Speed settings for warm or cool weather depend on factors such as the room size, ceiling height, and number of fans.

To turn the light kit “ON” or “OFF”, pull the chain that is attached to the light kit (J).

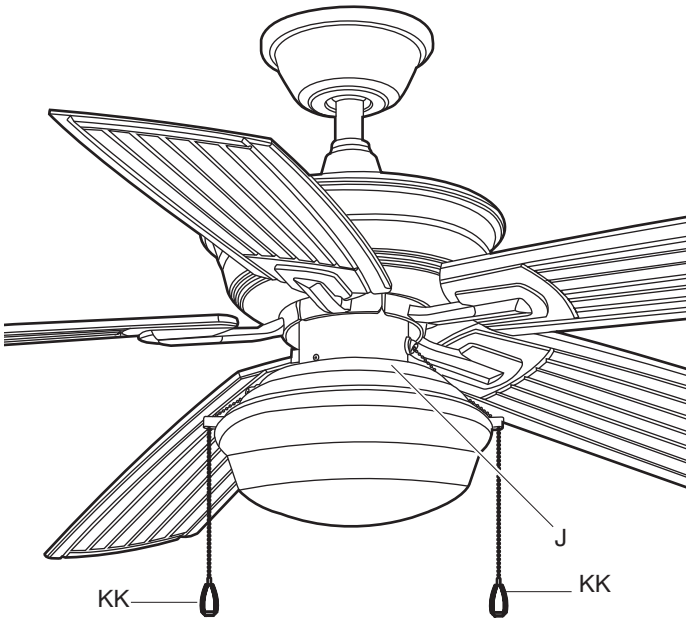

REVERSE SWITCH OPERATING INSTRUCTIONS

The reverse switch is located on the surface of the switch housing. This switch controls directions: forward (switch down) or reverse (switch up).

NOTE: Wait for the fan to stop before reversing the direction of the blade rotation.

Warm weather - (Counterclockwise Direction) A downward air flow creates a cooling effect. This allows you to set your air conditioner on a warmer setting without affecting your comfort.

Cool weather - (Clockwise Direction) An upward air flow moves warm air off the ceiling. This allows you to set your heating unit on a cooler setting without affecting your comfort.

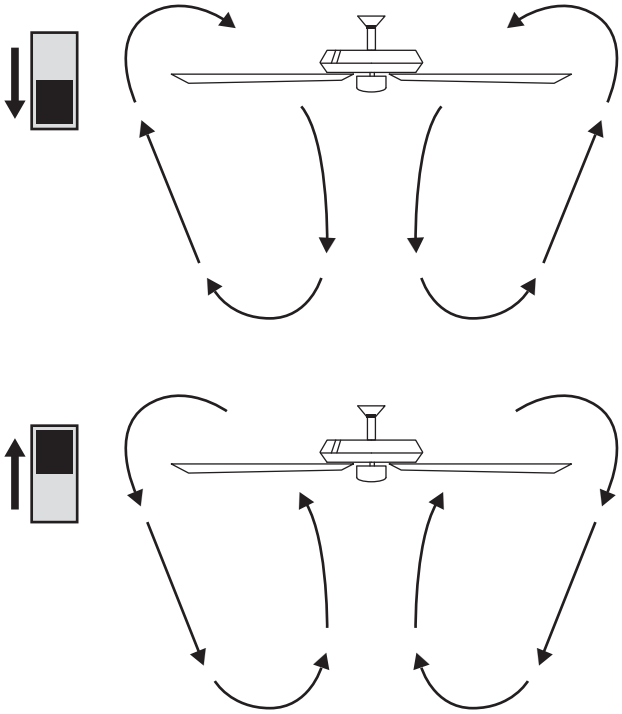

Care and Cleaning

Do
□ Check the support connections, brackets, and blade attachments twice a year. Make sure they are secure. Because of the fan's natural movement, some connections may become loose over time. It is not necessary to remove the fan from the ceiling.
□ Clean your fan periodically. Use only a soft brush or lint-free cloth to avoid scratching the finish. The plating is sealed with a lacquer to minimize discoloration or tarnishing.
□ (Optional) Apply a light coat of furniture polish to the wood blades.
□ (Optional) Cover small scratches with a light application of shoe polish.

Do not
□ Use water when cleaning. Water could damage the motor, or the wood, or possibly cause an electrical shock.
□ Apply oil to your fan or motor. The motor has permanently-lubricated sealed ball bearings.

Troubleshooting

WARNING: Make sure the power is off at the electrical panel box before you attempt any repairs. Refer to the section "Making the Electrical Connections" on page 12.

Problem	Solution
The fan will not start.	□ Check the main and branch circuit fuses or breakers.
	□ Check the line wire connections to the fan and switch wire connections in the switch housing.
The fan sounds noisy.	□ Make sure all motor housing screws are snug.
	□ Make sure the screws that attach the fan blade arm to the motor hub are tight.
	□ Make sure wire nut connections are not rattling against each other or the interior wall of the switch housing.
	□ Allow a 24-hour "breaking-in" period. Most noises associated with a new fan disappear during this time.
	□ If using the ceiling light kit, make sure the glassware is secured tightly.
	□ Make sure there is a short distance from the ceiling to the canopy. It should not touch the ceiling.
	□ Make sure your ceiling box is secure and rubber isolator pads are used between the mounting bracket and outlet box.

Troubleshooting (continued)

Problem	Solution
The fan wobbles.	☐ Verify that all blades and blade bracket screws are secure (most fan wobble problems are caused by loose parts). Once the fan is properly installed, run the ceiling fan for 10 minutes to let the fan self-adjust. If wobble occurs after running the fan for 10 minutes, verify blade level using the following process: - Select a point on the ceiling above the tip of one of the blades, then select any fan blade and measure from the center of the selected blade to the point on the ceiling. Rotate the fan until the next blade is positioned and repeat the measurement using the same point from the ceiling for every blade. Measurement deviations should be within 1/8 in.. - If all deviations are less than 1/8 in. and the fan continues to wobble, please call Customer Service (1-800-986-3460) to order a complimentary Blade Balancing Kit. - If deviation is greater than 1/8 in. , please call Customer Service (1-800-986-3460) to order complimentary replacements of your brackets.

Service Parts

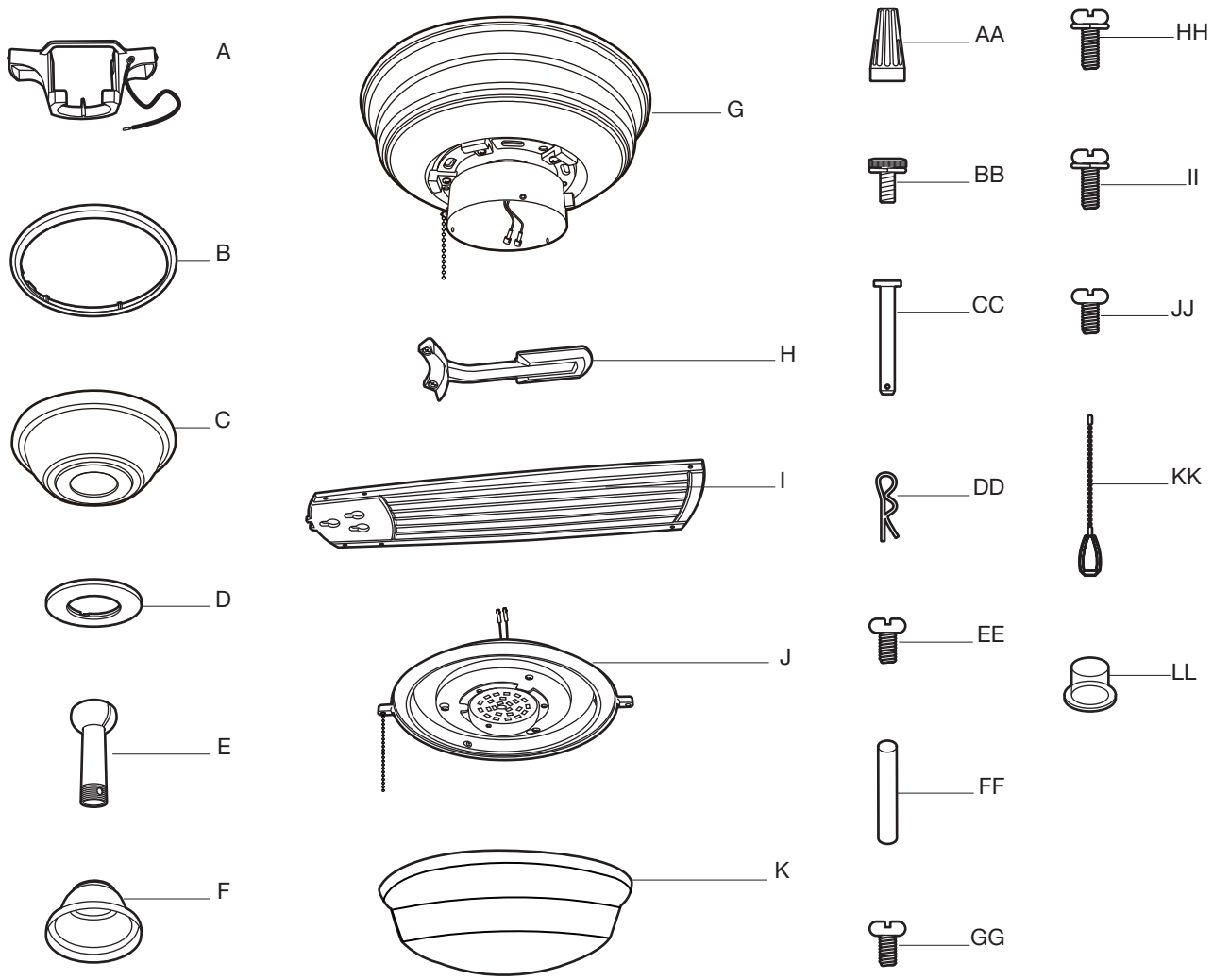

Part	Description
A	Mounting bracket (preassembled)
B	Canopy ring (preassembled)
C	Canopy
D	Canopy bottom cover (preassembled)
E	Hanger ball/downrod assembly
F	Coupling cover
G	Fan motor assembly
H	Blade
I	Blade arm
J	16 Watt LED light kit
K	Glass shade

Part	Description
AA	Plastic wire nut
BB	Canopy mounting screw with lock washer (preassembled)
CC	Clevis pin (preassembled)
DD	Cotter pin (preassembled)
EE	Cross pin (preassembled)
FF	Setscrew (preassembled)
GG	Collar setscrews (preassembled)
HH	Collar mounting screws with lock washers (preassembled)
II	Blade arm screw with lock washer (preassembled)
JJ	Light kit mounting screws (preassembled)
KK	Pull chains and fobs
LL	Plastic plug

HOME
DECORATORS
COLLECTION

Questions, problems, missing parts? Before returning to the store,
call Home Decorators Collection Customer Service
8 a.m. - 6 p.m., EST, Monday-Friday

1-800-986-3460

HOMEDEPOT.COM/HOMEDECORATORS

Retain this manual for future use.

AL499NI000001A