1

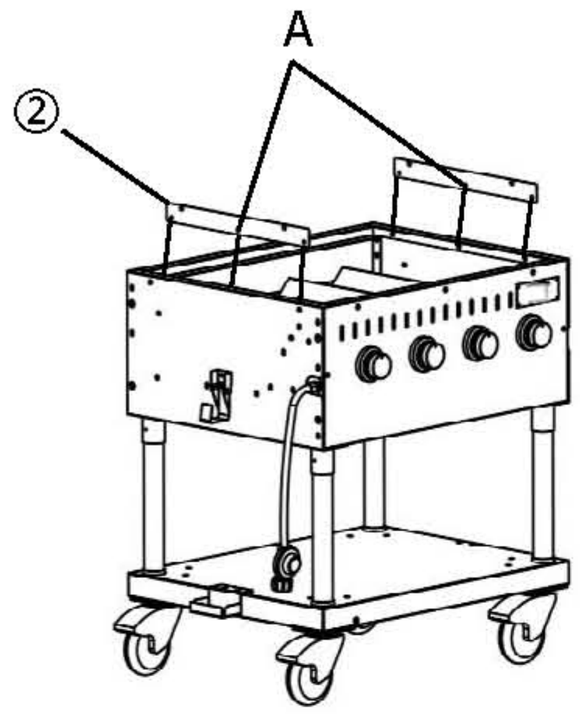

A		6PCS

2

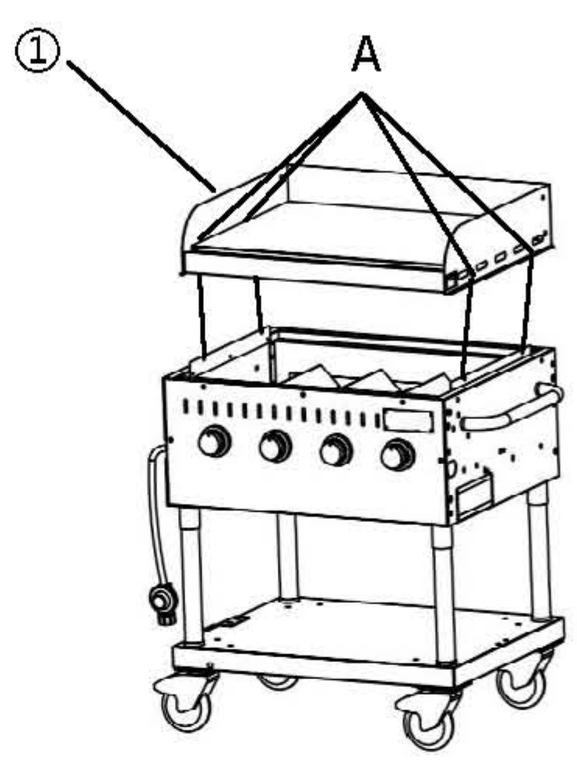

A	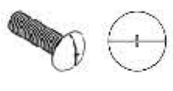	4PCS

3



① *1

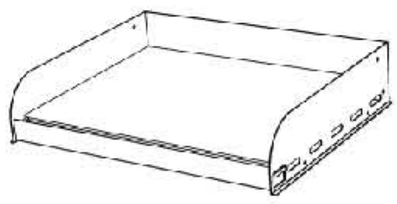

② *2

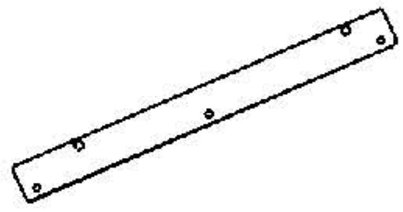

A M6X16*10

