Outdoor Privacy Screen

If the privacy screen will be used in a strong wind area,we highly recommend you using four Hex-Head Sleeve Anchors to fix the privacy screen on solid ground.

Before assembling, we recommend:

1. Wear Gloves.

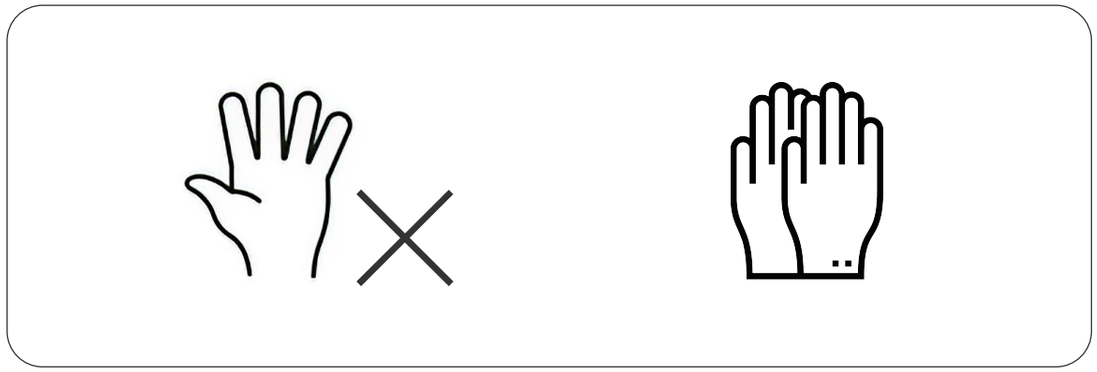

2. Don’t assemble the privacy screen on a Hard Surface.

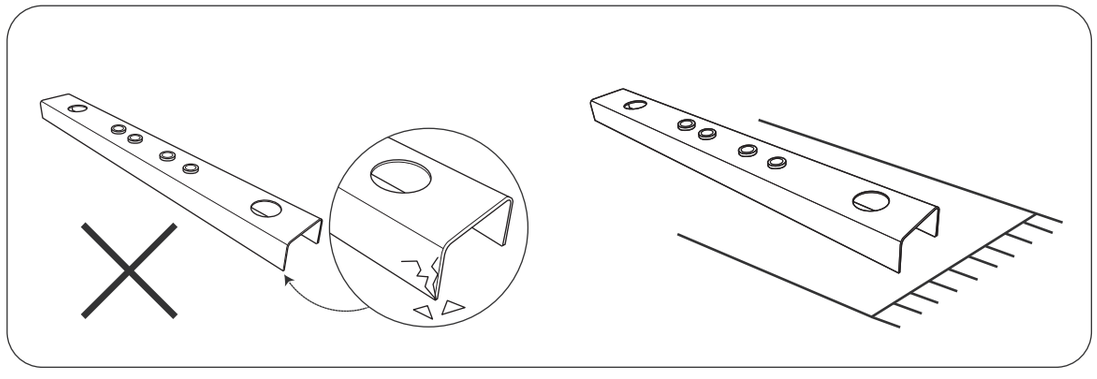

3. Ask for a Helping Hand.

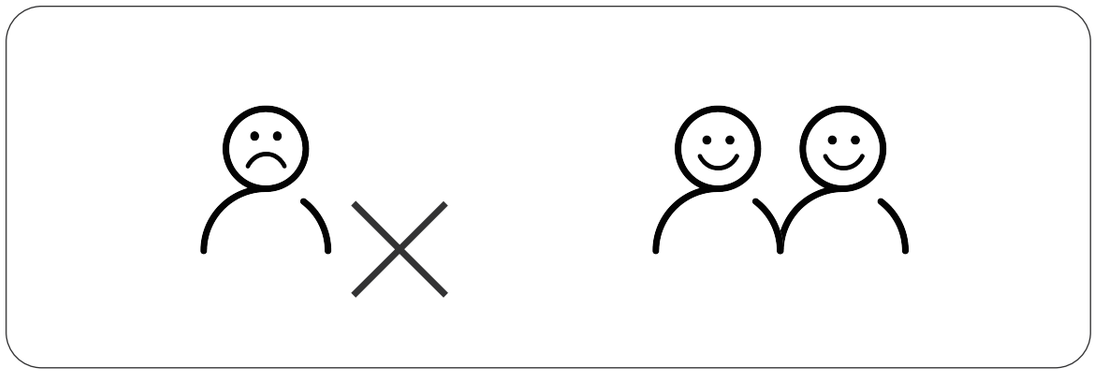

4. Use Hex-Head Sleeve Anchors to fix the privacy screen on solid ground if necessary.

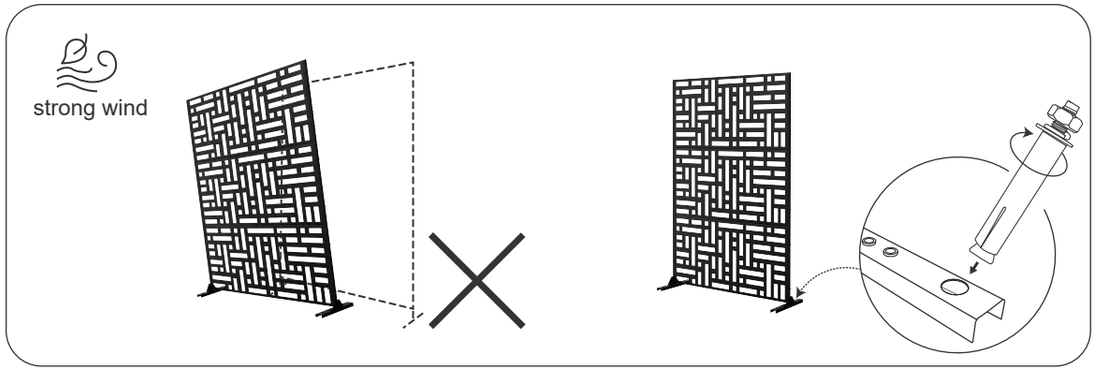

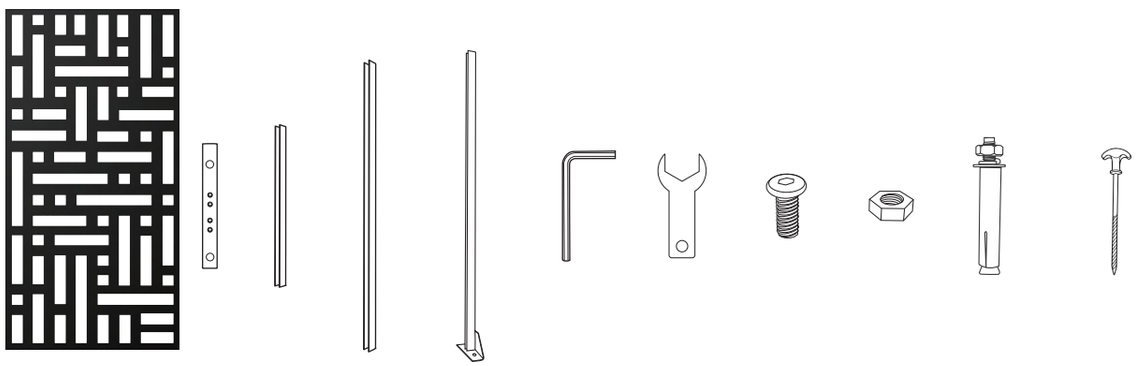

Ⓐ	Ⓑ	Ⓒ	Ⓓ	Ⓔ	Ⓕ	Ⓖ	Ⓗ	Ⓘ	Ⓙ	Ⓚ
3pcs	2pcs	(2pcs)*	2pcs	2pcs	1 pcs	1pcs	42pcs (+6pcs)*	38pcs (+4pcs)*	4pcs	4pcs

ps:“*”additional accessories
part Ⓒ for Vertical Installation only.

Design

We have various choices of pattern for you:



Quadra01	83% privacy

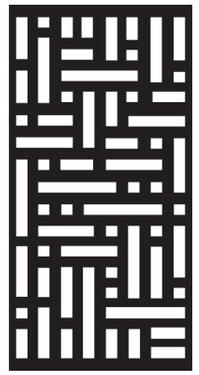

Block01	64% privacy

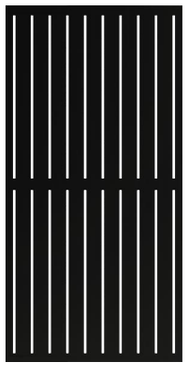

Louvered	86% privacy



Star01	83% privacy



Diagonal01	75% privacy



Web01	60% privacy

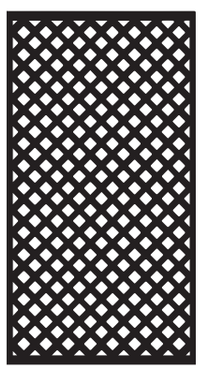

Cube	68% privacy



Flowleaf01	65% privacy

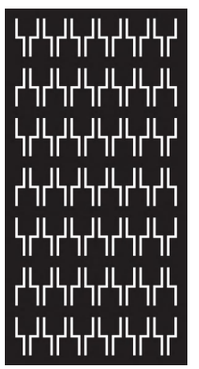

Brick01	86% privacy

Single Panel & Stand

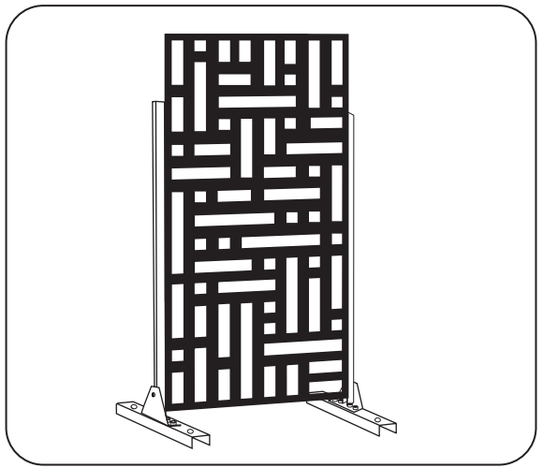

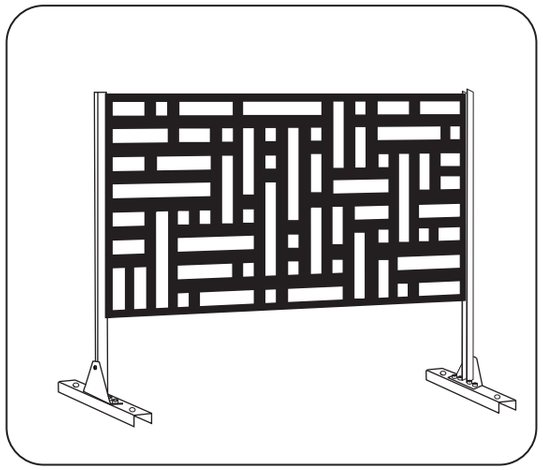

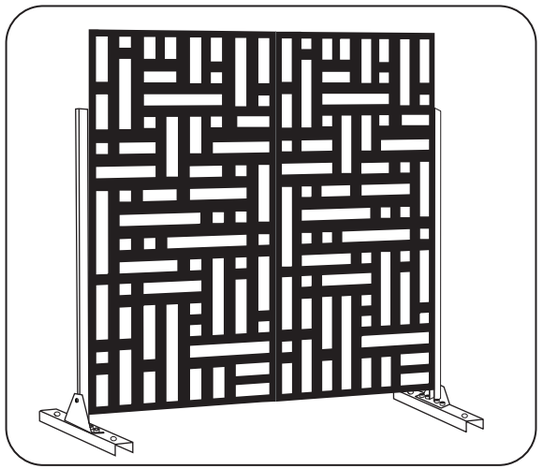

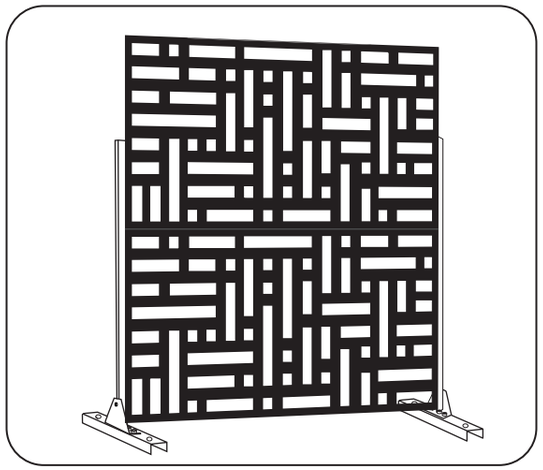

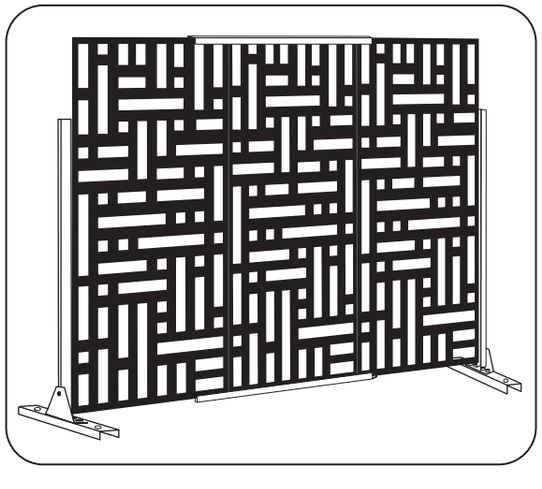

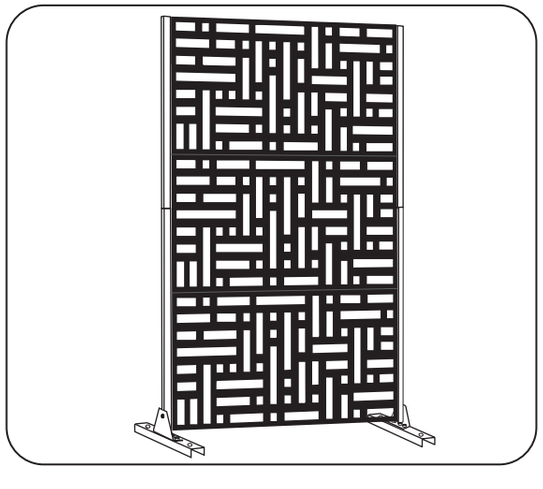

Vertical Installation (72"Height)

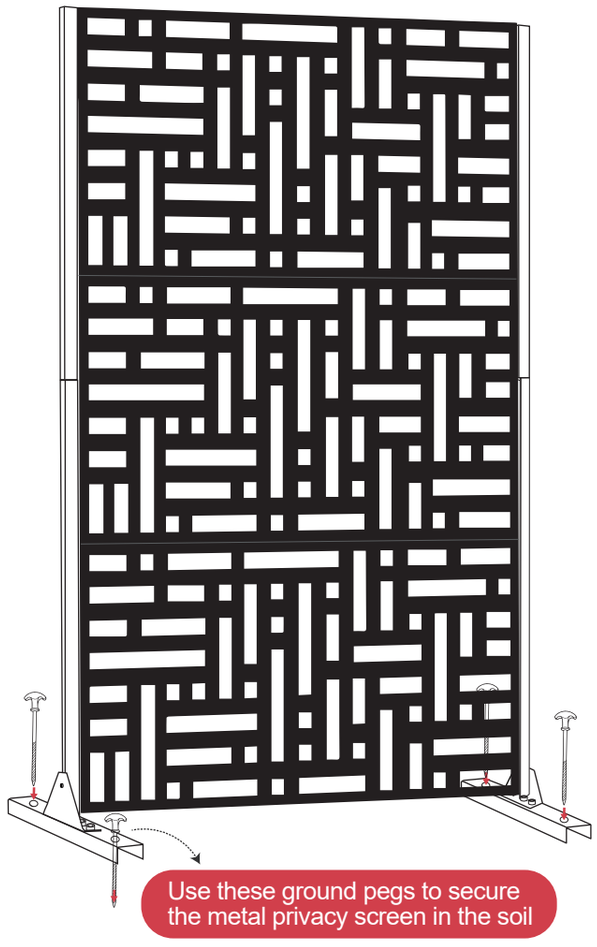

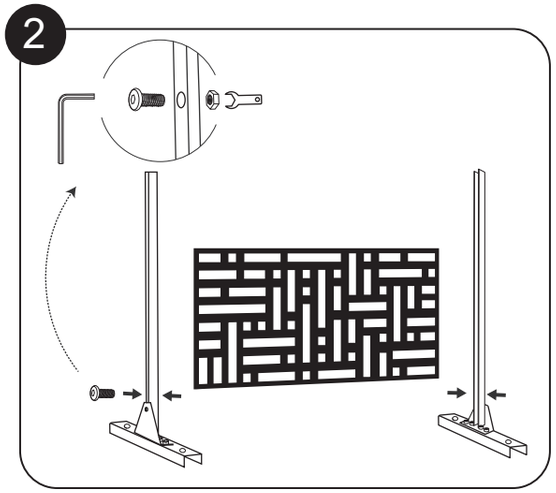

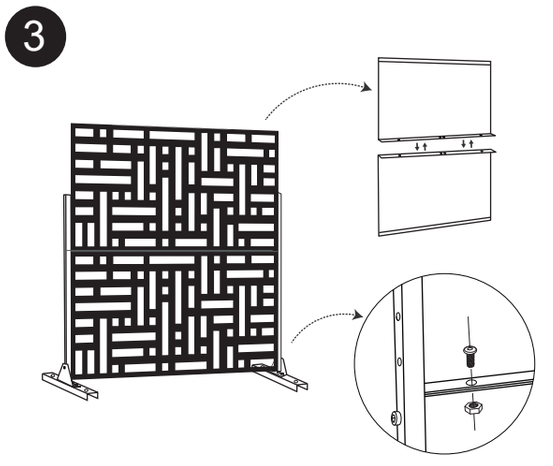

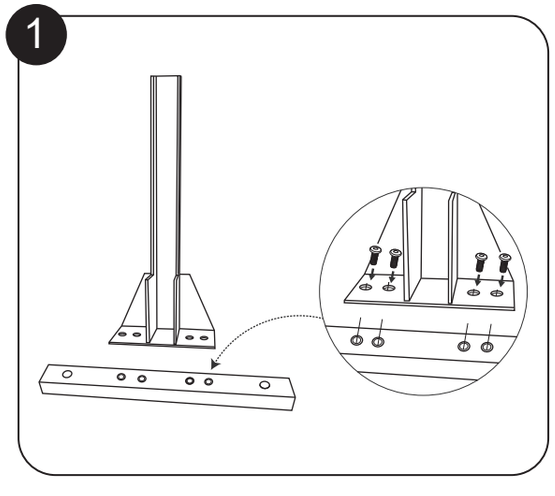

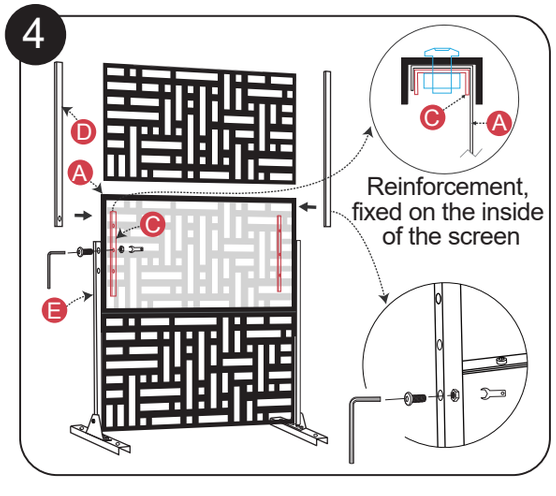

Vertical Installation (76"Height)

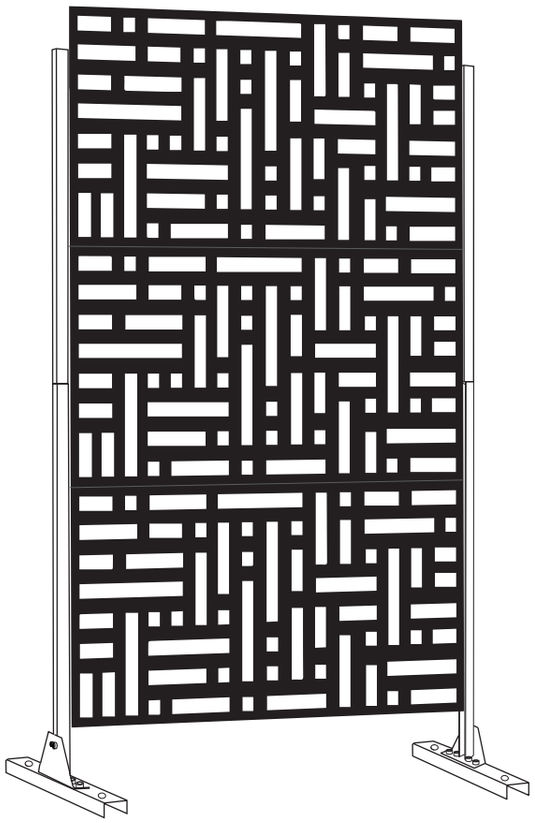

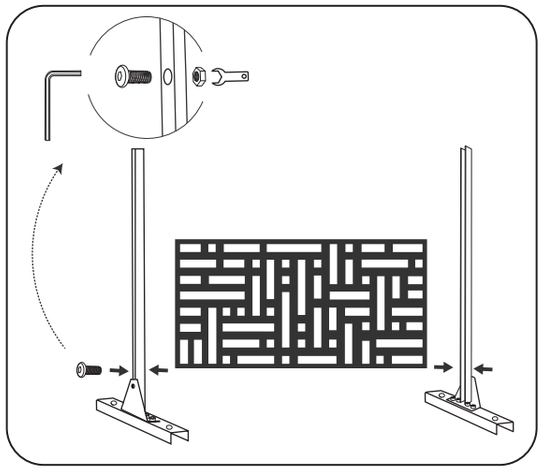

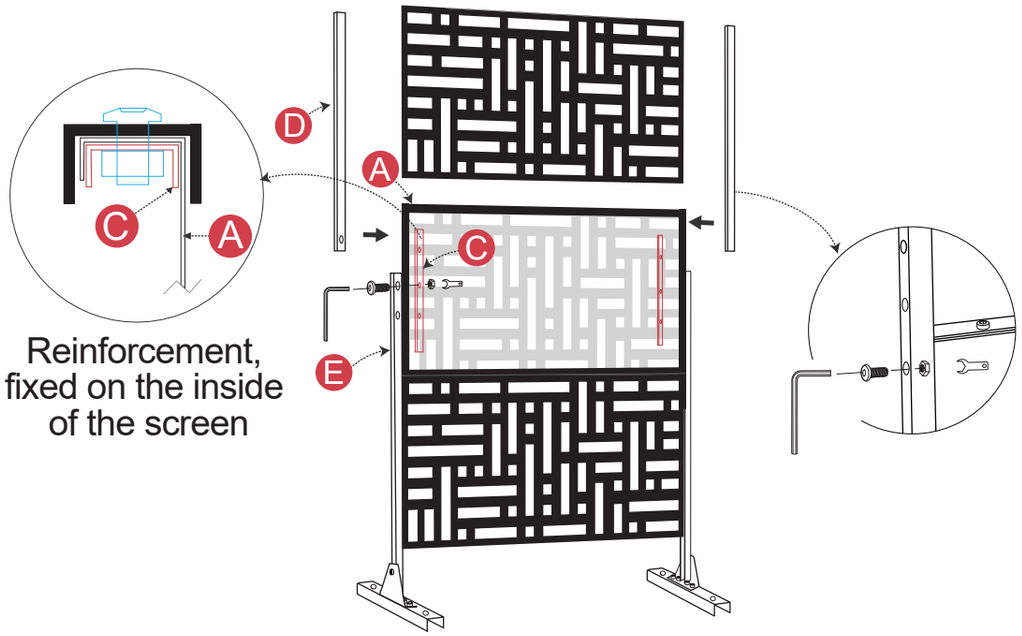

Reinforcement, fixed on the inside of the screen

Horizontal Installation

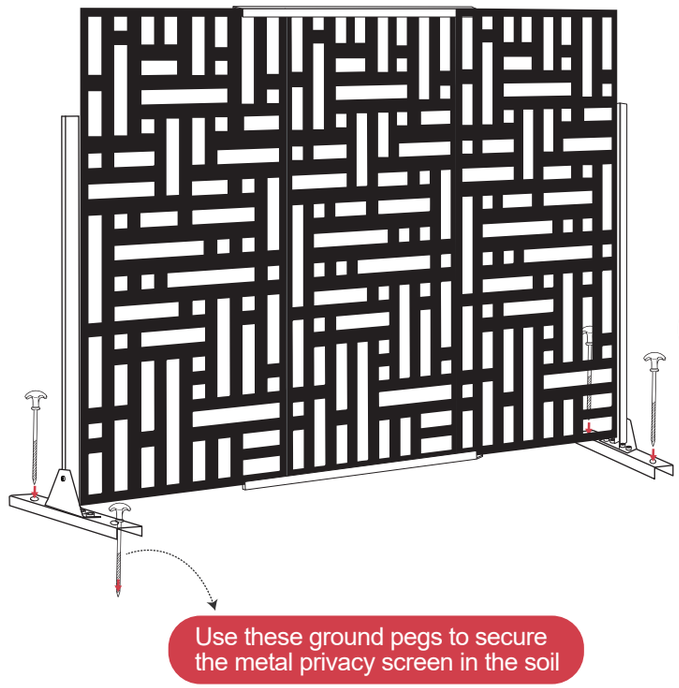

Use these ground pegs to secure the metal privacy screen in the soil

2

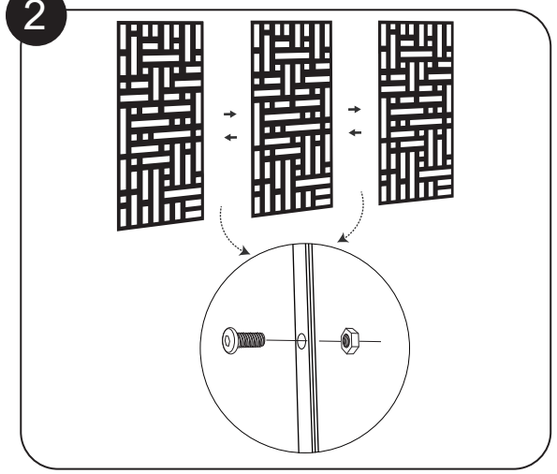

3

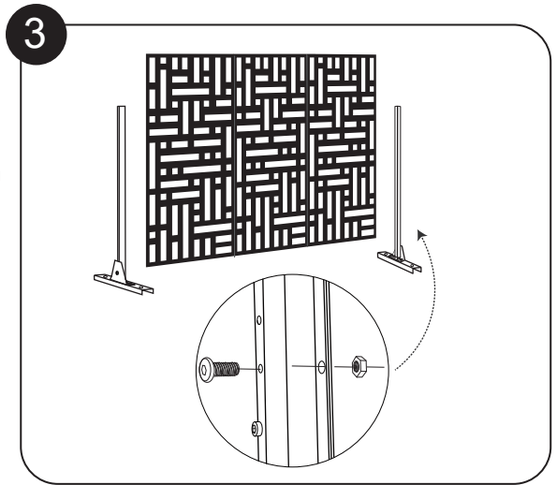

1

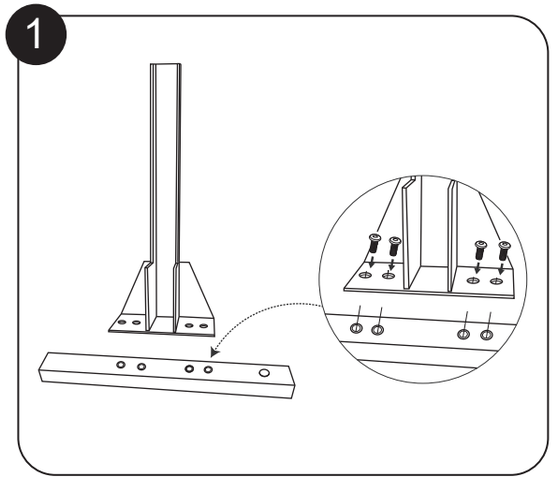

4

