EZ Replacement

www.EZreplacement.com

Customer Service Made EZ!

- User Friendly Interface
- Download Product Manuals
- Email your questions or concerns
- File Warranty Claim
- Follow-up within 24 Hrs
- Parts Ship within 48 Hrs.

Parts distribution made from our Carrollton, TX warehouse facility

ATTENTION!

Please do not return this product to the retailer.

If you are missing or have damaged parts please email contact@ezreplacement.com Or Call 877-477-2264

Deluxe Freestanding Carbon Fiber Patio Heater W/ Remote

Sku: 101014

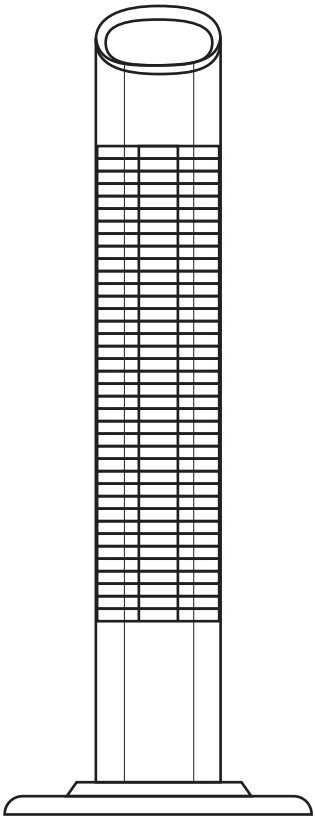

Read the instructions and precautions before use of this product

Please keep this instruction manual for future reference

For warranty information, please refer to the back page of this instruction manual.

Package Contents

A Heater x1	B Anti-Coverage Bracket x1	C Anti-Coverage Bracket Spacer 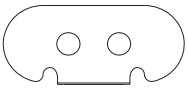 x1	D M4*12 Screw x2
E pressure plate x1	F ϕ6.5 gaskets 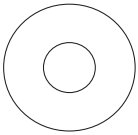 x2	G ST6*16 Screw x2	H M6*30 Screw x2
I base 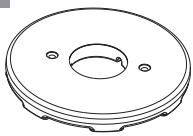 x1			

1

Placing Cord

Pass the cord through the hole in the middle of the chassis (as shown in the figure below).

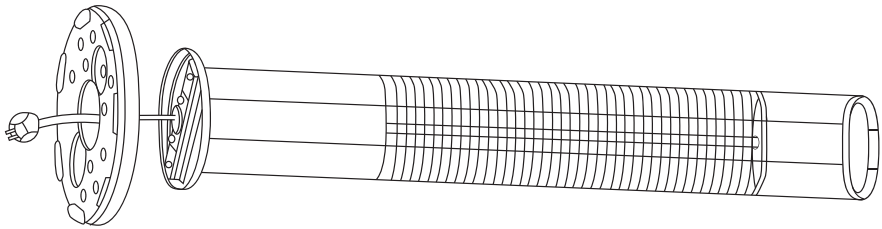

2

Attaching Chassis

Fasten the chassais and heater with two flat washers and screws. Then fasten the power to chassis with two screws and a crimping plaste (as show in the figure).

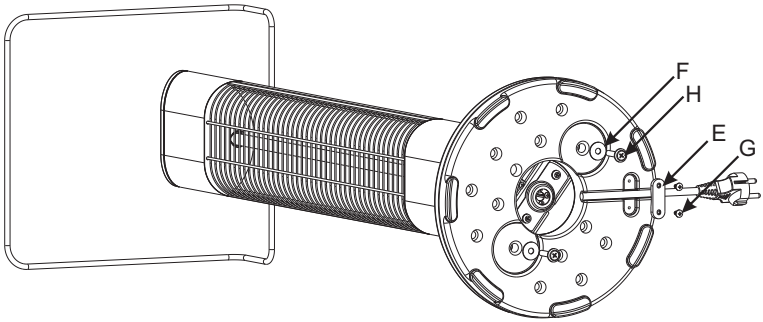

3

Bracket Installation

1. Take out the bracket sheet from the accerssory bag, place it in the card slot of the product backboard in a vertical direction, and it into the left and right grooves in a counterclockwise direction (See figure below).
2. Pus the bracket sheet to the top (See figure 2).
3. Place the bracket ring upward and tighten it with two M4*12 screws (See figure 3).

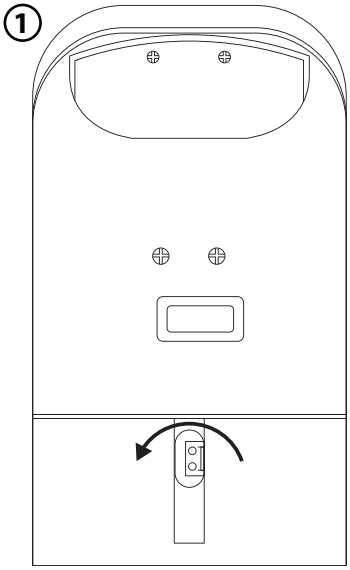

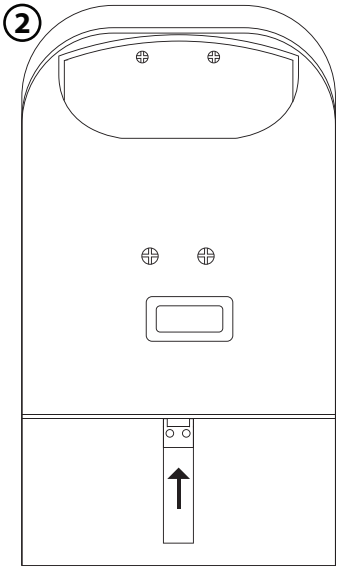

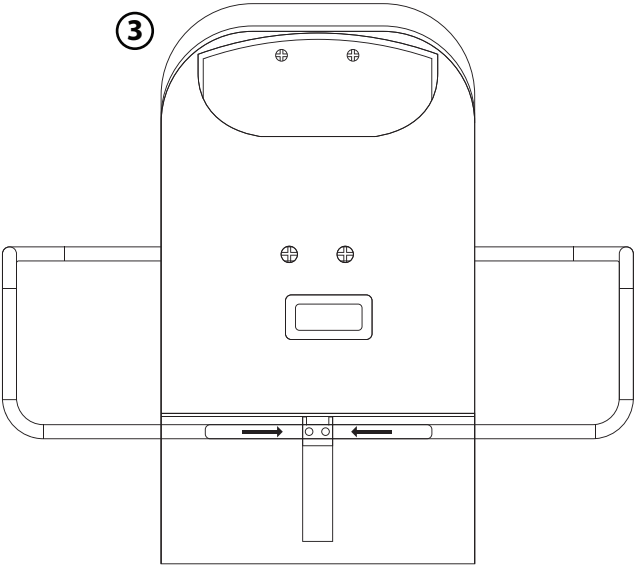

4. The product does not have corresponding screw holes, you need to use force to lock the bracket

4

Operating Instructions

The heater must provide the appropriate voltage and frequency (AC 120V, 60Hz), and be connected to a seperate, properly grounded branch circuit, protected by a circuit breaker that complies with the wiring rules. The position can only be operated when the heater is in an upright position.

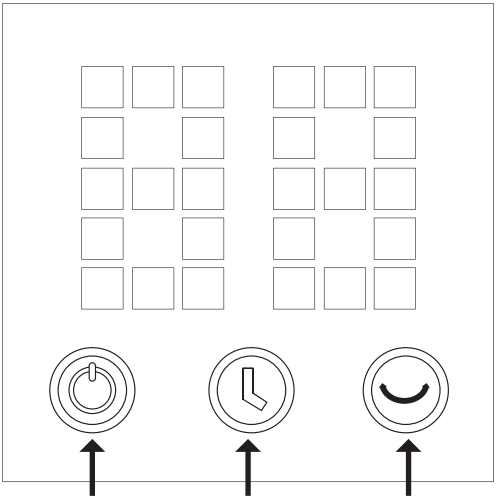

Power Button Timing Key Oscillating Head

ONE:

1. Press the main swith key of the product, and the blue indicator light of the touch key icon lights up, and the display does not display.

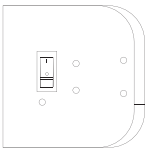

1. Touch the switch key and press once, the blue indicator light remains unchanged, P0 is displayed, and the product does not work.
2. Touch the power button and press 2 times, the blue indicator light turns red, F1 is displayed, and the product starts to work.
3. By analogy, there are nine levels in total, that is, touch the switch key and press 10 times, the indicator light is red and F9 is displayed.
4. Touch the switch key and press 11 time, the indicator light turns blue and P0 is displayed.

Two:

1. Touch the timming key and press once, the blue indicator light remains unchanged, and display shows 00

5

2. Touch the power button and press twice, the blue indicator light turns red, and the display shows 01
3. Touch the timer key and press 3 times, the indicator light is red, and the display shows 02
4. By analogy, the timming is 24 hours.
5. Touch the oscillating head key and press it once, the oscillating head function is turned on, and the product starts to rotate.

Remote Control Operation

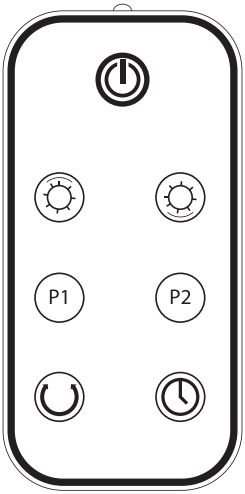

1. Press the remote control swith, the display shows P0
2. Press the key 1 time, that is, the first gear, the blue indicator light of the touch screen key turns red, and the display show F1, which is 10% of the total power.
3. Press the key 2 times, that is, the second gear, the touch screen key indicator is red, and the display shows F2, that is.
4. And so on. A total of nine gears.
5. Press the key to downshift.
6. Press the button P1 once for half of the total power. The display shows P1
7. Press the button twice for the full range of the total power. The display shows P2.
8. Touch the oscillating head key and press it once, the oscillating head function is turned on, and the product starts to rotate.

Maintenance & Storage

Maintenance:

• Turn off the circuit breaker before maintenance and let the unit cool completely.
• To keep heater clean, the outer shell may be cleaned with a soft, damp cloth. You may use a mild detergent if necessary. After cleaning, dry the unit with a soft cloth.
• DO NOT use alcohol, gasoline, abrasive powders, furniture polish, or rought brushes to clean the heater. This may cause damage or deterioration to the surface of the heater.
• Although this heater is outdoor approved (balconies and patios). DO NOT immerse the heater in water for your safety. Wait until the unit is completely dry before use.

Storage:

If the heater will not be used for a long period of time, store it in a cool, dry location when not in use To prevent dust and dirt build-up, use the original packaging to repack unit.

Trouble Shooting:

If the heater will not operate, please check the following before seeking repair of service:
• Check if electricity to the main fuse is working.
• Make certain the power switches are turned on. If not, choose a setting.

Specifications

Voltage Rating	120V ~ (60 Hz)
Power Comsumption	1500W
Unit Size	275 x 275 x 1025mm

Important Instructions

1. Do not use the heater with a programmer, timer, separate remote-control system or any other device that switches the heater on automatically, since a fire risk exists if the heater is covered or positioned incorrectly.
2. It's dangerous to install the appliance close to curtains and other combustible materials.
3. Do not use the heater in reach of a shower, bath or a swimming pool.
4. Heater is not located immediately below a socket-outlet.
5. If the supply cord is damaged, it must be replaced by the manufacturer, its service agent or a similarly qualified person in order to avoid a hazard.
6. In order to avoid overheating, do not cover the heater.
7. This appliance can be used by children aged from 8 years and above and persons with reduced physical, sensory or mental capabilities or lack of experience and knowledge if they have been given supervision or instruction concerning use of the appliance in a safe way and understand the hazards involved children shall not play with the appliance. cleaning and user maintenance shall not be made by children unless they are older than 8 and supervised.
8. Keep the appliance and its cord out of reach of children less than 8 years.
9. WARNING: This heater is not equipped with a device to control the room temperature. Do not use this heater in small rooms when they are occupied by persons not capable of leaving the room on their own, unless constant supervision is provided.
10. Pay attention that, no combustible material due to Wind or other environmental influences covers or obstructs the appliance, such as curtains, marquees, flags, plastic foil etc.
11. CAUTION – Some parts of this product can become very hot and cause burns. Particular attention has to be given where children and vulnerable people are present.

When using this electric unit, basic safety precautions should be followed to reduce the risk of fire, electric shock, and injury to persons, including the following:

1.Read ALL instructions before using this unit.

2. CAUTION: Risk of Electric Shock. DO NOT open or try to repair the heater yourself.

3. This heater may get hot when in use. To avoid burns, DO NOT let bare skin touch hot surfaces. If provided, use handles when moving this heater.

4. Keep combustible materials, such as furniture, pillows, bedding, paper, clothes, and curtains at least 3 ft from the front of the heater and keep them away from the sides, top, and rear. DO NOT place towels or other objects on the heater.

5. Extreme caution is necessary when any heater is used by or near children or the disabled, or when the heater is left operating and unattended.

6. DO NOT operate any heater with a damaged cord or after the heater malfunctions, has been drooped or damaged in any manner. Return heater to authorized service facility for examination, electrical or mechanical adjustment, or repair.

7. This heater is not intended for use in bathrooms, laundry areas and similar indoor locations. NEVER locate heater where it may fall into a bathtub or other water container. To protect against electrical hazards, DO NOT immerse in water or other liquids.

8. DO NOT touch the control panel with a wet hand.

9. DO NOT run cord under carpeting. DO NOT cover cord with throw rugs, runners, or similar coverings. Arrange cord away from traffic area and where it will not be tripped over.

10. DO NOT insert or allow foreign objects to enter any ventilation or exhaust opening as this may cause an electric shock or fire, or damage the heater.

Important Instructions Continued

11. To prevent a possible fire, DO NOT blocks the air intakes or exhaust in any manner. DO NOT use on soft surfaces, like a bed, where openings may become blocked.
12. A heater has hot and arcing or sparking parts inside. DO NOT use in areas where gasoline, paint, explosive and/or flammable liquids are used or stored. Keep unit away from heated surfaces and open flames.
13. Avoid the use of an extension cord because the extension cord may overheat and cause a risk of fire. However, if you have to use an extension cord, the cord shall be 1.5mm^2 minimum size.
15. To disconnect heater, turn controls to Off.
16. Always turn off the unit before moving or cleaning, or whenever the heater is not in use.
17. Use only for intended household use as described in this manual. Any other use not recommended by the manufacturer may cause fire, electric shock, or injury to persons. The use of attachments not recommended or sold by unauthorized dealers may cause hazards.
18. WARNING: To reduce the risk of fire or electric shock, DO NOT use this unit with any solid-state speed control device.
19. DO NOT attempt to repair or adjust any electrical or mechanical functions on this unit. Doing so will void your warranty. The inside of the unit contains no user serviceable parts. Qualified personnel should perform all servicing only.
20. Connect to properly grounded outlets only.
21. This appliance is not intended for use by persons (including children) with reduced physical. Sensory or mental capabilities, or lack of experience and knowledge, unless they have been given supervision or instruction concerning use of the appliance by a person responsible for their safety.
22. Children should be supervised to ensure that they do not play with the appliance.
23. The marketing concerning covering shall be visible after the heater has been installed.
24. Save these instructions

Purchase Information For Warranty

Fill Out Purchase Information

Product SKU #	_____
Date Of Purchase	_____
Purchased At	_____

Notes:

_____

_____

_____

_____

_____

_____

_____

Warranty Claim Instructions
Please use the link below to go to our warranty replacement website to fill out our Warranty Claim questionnaire. Please provide any photo(s) of the defective issue. NOTE- If you have a solar product that is not working correctly as it should, please provide photos of the product not working correctly at sunset/nighttime. If you received a product that was damaged, please take a photo(s) of the all the damages as well as the box that the product shipped in. You can either attach your photo(s) to your warranty claim (which will be located at the bottom of the page), or you can email the photo(s) to contact@ezreplacement.com. If you are missing an item(s)/hardware, you will not need to provide a photo(s) you will just need to fill out the warranty claim.

Limited Warranty

J & J Global, LLC (Seller) warrants to the original Buyer only, that each product will be free from defects in material and workmanship for a period of one (1) year from date of purchase. SELLER'S SOLE OBLIGATION AND BUYER'S EXCLUSIVE REMEDY UNDER THIS LIMITED WARRANTY SHALL BE THE REPAIR OR REPLACEMENT OF PARTS, WITHOUT CHARGE, WHICH ARE DEFECTIVE IN MATERIAL OR WORKMANSHIP. ANY PARTS AS DETERMINED BY THE SELLER WHICH HAVE BEEN MISUSED; ABUSED OR DAMAGED EITHER DIRECTLY OR INDIRECTLY FROM REPAIRS OR ALTERATIONS ATTEMPTED BY UNAUTHORIZED PERSON; IMPROPER MAINTENANCE, NEGLECT OR ACCIDENT ARE NOT COVERED BY THIS LIMITED WARRANTY. This warranty does not apply to damage, heat-induced coloration changes, scratching or alteration due to normal use or weathering. To make a claim under this Limited Warranty, email contact@ezreplacement.com or visit www.ezreplacement.com for warranty questions and claims.

Additional Limitations

THIS LIMITED WARRANTY DOES NOT APPLY TO ACCESSORY OR CONSUMABLE ITEMS RELATED TO THIS PRODUCT. ALL IMPLIED WARRANTIES SHALL BE LIMITED IN DURATION TO ONE (1) YEAR FROM DATE OF PURCHASE. IN NO EVENT SHALL SELLER BE LIABLE FOR ANY INCIDENTAL OR CONSEQUENTIAL DAMAGES, INCLUDING BUT NOT LIMITED TO LIABILITY FOR LOSS OF PROFITS, ARISING FROM THE SALE OR USE OF THIS PRODUCT.

If any provision of this Limited Warranty is for any reason held to be invalid or unenforceable, such provision shall not affect any other provision herein, this Limited Warranty shall be construed as if such invalid and/or unenforceable provision had never been contained herein.

This warranty gives you special legal rights, and you may also have other rights which vary from state to state.

This warranty contains the entire agreement between Seller and Buyer and supercedes any and all prior agreements, arrangements, or understandings between the parties relating to product warranty.

Due to ongoing product development the actual product or products may vary from the illustrations or photos shown within this manual.

For Manuals, Replacement Parts or Customer Service visit:
www.ezreplacement.com

This product is intended for residential, non-commercial use.

⚠WARNING

This product can expose you to lead, a chemical known to the state of California to cause cancer, birth defects and/or other reproductive harm. For more information go to www.p65warnings.ca.gov/product

MADE IN CHINA

©2021 J & J Global, LLC

Distributed By:
J & J Global, LLC
Dallas, TX 75234