KOHLER. Faucets

Vin™

pull-out kitchen faucet

K-R29679

Features

- Two-function pull-out sprayhead with touch-control allows you to switch between stream and Sweep® spray.
- Sweep® spray is a wide, powerful blade of water that sweeps your dishes and sink clean.
- ProMotion® technology allows the pull-out sprayhead to swivel for more comfortable use.
- MasterClean™ sprayface withstands mineral buildup to wipe clean easily without cleaning products.
- Swing spout provides greater coverage area in sink area for easier food prep and cleanup.
- Single lever handle makes adjusting water temperature easy with one hand.
- KOHLER® ceramic disc valves exceed industry longevity standards, ensuring durable performance for life.
- 1.5 gpm (gallons per minute) maximum flow rate at 60 psi.
- Box includes: Assembled faucet, supply lines, escutcheon plate.

Material

- Premium metal construction.
- Spot Repel™ finish resists fingerprints, smudges and water spots (Matte Black finish only).
- KOHLER finishes featuring ScratchShield™ technology withstand even the toughest daily use (Polished Chrome and Vibrant Stainless finish only).

Installation

- Installs with 1- or 3-hole sink (escutcheon plate included).
- Flexible supply lines and quick-connect fittings make installation easy.
- Longer shank works with countertops up to 2-1/2" thick and is easy to install.

ADA	CSA B651

Codes/Standards

ASME A112.18.1/CSA B125.1
NSF/ANSI 61
NSF/ANSI 372
All applicable US Federal and State material regulations
DOE - Energy Policy Act 1992
California Energy Commission (CEC)
ADA
ICC/ANSI A117.1
CSA B651

KOHLER® Faucet Lifetime Limited Warranty

See website for detailed warranty information.

Available Colors/Finishes

Color tiles intended for reference only.

Color	Code	Description
	CP	Polished Chrome
	VS	Vibrant® Stainless

KOHLER. Faucets

Vin™

pull-out kitchen faucet

K-R29679

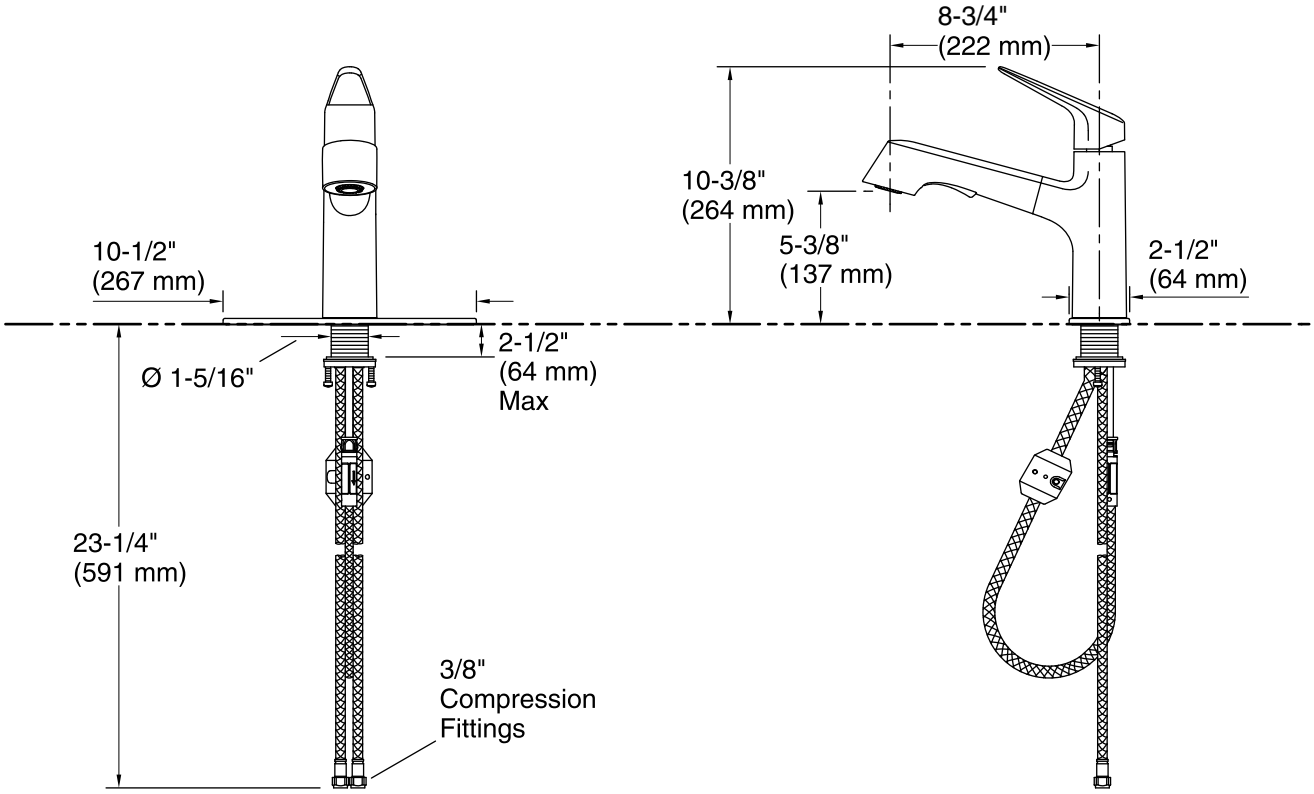

Technical Information

All product dimensions are nominal.

Faucet:

Flow rate:	1.5 gal/min (5.7 l/min)
Pressure:	60 psi (4.1 bar)
Drain included:	No

Spout:

Spout reach:	8-3/4" (222 mm)

Notes

Install this product according to the installation instructions.

ADA, CSA B651 compliant when installed to the specific requirements of these regulations.