winsoon

Barn Door Hardware

Installation Manual

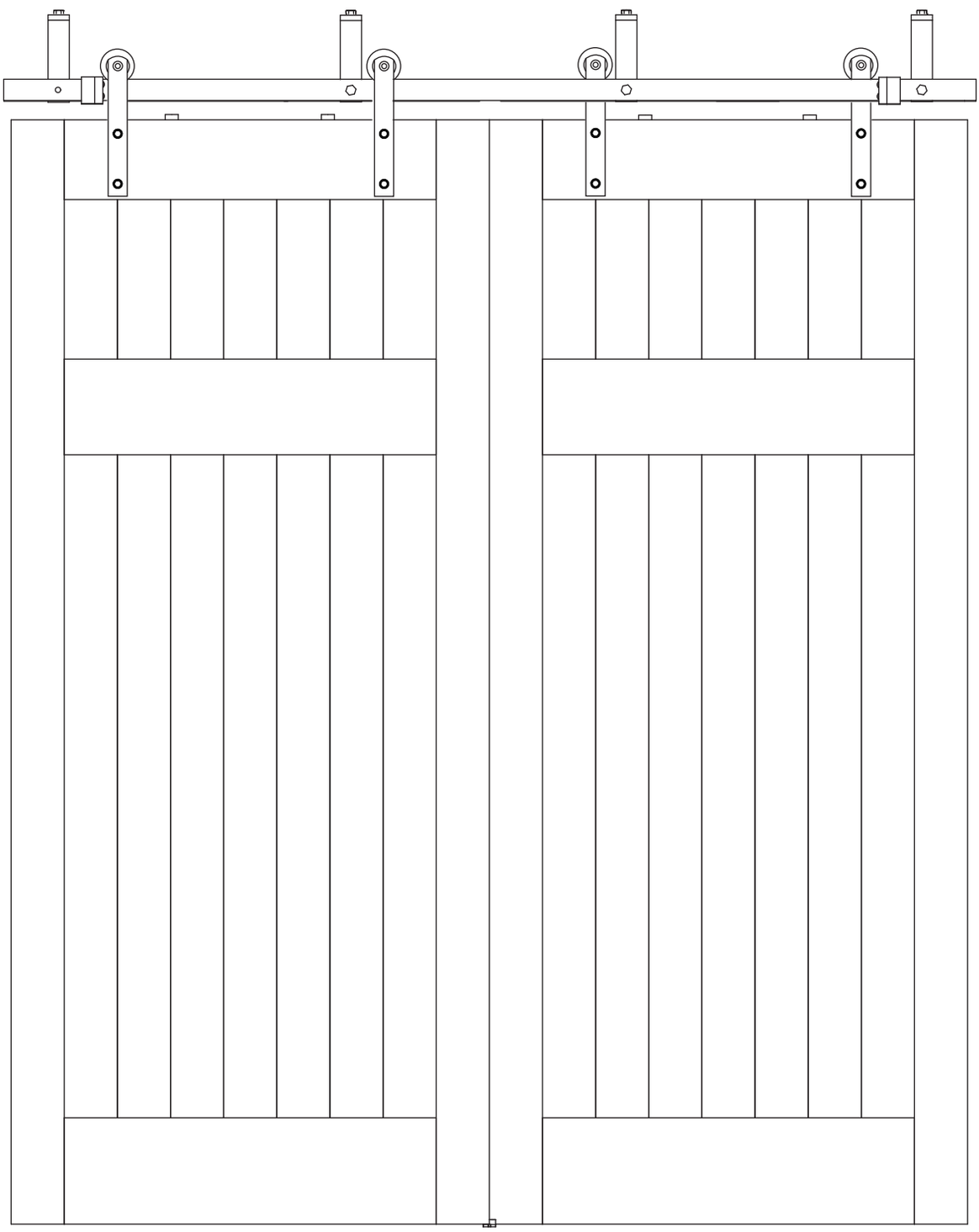

www.winsoonhardware.com

Track Accessories

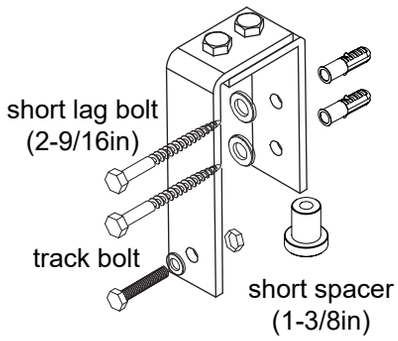

Double Door Hardware Kit Includes										
Part Name	Flat Track	Steel Hanger	Anti-jump Pad	Type A Floor guide	Type B Floor guide	Door Stopper	Lag Bolt	Spacer	Junction Plate	Bypass Bracket Suit
picture										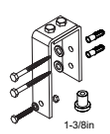
5FT	2	4	4	2	2	4	4	4	0	4

※ Check the Quantities of Flat Track ,Accessories and Steel Hanger.

Note: If you encounter any problem with the package and the following installation, please email us at **productservicecenter@outlook.com** . Please also tell us your "**ORDER ID**," we will solve any issues for you as soon as possible.

● Installation Tools

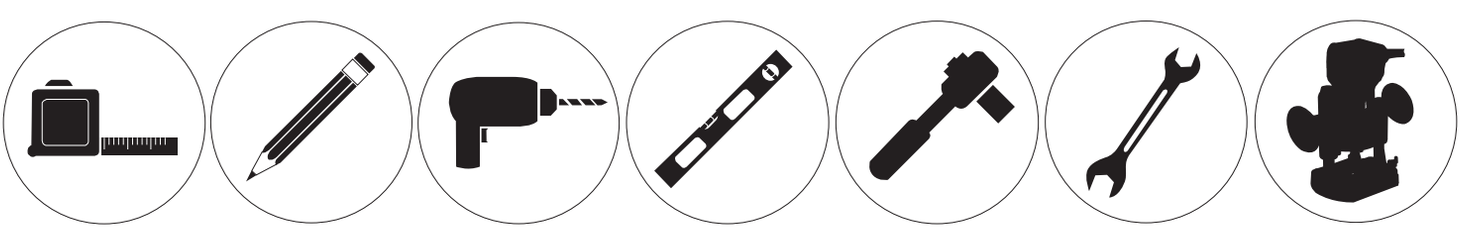

Ruler Pencil drill Level Wrench Ratchet Router

Chart: Track Junction

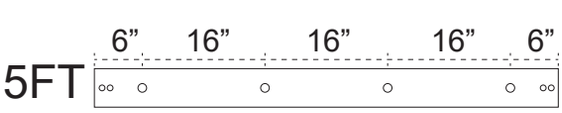

※Hardware Installation

Prepare Your Doors

Step 1: Attach Steel Hangers to Your Doors

Drill 3/8” (10mm) holes at the distances from the top of the doors shown in the above chart. Recommended: The Hangers should be between 2”-4” from the door edge to the center of Hanger.

Attach Hangers with the Hanger Bolts, Washers and Acorn Nuts as shown below.

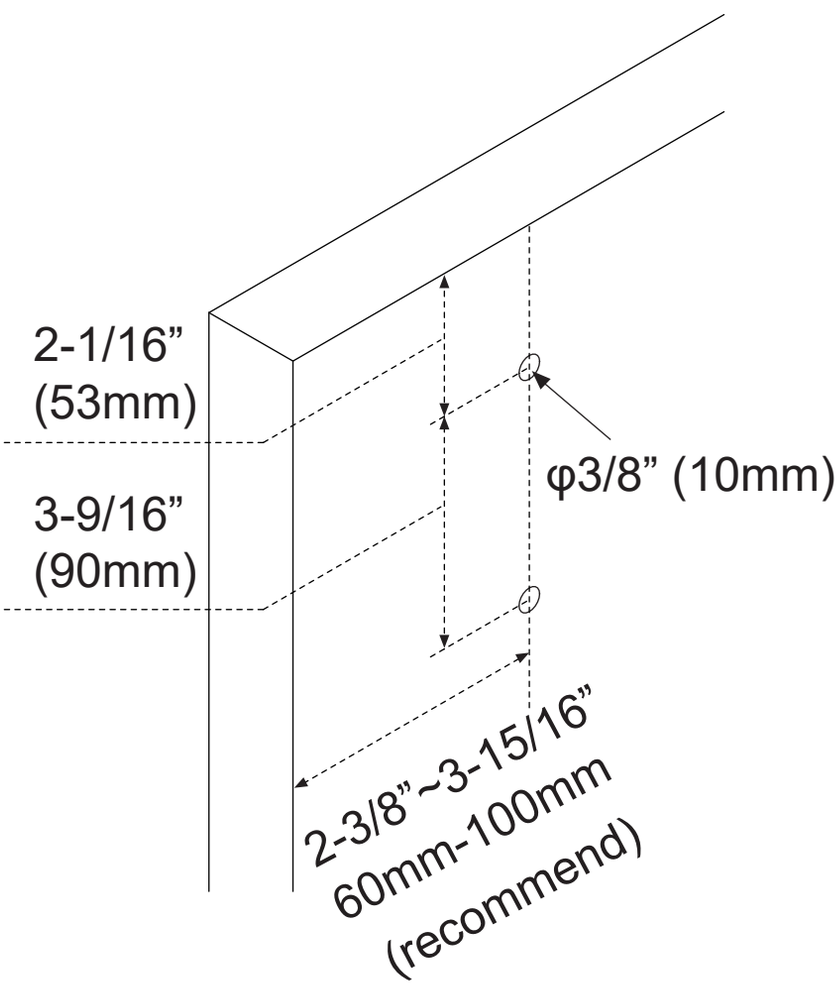

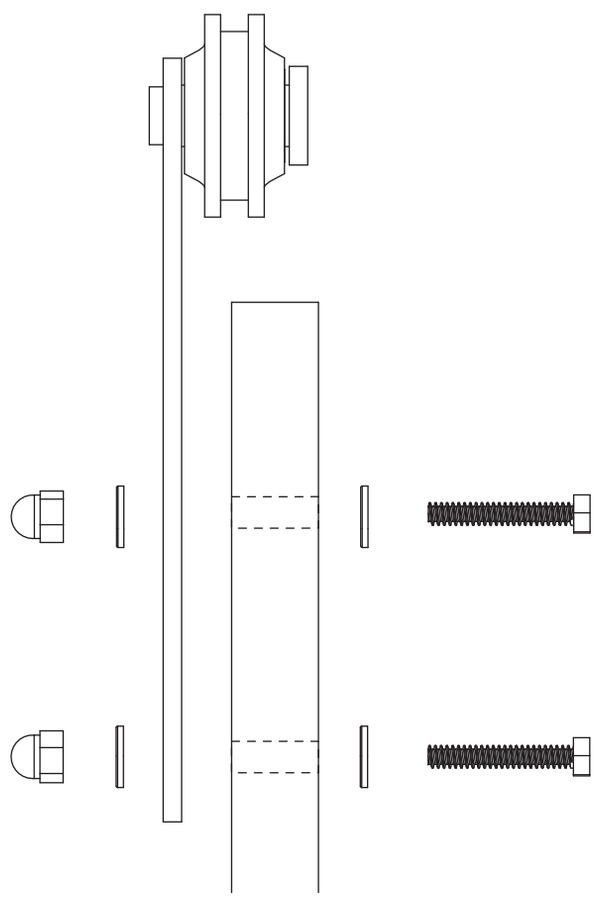

Step 2: Cut Floor Guide Slot At The Bottom Of The Door

①If you use type A floor guide , you will need to Cut a 5/16” (7mm) wide, 3/4” (20mm) deep slot at the bottom of the door.

Recommended: Cut the slot with a router and slot cutter bit.

②If you use type B floor guide , please skip this step.

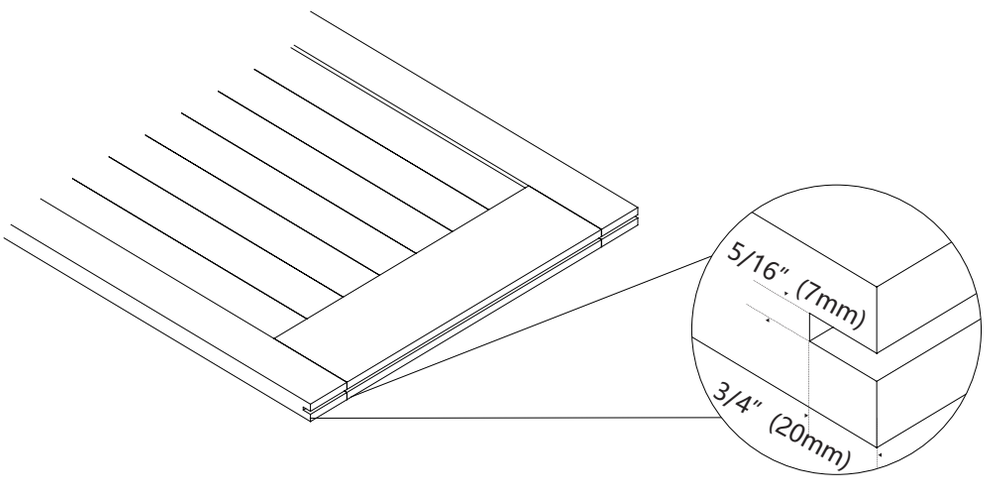

Step 3: Install anti-jump pad

As shown in the illustration, the screw is near the front edge of your door (recommended: drill pilot hole to avoid splitting). Do not over tighten.

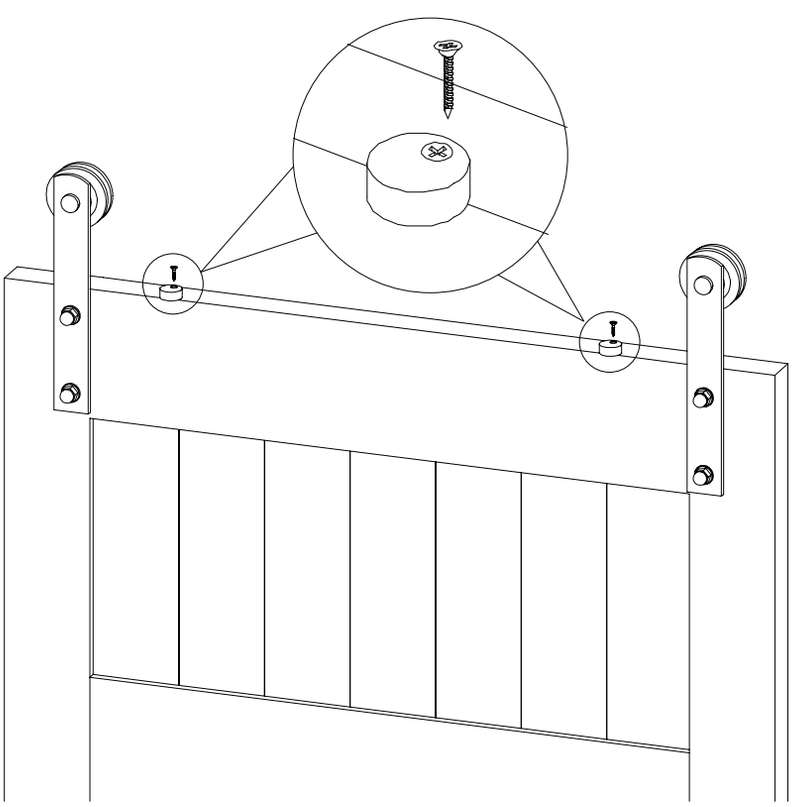

Prepare and Install the Tracks

Step 4: Draw 3 Lines for the Track and Brackets

a.Using a level, draw line ① for the Track, at the door height + 1-11/16” (43mm) above the floor.

b.Pencil lines ② and ③ for the Bracket above line ① as shown in the illustrations below.

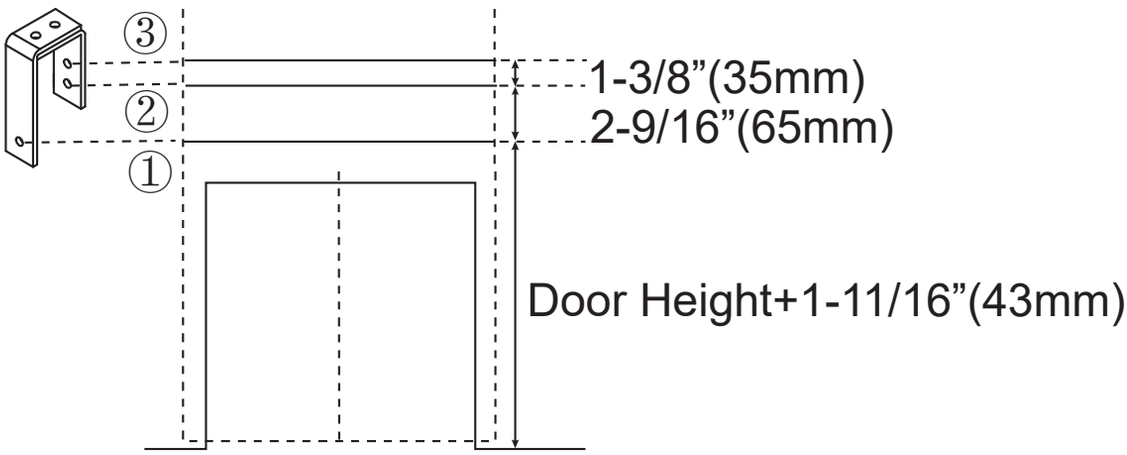

Step 5: Mark and Drill Track Holes

a.Line up a Track on lowest line and mark the location of the holes.

b.Use level to mark the hole locations directly above the original marks on the upper two lines. (Tip: Take care to make the upper two marks parallel to each other so Hangers hang straight.)

c.Concrete wall: Drill holes by using a 3/8” (10mm) concrete drill bit.

d.Wood framed wall: Drill out the holes by using a drill with 1/4” (6mm) drill bit.

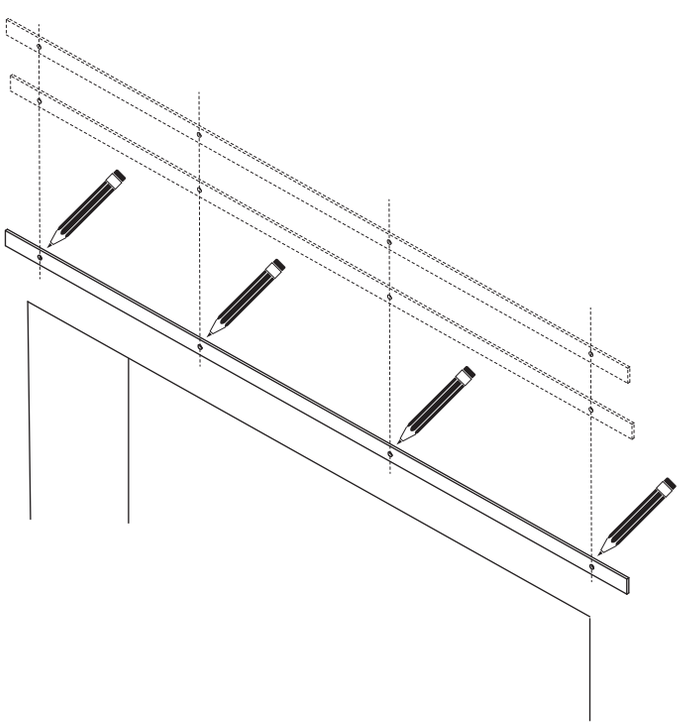

Step 6: Install The Inside Track

Using the Spacers, Long Lag Screws, and Washers (and hollow wall anchor if necessary), attach the Inside Track to the wall as shown in the illustration below.

Tip: Loosely attach one end of the Track with the other end resting on the ground. Then swing track up and attach other end. Finally, fill in the middle holes.

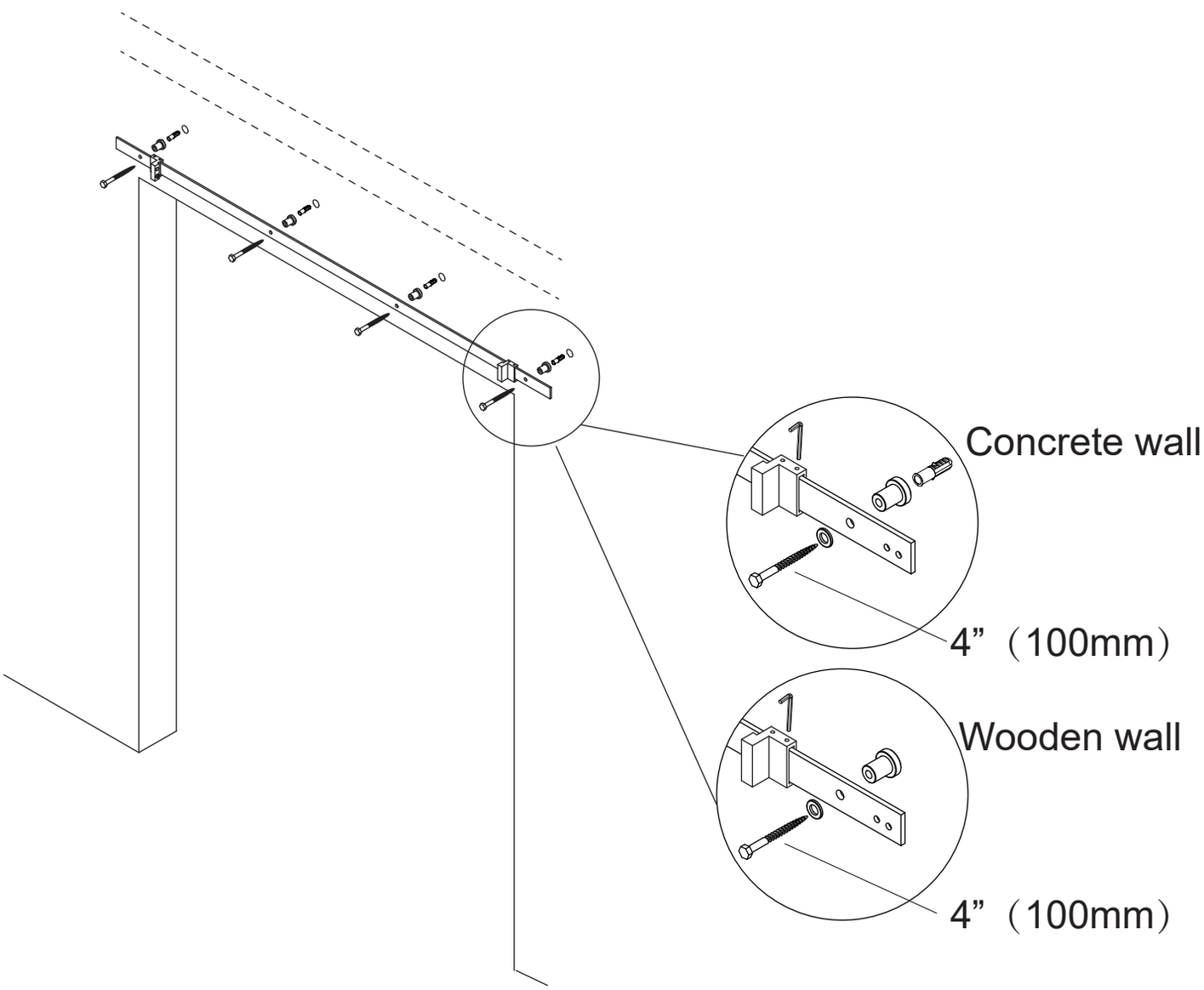

Step 7: Attach Brackets to the Wall

a.Loosely attach each bracket to the wall with Short Lag Screws and washers (and hollow wall anchors if needed).

b.Fully tighten all Lag Screws with your ratchet. Don’t over-tighten screws as you may strip the studs or anchors.

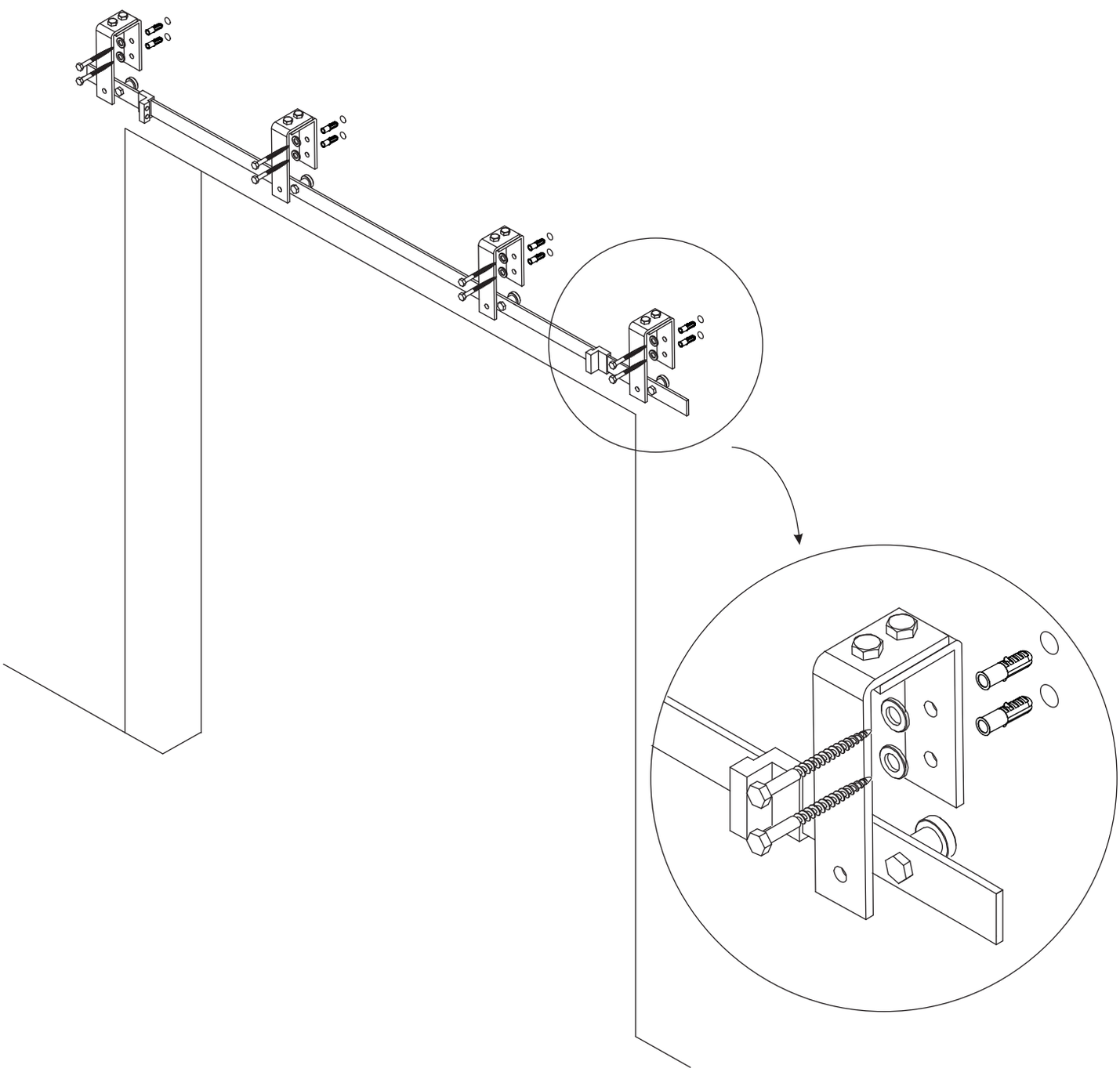

Step 8: Install the Outside Track

Using the short spacers, Track Bolts, Washers and Nuts attach the outside Track to the Bypass Bracket as shown in the illustrations below.

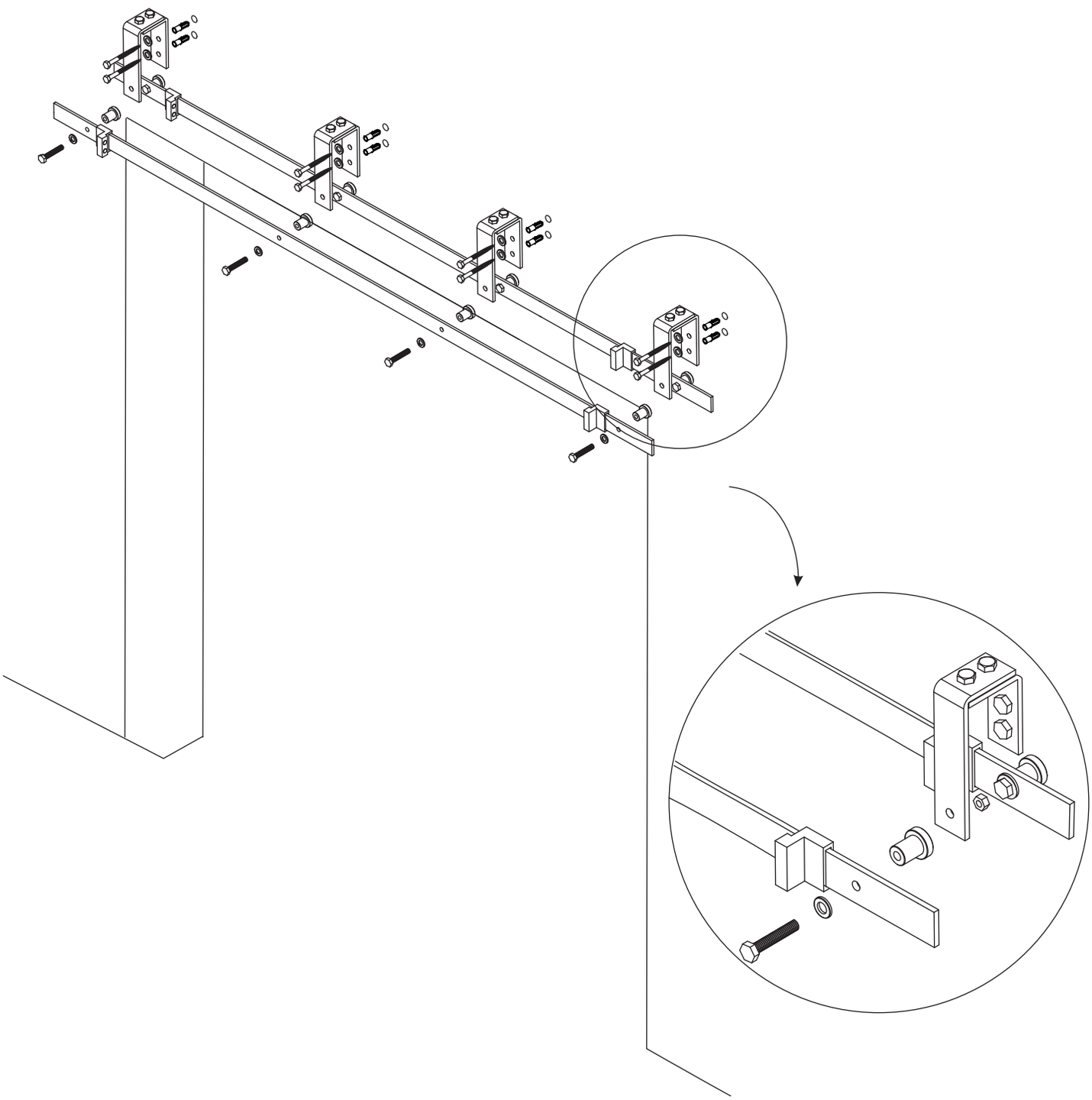

Hanging and Positioning Doors

Step 9: Install Your Doors

a.Hang your Steel Hangers on the Track, and then twist the Anti-Jump Pad toward the wall so that it is under the Track.

b.Position doors in your desired closed position and adjust Door Stoppers to contact the outside edge of the outside Steel Hanger wheel. Repeat with doors in desired open position and the inside Steal Hanger wheel.

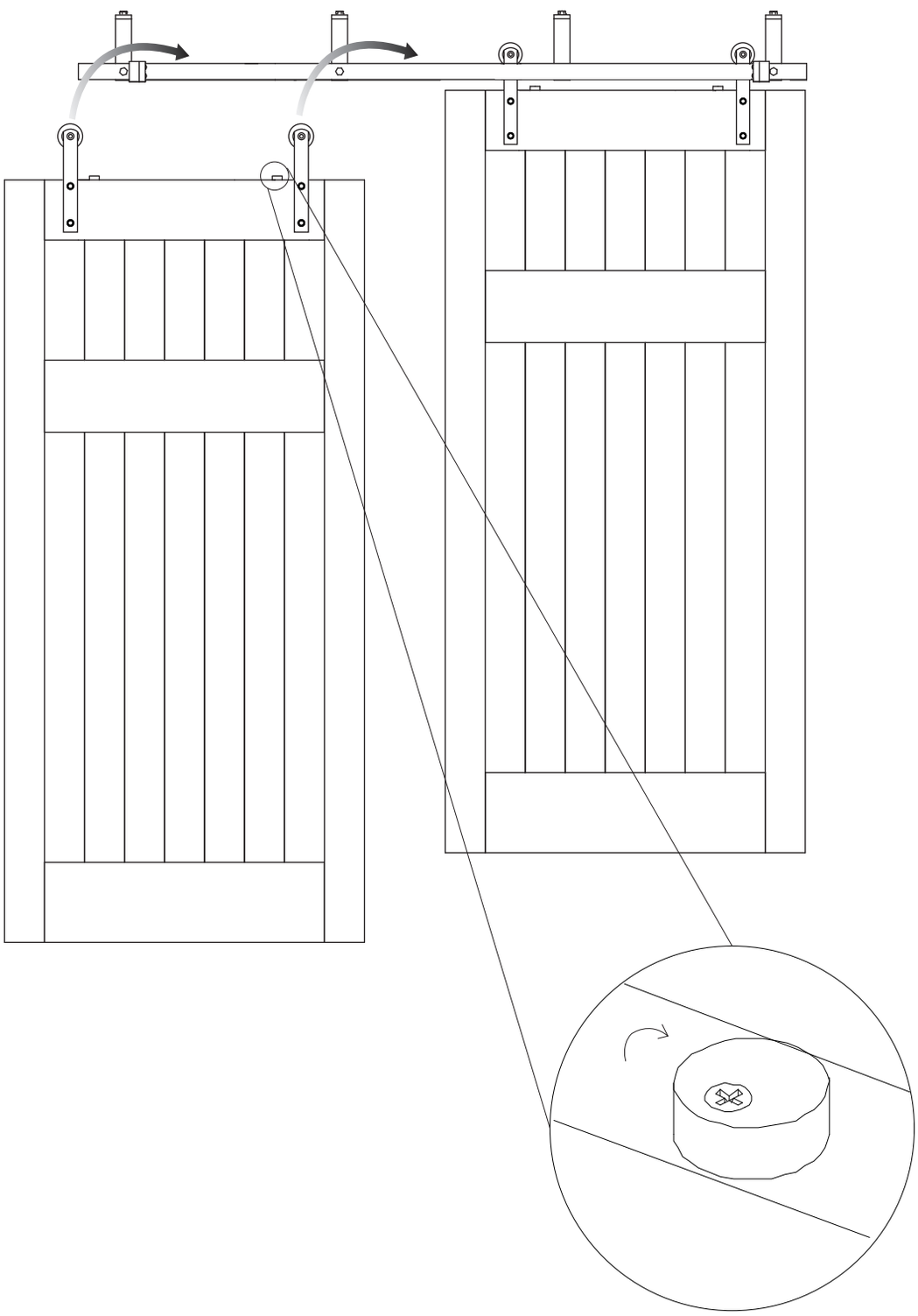

Step 10: Install the Floor Guide

Position the door at your desired open position, put half of the floor guide under the door, mark the location, and then fix guide to the floor.

Type A

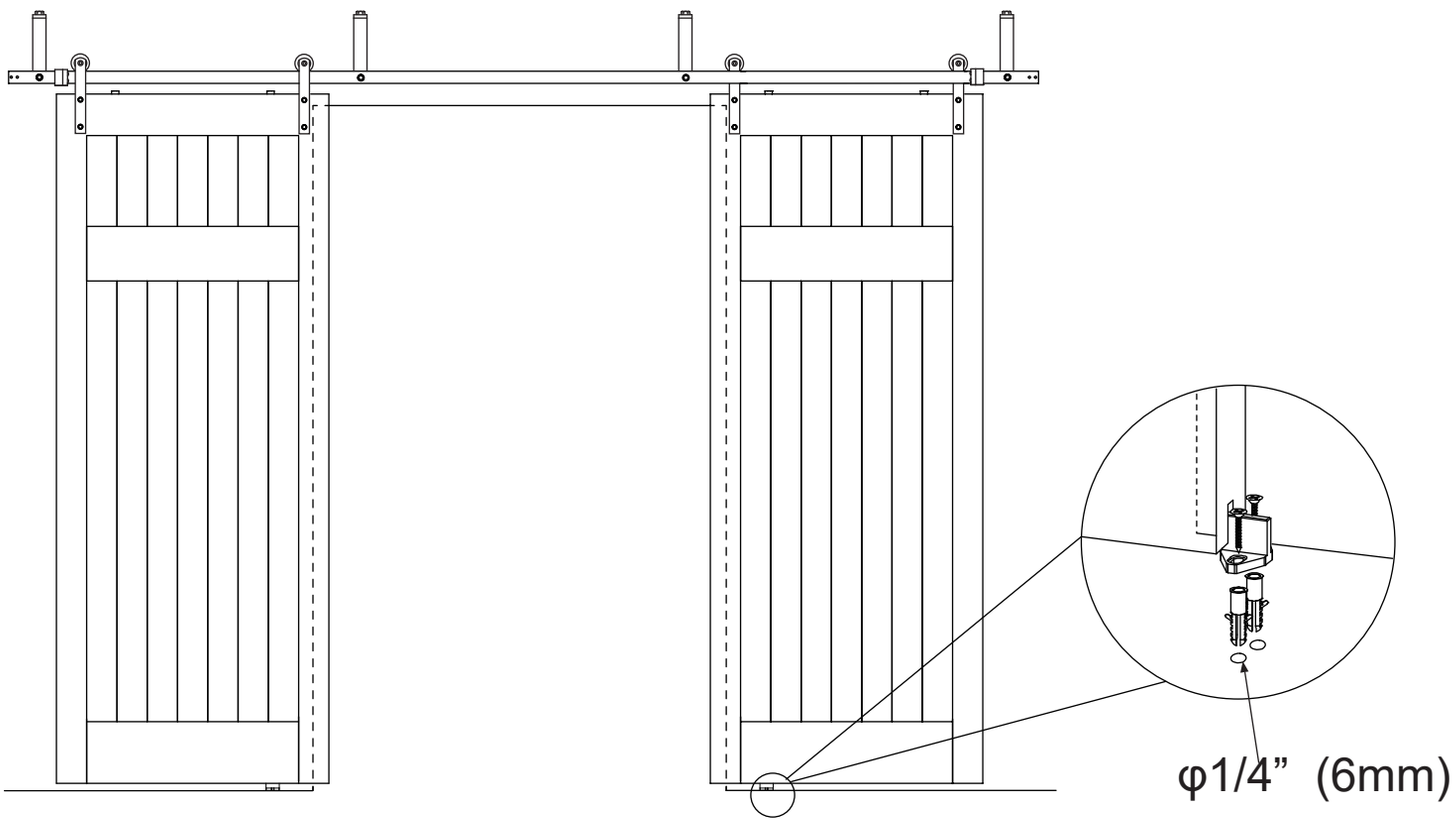

Type B

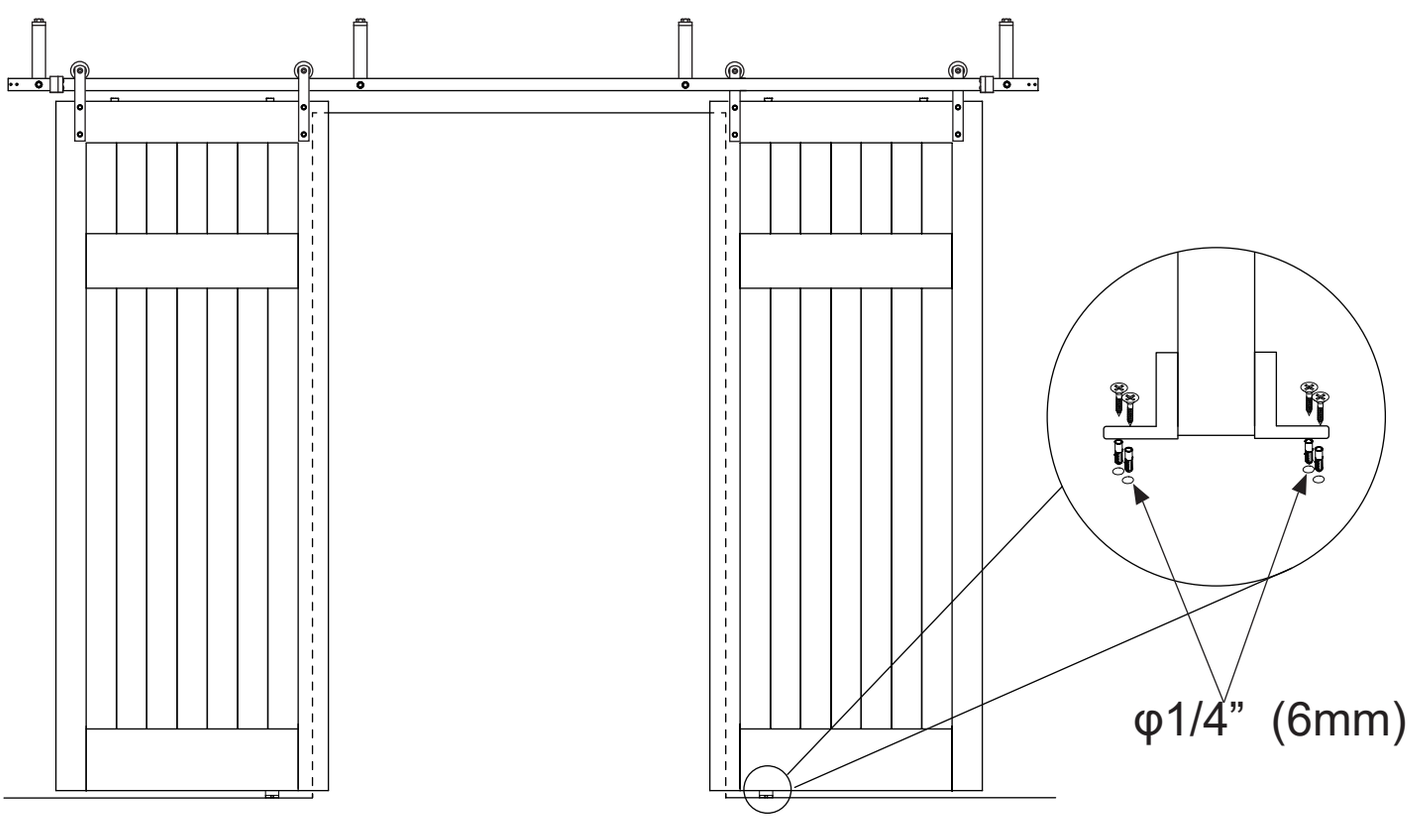

⚠ WARNING

- Failure to wear proper safety gear (i.e.,eye protection) may result in serious injury or death. Always wear proper safety gear before using power tools.

- Improper operation of power tools may result in loss of control, serious injury or death. Always ensure you have complete control of the power tool and the work area is free of hazards before operatiog a power tool.

- Lack of secure clamping of the door may result in unexpected movement of the door,loss of power tool control and serious injury or death. Always securely clamp the door in place before cutting,or drilling, the door.

- Lack of ,or improperly installed Anti-jump Disc may result in the door coming off the track and cause serious injury or death. installation of Anti-jump Disks are required for safe operation of this hardware. installed properly, these discs will keep the door securely attached to the teack.

⚠ CAUTION

- Mishandling of heavy objects (i.e.,doors) may cause a loss of balance and serious injury. Always be sure you have a secure hold on the object and are balanced before moving the object.Always wear safety shoes when lifting heavy objects.

- Getting body parts (i.e., hair,fingers) caught in moving parts may cause pinching and serious injury.Do not put fingers in parts that may move and always remove or contain anything on your body that may become entangled with a moving part.

- Closing sliding doors with your hand on the end of the door may result in your hand, or fingers, getting caught between the door and other solid objects (i.e., another door, molding) causing serious injury. Always use the door handle to close doors.

Usage Statement:

Use of excessive force when opening, and closing,the door(s) may result in damage to the hardware. Always hold the handle and gently open and close the door(s).

Warranty Statement:

5 year straight unconditional warranty service enables every single hardware's durability coverage during its life time.