55” ANTONIO CAST IRON ROLL TOP TUB

Cat. No.
CTRH54

BARCLAY

L: 54”
W: 30-⅛”
H: 24” (from floor to top of tub)
19-¼” (from bottom of tub to top of tub)

The following is recommended for CTRH54 tubs with faucet holes:
- Tub wall-mounted faucets or hand-held showers: part# **4022, 4025, 4035**
- Tub wall-mounted faucets for use with risers: part# **4001, 4013, 4023, 4030, 4031**
- Double offset bath supplies: part **#5576**
- Leg tub drain: part **#5599**
- Complete shower unit: part# **4124, 4143**

Gallon Capacity:	36
Shipping Weight:	475 lbs.
Empty Weight:	247 lbs.
Filled Weight:	547 lbs.

Features:

- ►Inside finish is white enamel
- ►Tub exterior is white (epoxy)
- ►3-⅜” centers in tub wall
- ►Continous rolled rim
- ►Pre-drilled overflow hole
- ►Cast Iron ball and claw feet
- ►Non-skid strips
- ►Feet are attached and leveled before shipment
- ►Tub is thoroughly inspected before shipment

Foot Finishes:
UF Unfinished
BL Painted Black
BQ Painted Bisque
PB Polished Brass

CP Polished Chrome
WH Painted White
PN Polished Nickel
SN Brushed Nickel
ORB Oil Rubbed Bronze

Custom Colors Available (inside of tub is always white enamel):
Painted bathtubs are considered “special order” and are not returnable
$160 Bisque or Black $250 Designer Color

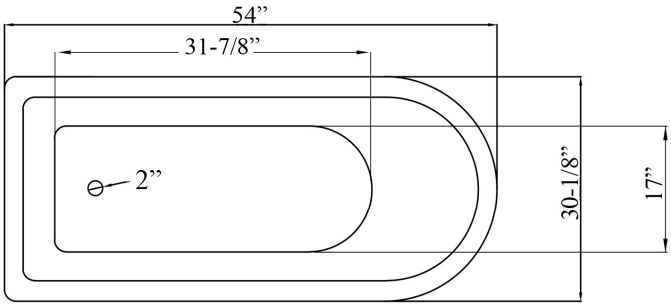

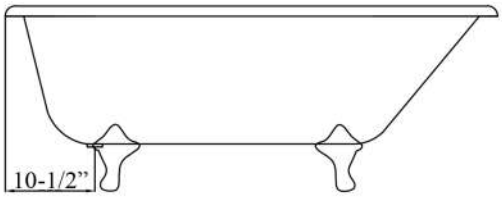

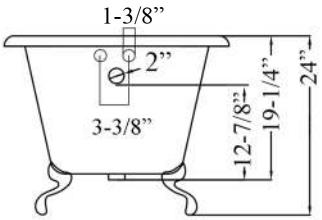

TUB FILLER WITH DIVERTER AND SHOWER RING

Cat. No.
4124

BARCLAY

Shower Rod:	48” W x 24” D
Riser Height:	62”
Wall Support:	10” adjustable
Ceiling Support:	30” adjustable

Features:

- ►¾” Brass tubing
- ►Code gooseneck spout
- ►3-⅜” Centers on tub wall
- ►1/4 Turn ceramic disc cartridges
- ►Flow rate is 3.68 GPM
- ►¾” Nipples
- ►Porcelain lever handles
- ►Includes riser and rectangular shower Rod
- ►Includes ceiling and wall support assemblies
- ►Supports adjustable by cutting
- ►Does Not include showerhead
- ►Cast Iron tub use ONLY
- ►For Acrylic Tub Use Buy Part# **4122**

Finishes:

CP Polished Chrome

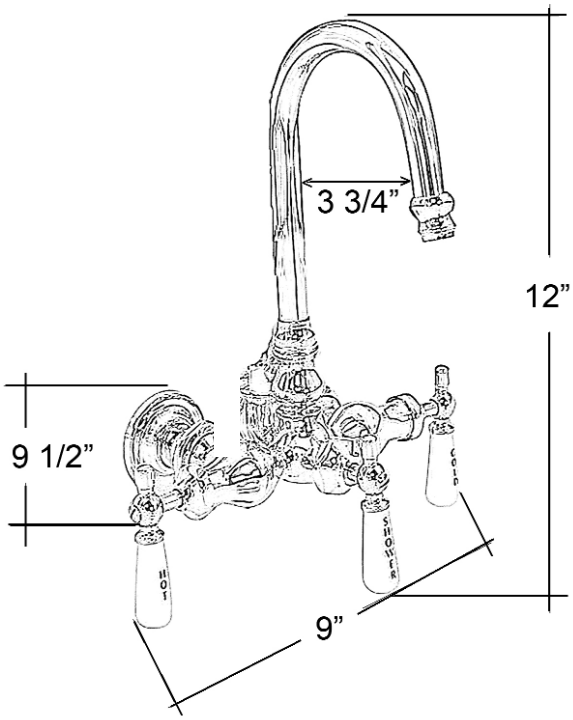

Dimensions are nominal and may vary. Dimensions and specifications subject to change without notice.

DOUBLE OFFSET BATH SUPPLIES

Cat.No.
5576

BARCLAY

H: 24”

OD: ½”

Features:

- ►For use with faucets mounted to the tub wall
- ►No Stops
- ►½” Compression inlet
- ►¾” Compression outlet
- ►0.500” Outer diameter
- ►0.440” Inner diameter
- ►0.030” Thickness of the wall
- ►IAPMO approved
- ►Availble in 5 finishes

Compliance Certification
Meets or exceeds the following specifications: ASME-A112 (and 19.6M) for Vitreous china fixtures. ASME 112.19.9M for fire clay fixtures.

Finishes:

CP	Polished Chrome	**PN**	Polished Nickel
PB	Polished Brass	**BN**	Brushed Nickel
ORB	Oil Rubbed Bronze		

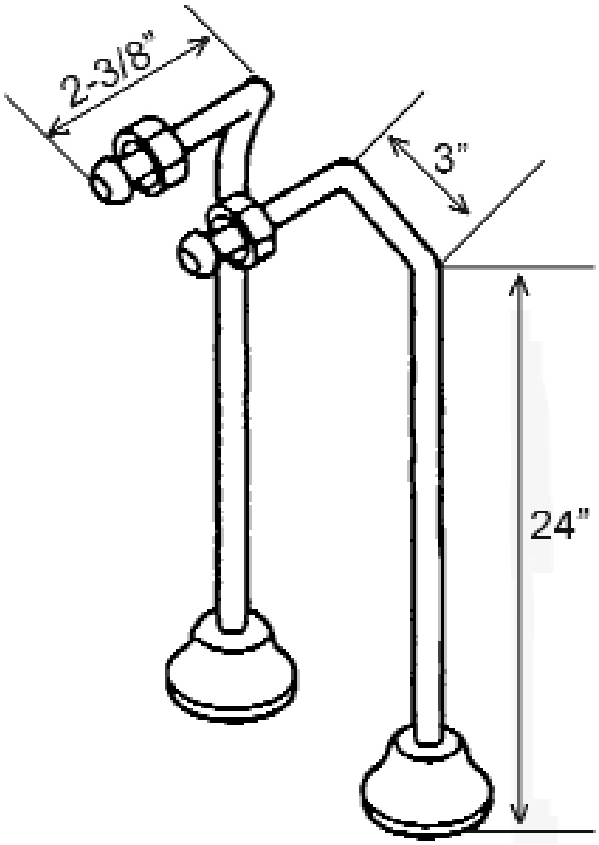

Use on concrete floors requires special installation. We recommend using a plumbing proffessional.

Dimensions and specifications subject to change without notice.

LEG TUB DRAIN

Cat. No.
5599

BARCLAY

Escutcheon Height: 1-¼”

Features:

- ►Twist-and-lift stopper
- ►Includes deep escutcheon
- ►Height adjustable 15”-18”
- ►Depth adjustable 12”-14”
- ►Includes deep escutcheon
- ►IAPMO approved
- ►Available in 5 Finishes

Finishes:

CP	Polished Chrome
BP	Polished Brass
SN	Brushed Nickel
PN	Polished Nickel
ORB	Oil Rubbed Bronze

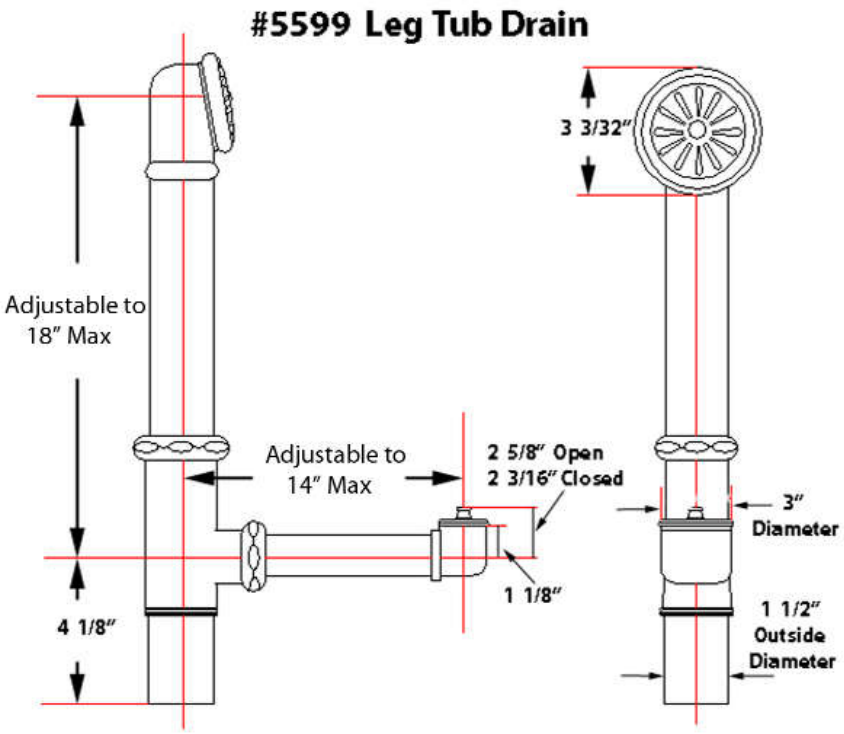

Dimensions and specifications subject to change without notice.