HEAT STORM

User manual

Model: HS-1500-TRIB

1500 W | Indoor-outdoor



V1

Table of contents:

Important instructions 3
Included parts 6
Installation instructions 7
Operations & controls 12
Maintenance 12
Storage 13
Return policy 14
1-year limited warranty 14

Thank you and congratulations on your Heat Storm Heater! **Please read and keep all safety and use instructions.** Should you have any questions or concerns, please don't hesitate to reach out to us at 435-752-6611 or cs@heatstorm.com.

Important instructions

Please read and understand this entire manual before attempting to assemble, operate, or install the product. Use this heater only as described in the manual. Do not operate the heater unless it is attached to the wall, tripod, or ceiling mount. If the directions are not followed, an electric shock or fire may result causing property damage, personal injury or death.

SAFETY GUIDELINES & FEATURES

- Adhere to basic precautions to minimize the risk of fire, electric shock, and injury when using electrical appliances.
- The heater becomes hot during operation; avoid direct contact with hot surfaces to prevent burns.
- Exercise extreme caution in the presence of children, invalids, or when the appliance is unattended. Children should not play with the appliance.
- Individuals with reduced capabilities should not operate the appliance without supervision or proper instruction.
- Unplug the heater when not in use. To disconnect from the power supply, grip by the plug to poll from the power socket. Never pull by the cable.
- **Overheat protection:** If the product malfunctions or is covered, and the temperature probe detects a temperature above 90°C, the protection program will activate. The heating element will turn off, and the power indicator light will flash and remain on. Additionally, the heater will buzz with intermittent chirps.
  Note: To deactivate the overheating protection, you must unplug or turn off the power and then turn it back on.
- **24-hour automatic shutdown:** If the product is in working mode for more than 24 hours, it will automatically shut down. The countdown will start from the last action, after which it will enter standby mode.
- **Tip-over protection:** If the heater is tilted more than 45 degrees, the heating element will turn off, and the product will enter standby mode."
- Do not operate unless the extending guard (Protection grid, see item 3 in part list) is in place. Do not use if the extending guard has been deformed.

WARNING

- For any maintenance other than light cleaning, please contact an authorized service representative.
- Never plug the appliance into the socket with wet hands.
- High temperature, risk of fire, keep electrical cords, drapery, furnishings, and other combustibles at least 3 feet (0.9 m) from the front of the heater and away from the side and rear. To reduce the risk of fire, do not store or use gasoline or other flammable vapors and liquids in the vicinity of the heater.
- Heat Storm Infrared Heaters are considered to be an appliance. Each heater and appliance should be on its own circuit.
- DO NOT operate if the following occurs:
  - » Heater has a damaged cord or plug.
  - » After the heater malfunctions.
  - » Heater has been dropped or damaged in any manner.

  Turn off the heater, disconnect the cord, and have heater inspected/serviced by an electrician before reusing or discard the heater.

CAUTION

- To prevent electric shock, match the wide blade of the plug to the wide slot and fully insert.
- To disconnect, turn controls off, wait for the fan to stop, and then remove the plug.
- Do not insert foreign objects into ventilation or exhaust openings to prevent electric shock, fire, or heater damage.
- Do not block air intakes or exhaust. Do not place heater on soft surfaces or near a bed, where openings may become blocked or blankets can be ignited.
- Under no circumstances should this heater be modified. Modifications will void the warranty. Parts removed for servicing must be replaced prior to operation.
- Do not move the heater while it is operating. Turn off the heater, wait for the heater to cool, and then relocate.
- Plug the heater directly into a wall outlet; do not use extension cords, surge protectors, or relocatable power taps. This heater is designed for standard 120-volt outlets and should only be connected to a proper 2-prong polarized outlet.
- Ensure the cord is not under carpeting, covered with rugs, runners, or similar coverings. Avoid routing it under furniture or appliances and position it away from high-traffic areas to prevent tripping hazards.

- If the supply cord is damaged, it must be replaced by the manufacture, its service agent, or similarly qualified persons in order to avoid a hazard.
- Do not use in the following areas: outdoors, closets, or locations with gasoline, paint, or flammable liquids.
- Do not use gasoline or any other flammable vapors or liquids, including aerosol cans, near this heater while it's in operation. This includes but is not limited to hydrogen, acetylene, ammonia, methane, ethylene, carbon monoxide, or any other gases lighter than air.
- This heater is fitted with safety guards. These are intended to stop large objects from hitting the emitters. On no account should the heater be operated with the guard removed.

REMOTE CONTROL BATTERY REPLACEMENT

WARNING: This product contains a lithium button/coin cell battery. If a new or used lithium button/coin cell battery is swallowed or enters the body, it can cause severe internal burns and can lead to death in a s little as 2 hours. Always completely secure the batter compartment. If the battery compartment does not close securely, stop using the product, remove the batteries, and keep it away from children. If you think batteries might have been swallowed or placed inside any part of the body seek immediate medical attention.

WARNING: Improper use may cause battery leakage, rupture, or fire, resulting in injury or damage. Always follow safety guidelines and proper disposal methods. Keep batteries away from children.

- Only use CR2025 batteries.
- Ensure the battery is installed correctly, observing the correct polarity (+ and -).
- Do not attempt to recharge non-rechargeable batteries.
- Avoid mixing different battery types, such as alkaline, carbon-zinc, lithium, or rechargeable (e.g., Nickel-Cadmium).
- Keep batteries out of reach of children and do not ingest. Batteries are small parts and pose a choking hazard.
- Remove batteries from the device if it will not be used for an extended period, or if they are depleted.
- Clean battery contacts before installing new batteries.
- Dispose of used batteries promptly and responsibly, following local regulations and recycling guidelines, which can be found online or in your local phone directory.
- Do not dispose of batteries in fire, as they may explode or leak.

Included parts

Missing parts?
Email us at cs@heatstorm.com

HEATER



TRIPOD MOUNT

1. Quick-release bracket (x1)
2. Protection grid
3. M4x12 screw (x5)
4. M6x45 screw (x1)
5. M6 nut (X1)
6. M4x20 screw (x2)
7. Remote control
8. Cable tie (x2)
9. ST3.5x10 self tapping (x1)

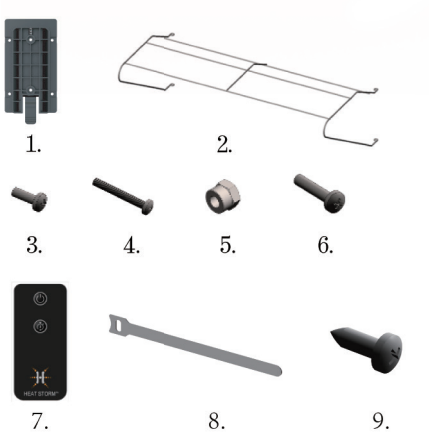

CEILING MOUNT

1. M4x20 screw(x2)
2. ST4.0x35 self tapping (x3)
3. Ribbed plastic anchor (x3)
4. M6x50 hex-head screw (x2)
5. M6 nut (x2)
6. Quick-release bracket (x1)
7. Cable clip-shared by wall mount
8. ST3.5x10 self tapping (x1)

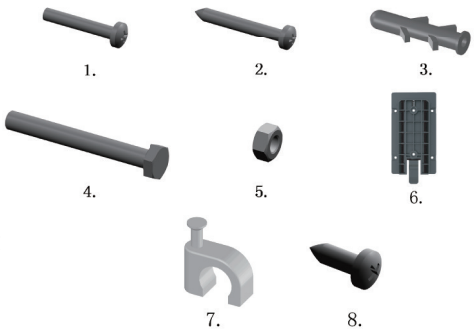

WALL MOUNT

1. Quick-release bracket (x1)
2. ST4.0x35 self tapping (x4)
3. Ribbed plastic anchor (x4)
4. Cable clip-shared by ceiling mount
5. ST3.5x10 self tapping (X1)

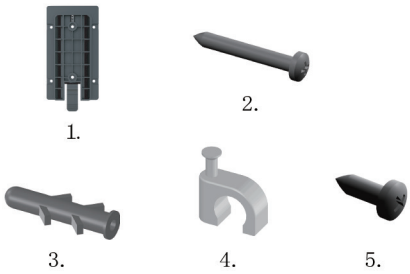

Installation instructions

- Ensure that the heater is properly installed before use.
- The heater should always be installed horizontally and should only use the mounting brackets provided.

HEATER LOCATION (wall & ceiling mount)

When choosing a location for your new heater, ensure that the general instructions are followed.

- Your heater must be installed on a provided mount or tripod.
- The heater should not face the ceiling or flammable substances.
- Ensure that there is no possibility of flammable material coming into contact with the heater or lying near the heater.
- This heater is weather resistant and can be used indoors or outdoors. If using outdoors, use a waterproof outlet.

Cold climate installation note

Placing the unit under a window or on a poorly insulated wall may result in the heater reading a colder ambient temperature than the actual room temperature.

DO NOT USE in the following areas:

- Locations with gasoline, paint, or flammable liquids
- Wet or moist locations
- Closets
- Do not use directly near a bathtub, a shower, a swimming pool

POWER CONNECTION GUIDELINES

Heat Storm Heaters are classified as appliances. Each heater and appliance should have its own dedicated circuit.

This heater is designed for standard 120-volt, 20-amp outlets and should only be connected to a properly grounded outlet. Plug the heater directly into a wall outlet with the cord fully unwound; do not use extension cords, surge protectors, or relocatable power taps. Do not use this heater with a timer device that automatically turns it on while unattended (e.g., Alexa or Google programmed plug).

Ensure the cord is not concealed under carpeting, rugs, runners, or similar coverings. Avoid routing it under furniture or appliances and position it away from high-traffic areas to prevent tripping hazards.

Regularly inspect your heater cord and plug connections. A loose-fitting outlet can cause the plug to overheat or start a fire. Ensure the plug fits tightly in the outlet. Check frequently during use to ensure the plug and outlet are not hot. If they are, discontinue using the heater and have the outlet replaced by a qualified electrician.
Note: Heaters draw more current than small appliances, and overheating of the outlet may occur even if it has not happened with other appliances.

GROUNDING INSTRUCTIONS

This heater operates on 120 volts. The cord features a plug, shown at A in Figure 68.1. An adapter (shown in C) is available for connecting three-blade grounding-type plugs to two-slot receptacles. If using the adapter, ensure the green grounding lug extending from it is connected to a permanent ground, such as a properly grounded outlet box. Do not use the adapter if a three-slot grounded receptacle is available.

Figure 68.1
Grounding methods

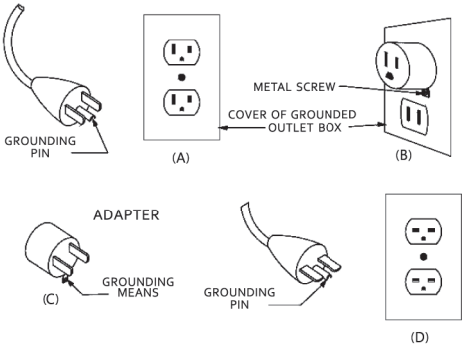

CAUTION

High temperature, risk of fire, keep electrical cords, drapery, furnishings, and other combustibles at least 3 feet (0.9 m) from the front of the heater and away from the side and rear. To reduce the risk of fire, do not store or use gasoline or other flammable vapors and liquids in the vicinity of the heater.

TOOLS NEEDED FOR INSTALLATION

- 3/16” drill bit
- Philips screwdriver

TRIPOD

Step 1: Fasten the mount plate to the tripod.

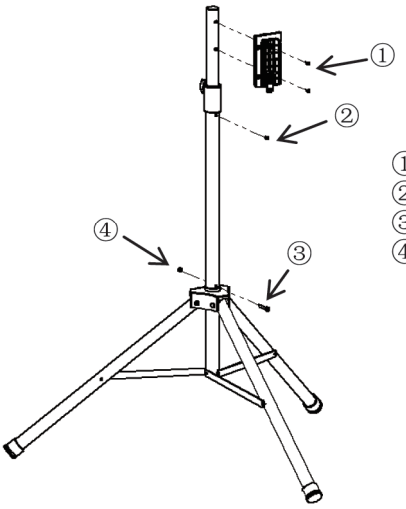

① 2 PCS SCREW M4X20
② 1 PC SCREW M4X12
③ 1 PC SCREW M6X45
④ 1 PC NUTS M6

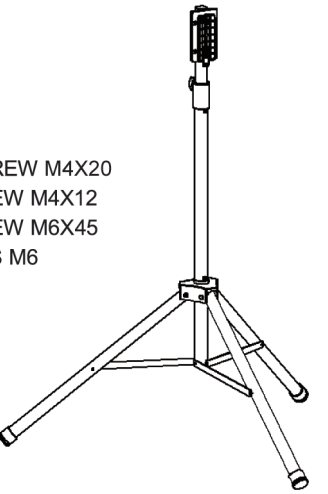

Step 2: Mount the heater to the tripod.

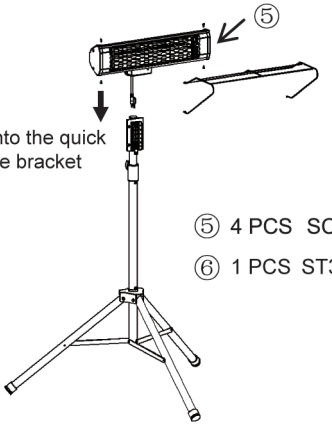

⑤ 4 PCS SCREW M4X12
⑥ 1 PCS ST3.5X10 SELF TAPPING



Step 3: Fix the power cord around the tripod with the provided cable tie.



WALL AND CEILING MOUNT

ONLY USE SUPPLIED BRACKETS.

- Ensure the power cable can reach an power outlet. Do not twist or bend the power cable.
- Do not install closer than 19.7 inches (500 mm) to a vertical, horizontal (etc) surface.

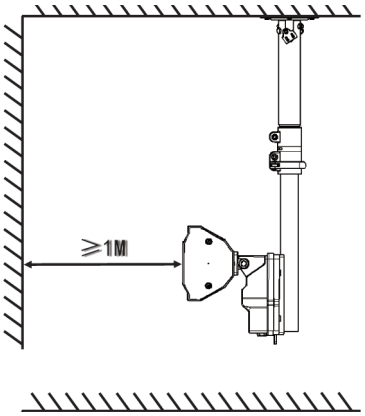

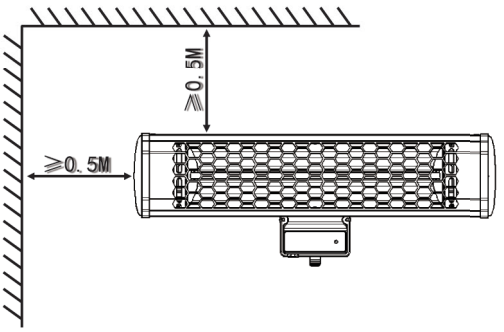

- Prevent the power cable from touching the heater or entering the heated area. Secure the cord to the wall or ceiling when using the mounts to avoid fire or damage.

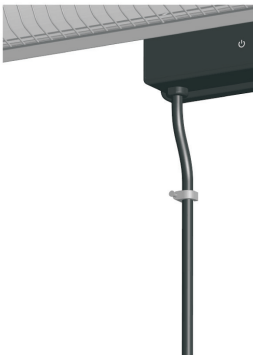



Ceiling Bracket Assembly Instruction

①

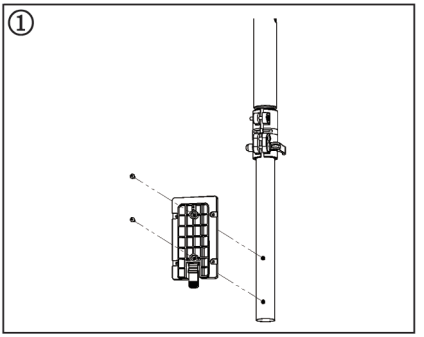

2PCS M4*20 Screw

②

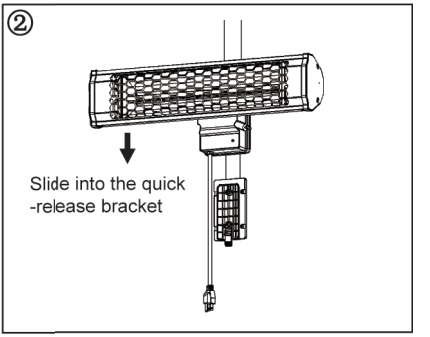

③

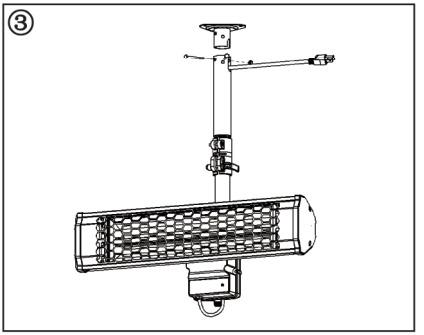

2PCS Hex-head M6*50 Screw
2PCS M6 NUT

④

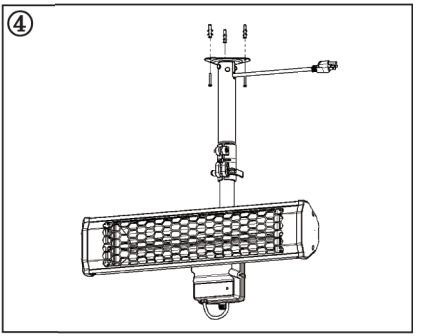

3PCS Self Tapping ST4.0*35
3PCS Ribbed Plastic Anchor *

⑤

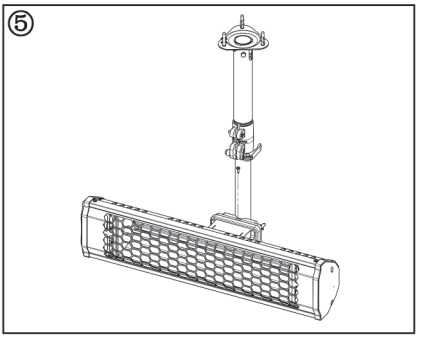

1PC ST3.5x10 Self Tapping

⑥

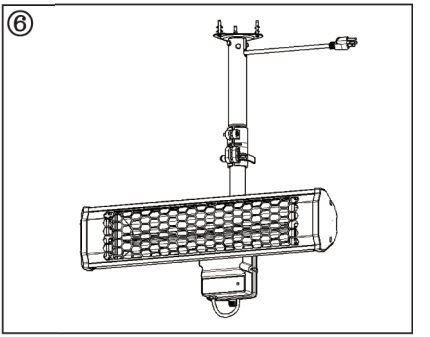

*Use ribbed plastic anchors for mounting into drywall ceilings only. If mounting into wood studs, plastic anchors are not necessary.

Wall mount:

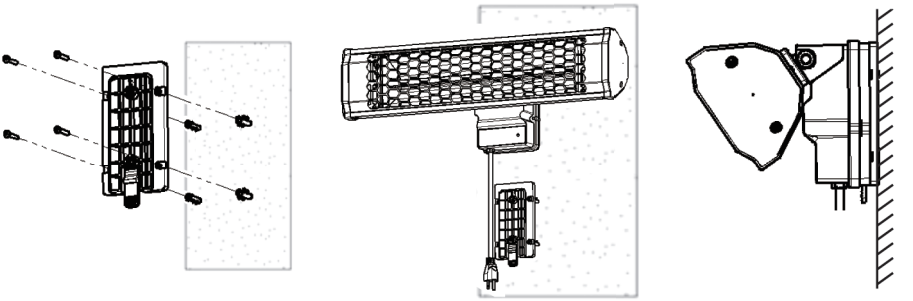

1.ST4.0 X35 Self Tapping (x4)

2.Ribbed Plastic Anchor (x4)

Do not install less than 1.8m from the floor.
For Canada:
Do not install less than 2.4m from the floor.

Operations & controls

Power ON/OFF
Press the power icon on either the remote or the heater to alternate between on and off.

Timer
Turn the heater on and then tap on the timer button on the remote to enable edit mode. The display will flash. Continue pressing the timer button to change the "off" time. The timer will display in hour increments from 1 to 9 hours. Wait 5 seconds for the timer setting to activate. Press the on/off to cancel the delay off timer.

Maintenance

This heater contains no moving parts and needs very little maintenance. When the heater builds up heavy dirt, use a soft cloth to wipe it off.

All other servicing should be performed by qualified service personnel.

HEATER MALFUNCTION OR DAMAGE

DO NOT operate if the following occurs:

- Heater has a damaged cord or plug.
- After the heater malfunctions.
- Heater has been dropped or damaged in any manner.

Turn off the heater, disconnect the cord or turn off the circuit at the breaker, and have heater inspected by an electrician or authorized service facility before reusing.

Damaged cord or plug

If the supply cord is damaged, it must be replaced by the manufacture, its service agent, or similarly qualified persons in order to avoid a hazard.



WARNING

Before cleaning, unplug from the power supply and wait until the heater cools down.

Storage

You may store your heater indoors, where it is inaccessible to children. Alternatively, disassemble the heater and store it in its original packaging box.

Tripod disassembly instructions:

1. Unplug from the outlet and allow it to cool down.
2. Carefully disassemble the extending guard and tripod legs by removing the screws as shown in the installation figures.
3. Carefully fold the power supply cord and secure it with a cable tie.
4. Place the heater and all assemblies, including screws and nuts, in the packaging box, and then store it in a dry location, away from direct sunlight and out of reach of children.
5. When you next use it, assemble it according to the installation instructions before use.

Returns & exchanges

30 DAY RETURN POLICY

Heaters purchased directly from EnergyWise Solutions can receive a refund of the total sales amount if the following conditions are met within 30 days:

1. Product is in new condition.
2. Product is packed in the original manufacturers box and packing material.
3. Original manuals and accessories are included in package.

EXCHANGES & WARRANTY

After 30 days from the purchase date, the buyer is responsible for all freight/shipping charges associated with exchanges, refunds, or warranty claims for the purchased product.

1-year limited warranty

The manufacturer warrants this product and included accessories against defects in materials and workmanship under normal use for a period of ONE (1) YEAR from the date of retail purchase by the original end-user purchaser.

EXCLUSIONS AND LIMITATIONS

1. Install and operate the electric heater strictly in accordance with the provided instructions at all times. Unauthorized repairs, alterations, willful abuse, accidents, or misuse of the product will void this warranty.
2. This warranty is exclusive to the original owner, valid only if the purchase was made through an authorized supplier of the product, and is non-transferable.
3. The warranty is limited to repairing or replacing defective parts in material or workmanship. This applies only if the said part(s) have been exposed to normal conditions of use and service, confirmed by the manufacturer's inspection.
4. The manufacturer may, at its discretion, fulfill warranty obligations by refunding the wholesale price of the defective part(s).
5. Costs related to installation, labor, construction, transportation, or any other associated expenses arising

from defective part(s), repair, replacement, or otherwise, are not covered by this warranty. The manufacturer disclaims responsibility for such costs.

6. The owner/user assumes all risks, including any direct, indirect, or consequential loss or damage resulting from product use, except as mandated by law.
7. All other warranties, whether expressed or implied, pertaining to the product, its components, accessories, or any manufacturer obligations/liabilities, are expressly excluded. The manufacturer neither assumes nor authorizes any third party to assume additional liabilities related to the product sale.
8. The manufacturer neither assumes nor authorizes any third party to assume on its behalf, any other liabilities with respect to the sale of the product.
9. The warranties as outlined in this document do not apply to non-accessories used in conjunction with the installation of this product.
10. Specific legal rights provided; additional rights may vary by state. Warranty void if prolonged exposure to dampness, unauthorized alteration, willful abuse, accident, misuse, or lack of original purchase receipt.

WARRANTY REDEMPTION

Reach out to Heat Storm customer service at 435-752-6611 during the warranty period. Please have your sales receipt, purchase location, and product model information ready. Troubleshooting support will be offered over the phone. If the issue persists, you may be requested to email proof of purchase and a photo of the manufacturer sticker to cs@heatstorm.com.

Replacement parts:
In some cases, we may send you a replacement part along with repair instructions. This is classified as an authorized repair and does not void your warranty.

Unit repairs:
If the situation warrants, we will have you send the defective product to us for inspection. Our technicians will repair the product or provide a new unit if your heater is deemed irreparable. For units beyond the 30-day return policy, shipping costs are the consumers responsibility. If interested in our discounted shipping rates, kindly inform your customer service representative.



Need help?

435-752-6611 cs@heatstorm.com heatstorm.com