Outdoor Privacy Screen

Assembly Instruction

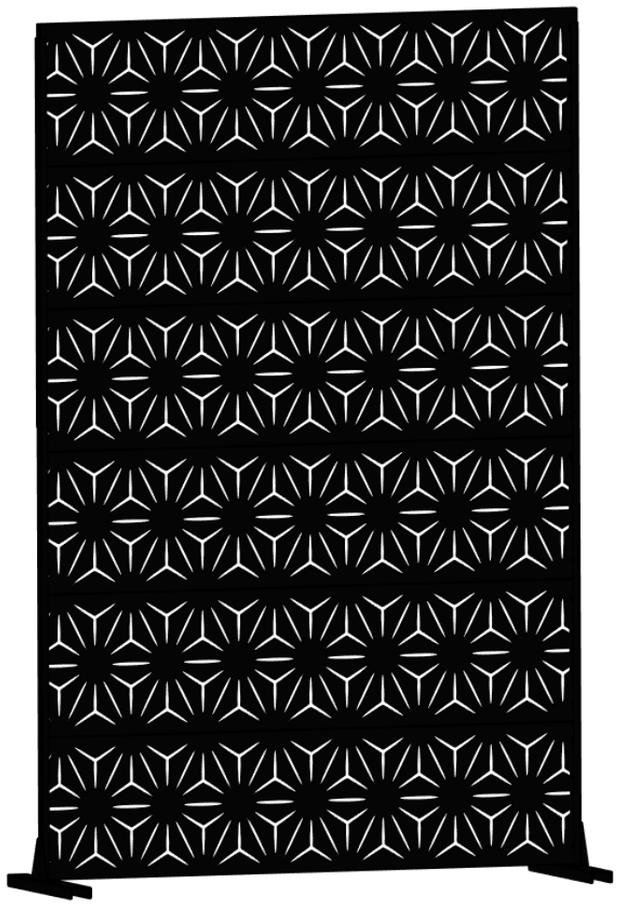

size：1830*1200

Before Assembling

If the privacy screen will be used in a strong wind area,we highly recommend you using four Hex-Head Sleeve Anchors to fix the privacy screen on solid ground.

Before assembling, we recommend:

1. Wear Gloves.

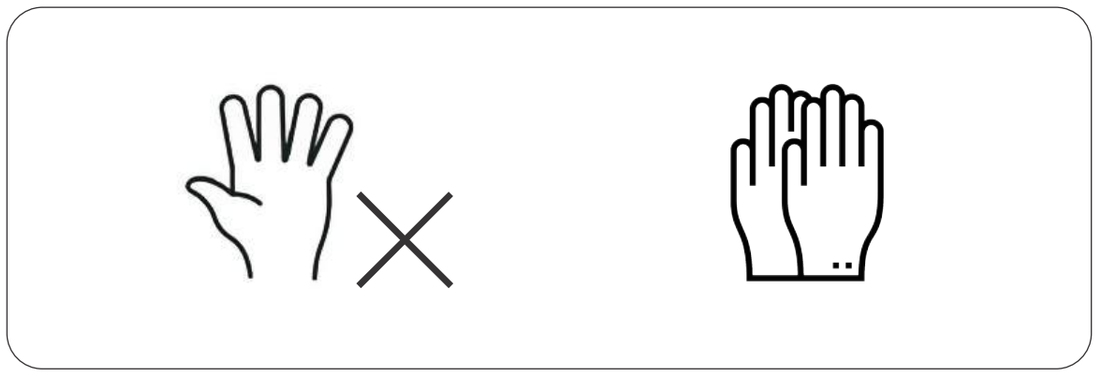

2.Assembling on a soft mat to prevent from scratch and scuf marks.

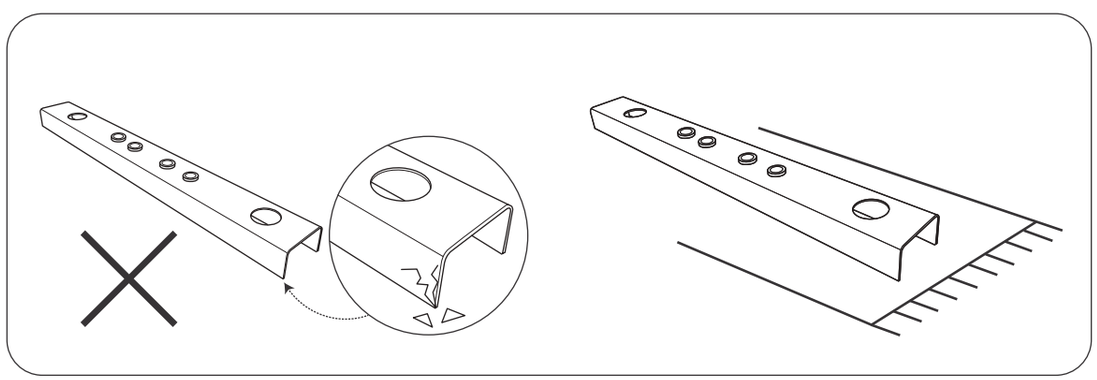

3. Ask for a Helping Hand.

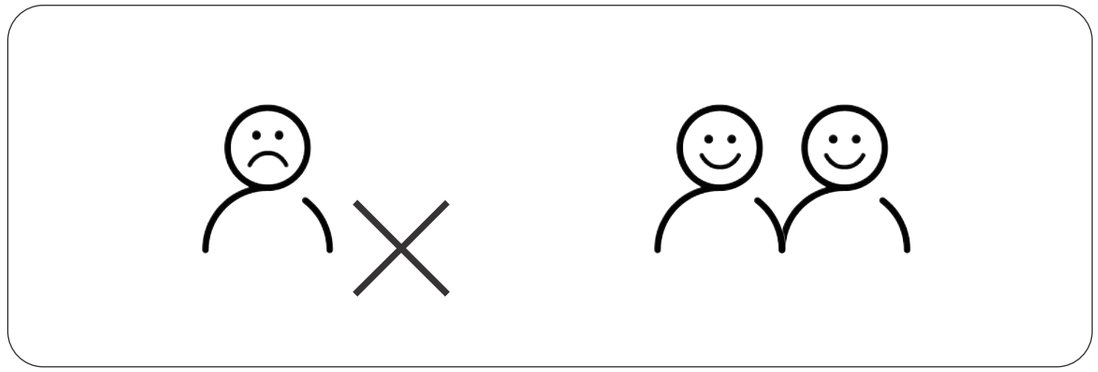

4. Use Hex-Head Sleeve Anchors to fix the privacy screen on solid ground if necessary.

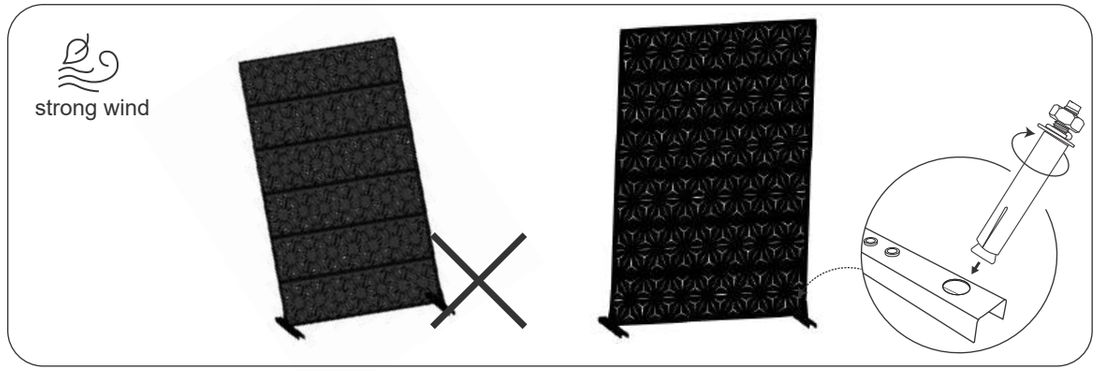

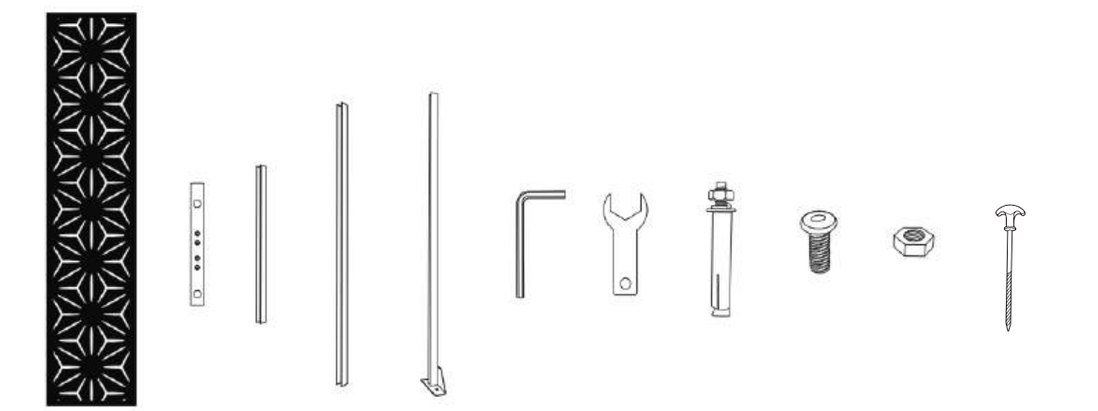

Ⓐ	Ⓑ	Ⓒ	Ⓓ	Ⓔ	Ⓕ	Ⓖ	Ⓙ	Ⓚ	Ⓛ	Ⓜ
6pcs	2pcs	(2pcs)*	2pcs	2pcs	1 pcs	1pcs	4pcs	66pcs	58pcs	4PCS

Horizontally Install

1. Secure part E to base B using part H.

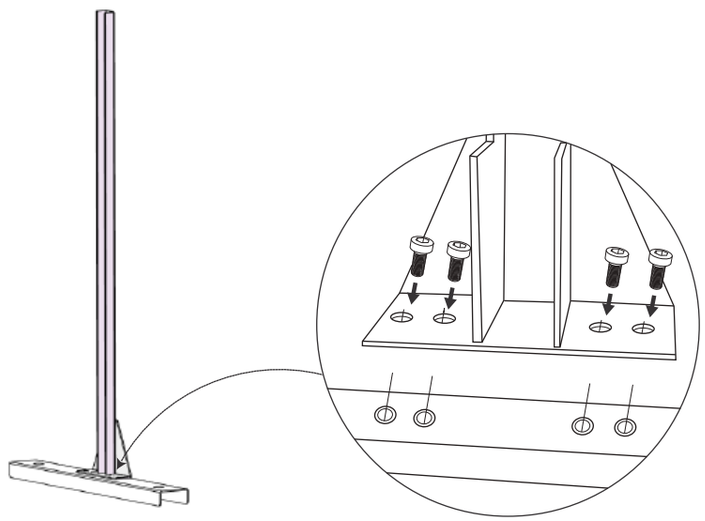

2.Use screw H to secure panel A and accessory E. Select the hole position ④.

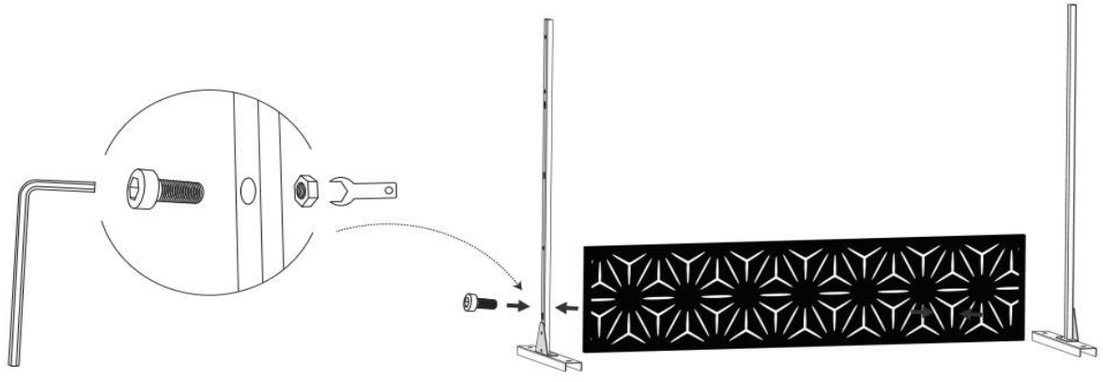

Horizontally Install

3.Fasten the bottom and middle panels A using screws.

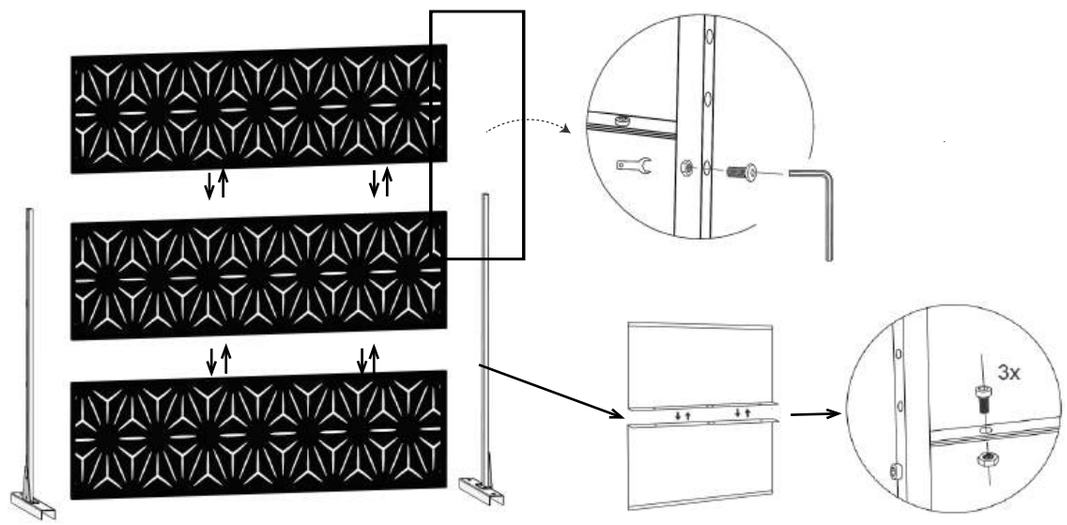

4.Fix the accessory stiffener C at the middle connection of accessory D and E with screw H.

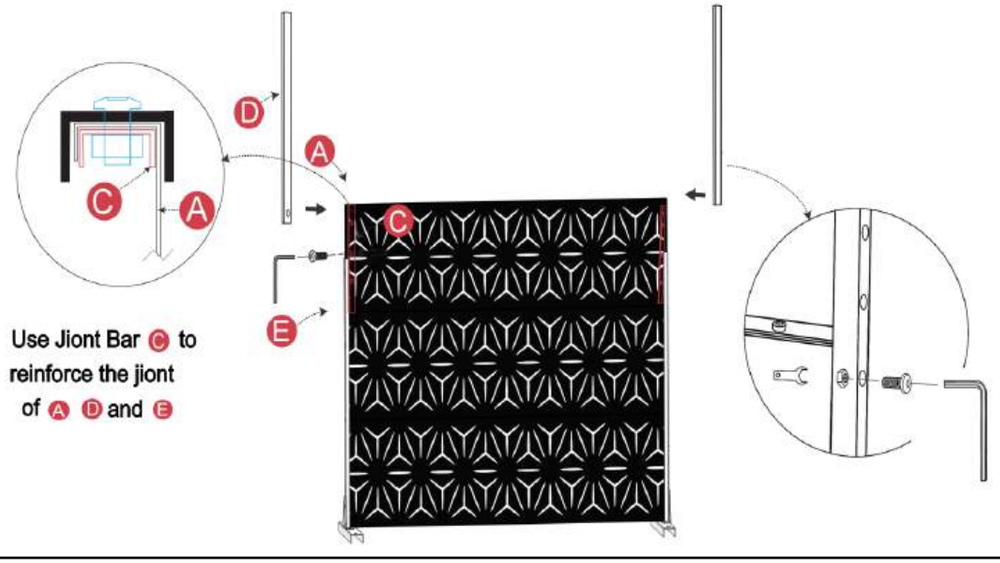

5.Place the last panel A directly into the fixed accessory D U-shape slot.

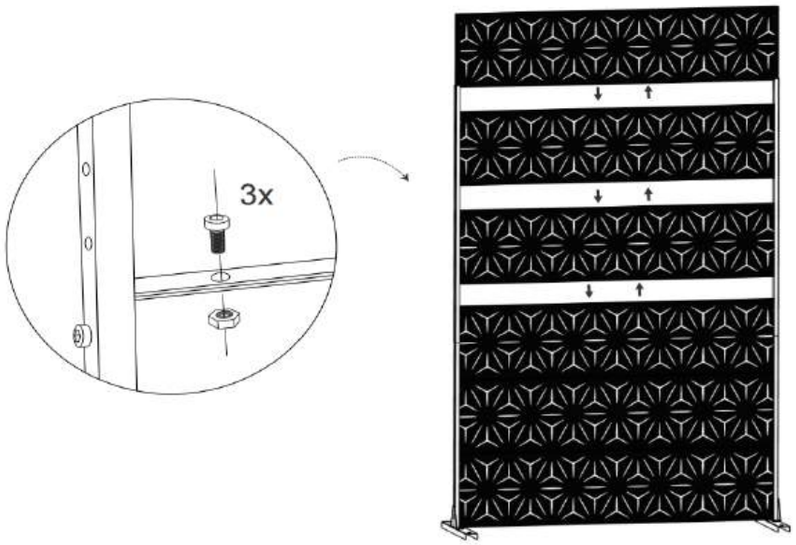

6.Fasten the accessory D&E to the panel A using screws.

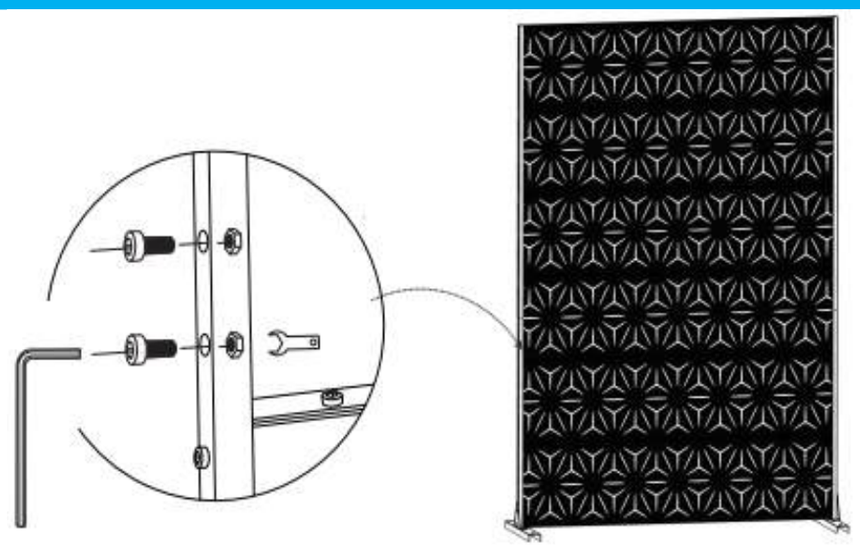

7.Use accessory J to fix base B and accessory E on the ground.

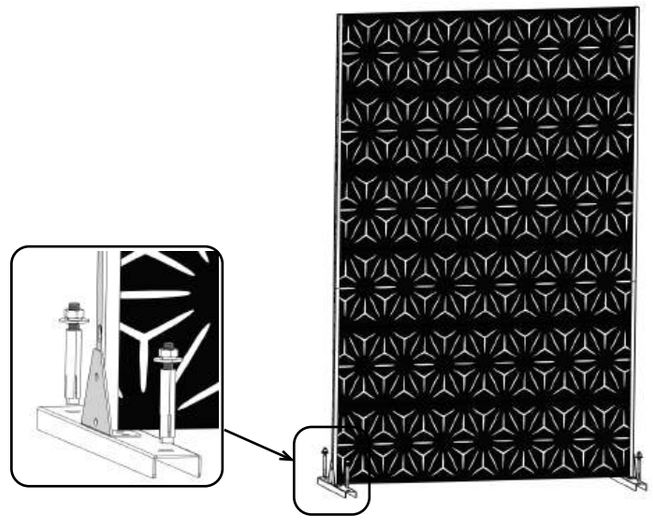

8.Use accessory M to fix base B and accessory E on the ground.

