PowerXL™
products that excel

DUO NUTRISEALER

Owner's Manual

Save These Instructions – For Household Use Only

MODEL: VS1 **POWER:** 140W

When using electrical appliances, basic safety precautions should always be followed. Do not use the ***PowerXL Duo NutriSealer™*** until you have read this manual thoroughly.

Visit ***TristarCares.com*** for tutorial videos, product details, and more.
Guarantee Information Inside

C ETL LISTED US
Intertek

Table of Contents

IMPORTANT SAFEGUARDS	***3***
Parts & Accessories	***4***
Instructions For Use	***6***
Cleaning & Storage	***13***
Troubleshooting	***14***
Frequently Asked Questions	***14***
Money-Back Guarantee	***15***

Appliance Specifications

Model Number	Supply Power	Rated Power	Maximum Bag Width:	External Dimensions	Cord Length
VS1	120V ~60Hz	140W	10.25"	17.87" x 3.27" x 2.91"	47.24"

IMPORTANT SAFEGUARDS

⚠ WARNING

PREVENT INJURIES! – CAREFULLY READ ALL INSTRUCTIONS BEFORE USE!

When using electrical appliances, always follow these basic safety precautions.

1. **READ ALL INSTRUCTIONS.**
2. This appliance is not intended for use by persons (including children) with reduced physical, sensory, or mental capabilities or lack of experience and knowledge unless they are given supervision or instruction concerning use of the appliance by a person responsible for their safety.
3. Close supervision is necessary when any appliance is used by or near children.
4. **DO NOT** place on or near a hot gas or electric burner or in a heated oven.
5. **DO NOT** place your appliance on a cooktop, even if the cooktop is cool, because you could accidentally turn the cooktop on, causing a fire, damaging the appliance, your cooktop, and your home.

6. **DO NOT** use this appliance on wet surfaces or outdoors.
7. The appliance will not seal if the Sealing Arm is not closed and locked.
8. To protect yourself from electric shock, **NEVER** immerse the appliance or the power cord in water or other liquids.
9. **THIS APPLIANCE HAS A POLARIZED PLUG** (one blade is wider than the other). To reduce the risk of electric shock, this plug is intended to fit into a polarized outlet only one way. If the plug does not fit fully into the outlet, reverse the plug. If it still does not fit, contact a qualified electrician. **DO NOT ATTEMPT** to modify the plug in any way.
10. **DO NOT** operate any appliance if it has a damaged cord or plug, if it is not working properly, or if it has been damaged or dropped. Return the appliance to an authorized service facility for examination, repair, or adjustment.
11. To disconnect, remove the plug from the wall outlet. Do not disconnect by pulling on the cord.
12. This appliance should be serviced **ONLY** by qualified service technicians. Contact Customer Service using the information located on the back of this manual.
13. This appliance is for home use only. If the appliance is used improperly or for professional or semi-professional purposes or if it is not used according to the instructions in the user manual, the guarantee becomes invalid and Tristar will not be held liable for damages.
14. **DO NOT** use this appliance for anything other than its intended use.
15. **UNPLUG** the appliance from outlet when not in use and before cleaning. **ALLOW** to cool before handling, putting on or taking off parts, cleaning, or storing.
16. **DO NOT** use any materials or accessories other than those recommended by the manufacturer because they may cause injuries.
17. The Reusable Valve Bags are **NOT MICROWAVE SAFE.**
18. **DO NOT** touch the heating wire when hot.
19. **NEVER** pour liquid into the appliance.
20. **NEVER** connect this appliance to an external timer switch or separate remote-control system.
21. **DO NOT** let cord hang over edge of table of counter, or touch hot surfaces
22. **USE CAUTION** while vacuum sealing liquids.
23. A short power-supply cord is provided to reduce the risks resulting from becoming entangled in or tripping over a longer cord. Extension cords are available and are not prohibited from being used when care is exercised in their use. When an extension cord is used:
    a) The marked electrical rating of the detachable power-supply cord or extension cord shall be no less than the marked electrical rating of the product;
    b) The longer cord shall be arranged so that it does not drape over the counter-top or tabletop where it is capable of being tripped over, snagged, or pulled on unintentionally, especially by children.
24. **SAVE THESE INSTRUCTIONS.**

For California Residents

WARNING:
Cancer and Reproductive Harm - www.P65Warnings.ca.gov.

SAVE THESE INSTRUCTIONS – FOR HOUSEHOLD USE ONLY.

Parts & Accessories

1. **MAIN BODY**
2. **SEALING ARM**
3. **CONTROL PANEL**

- **Power Light Indicator:** This light turns on when the appliance is plugged in.
- **Vacuum & Seal Button:** Press to vacuum and automatically seal a bag inside the appliance.
- **Seal Only Button:** Press to seal a bag without using vacuum. Reseal cereal, snack, and potato chip bags.
- **Vacuum Only Button:** Press when using the Vacuum Tube Attachment after the attachment is securely fastened.

4. **BUILT-IN BAG CUTTER:** Use to cut and customize resealable bags to any size.
5. **LATCH LOCK:** Snaps shut after Sealing Arm is closed.
6. **POWER CORD**
7. **ROLL OF RESEALABLE BAGS**
8. **VACUUM TUBE ATTACHMENT (VTA)**
9. **BOTTLE STOPPER AND COVER***
10. **REGULAR CANNING JAR SEALER***
11. **WIDE-MOUTH CANNING JAR SEALER***
12. **1.16-QT. CONTAINER***
13. **2.32-QT.CONTAINER***
14. **SMALL REUSABLE VALVE BAG (1 QT.)***
15. **LARGE REUSABLE VALVE BAG (1 GALLON)***

NOTE: Accessories 7, 9–15 are both resealable and vacuum sealable.

CAUTION: The Reusable Valve Bags and Containers are not microwave safe.

* May be sold separately.

Parts & Accessories

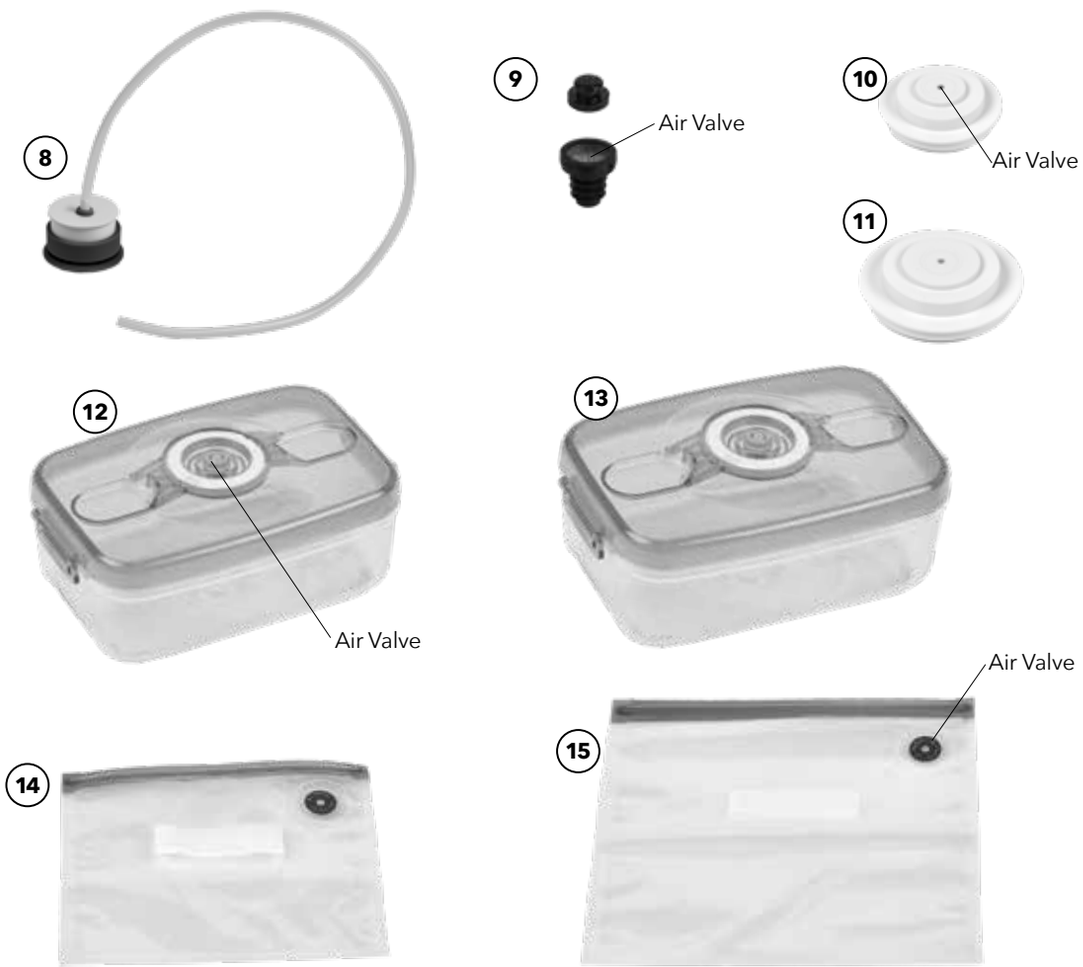

IMPORTANT: Please make sure that your appliance has been shipped with the components that you ordered (some accessories may be sold separately). Check everything carefully before use. If any part is missing or damaged, do not use this product. Contact Tristar using the customer service number located on the back of this manual.

NOTE: Unpack all listed contents from the packaging. Contents vary by model. Please remove any clear or blue protective film on the components before use.

TRISTARCARES.

To purchase other accessories for your product, go to tristarcares.com

Instructions For Use

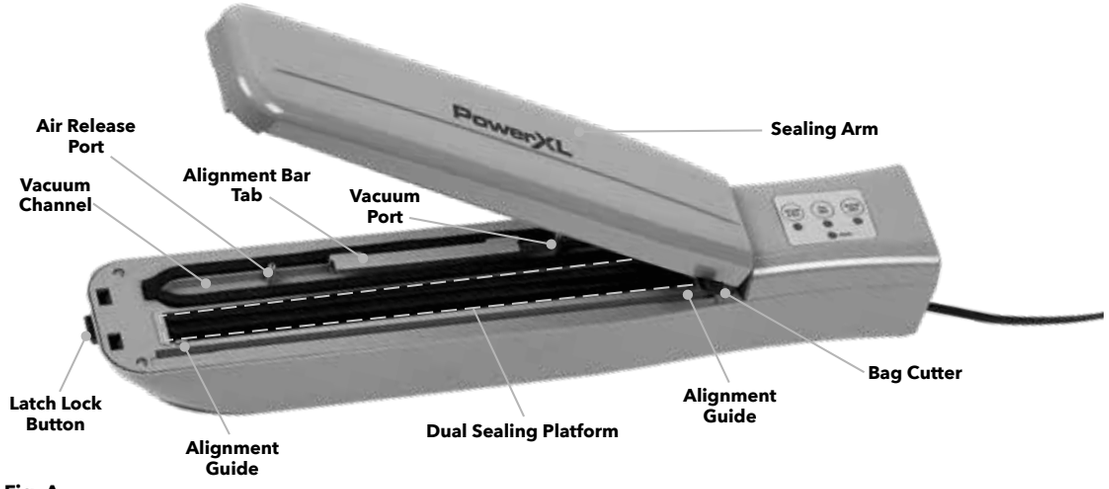

Fig. A

Fig. B

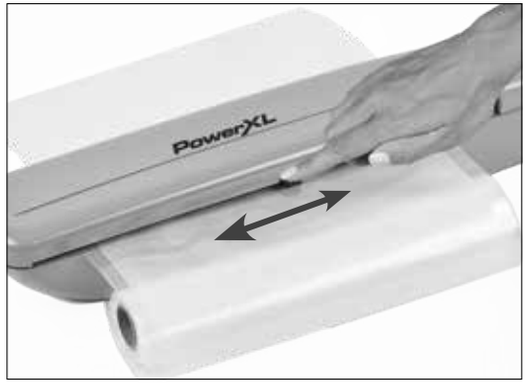

Fig. C

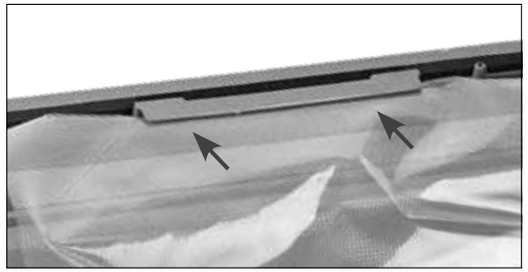

Fig. D

Instructions For Use

Making & Sealing a Bag from the Resealable Roll

1. Press the Latch Lock Button to open the Sealing Arm.
2. Pull a length of bag from the roll large enough to fit the contents being sealed. Include at least 3 inches of empty space in the bag to allow enough space for the material to be sealed and the bag to seal tightly.
3. Place the length of bag material on the Sealing Platform. Align the edges of the bag material with the Alignment Guide.
4. Close the Sealing Arm and press down on the Sealing Arm near the Latch Lock Button until the Sealing Arm clicks into place. Only a little pressure applied to the end of the Sealing Arm is required to lock the Sealing Arm (see **Fig. B**).
5. Starting at one end of the Sealing Arm, slide the Bag Cutter all the way to the other side of the Sealing Arm to cut the bag material to your desired length (see **Fig. C**). Always return the Bag Cutter to one end of the appliance before cutting.
6. Plug the Sealer into a power outlet. The Power Indicator on the Control Panel will illuminate.
7. Press the Seal Only Button to seal the bottom of the bag. The light next to the selected button will illuminate. When the bag is sealed, the light will turn off.
8. Open the Sealing Arm to remove the bag. It is now ready for filling and sealing.

Vacuum Sealing Bags from the Resealable Roll

1. Plug the Sealer into a wall outlet. The Power Indicator on the Control Panel will illuminate.
2. Press the Latch Lock Button to open the Sealing Arm.
3. Pre-seal one edge of a bag. Fill the bag with the desired contents. Avoid overfilling the bag; leave at least 3 inches of flat bag material between the bag contents and the top of the bag. Additional space might be required to vacuum and seal properly if the item being sealed is thick.
4. Place the bag on the Sealing Platform. Center the bag between the Alignment Guide and slide the top edge of the bag underneath the Alignment Bar Tab with the textured side of the bag facing down (see **Fig. D**).
5. Close the Sealing Arm and press down on the Sealing Arm near the Latch Lock Button until the Sealing Arm clicks into place. Only a little pressure applied to the end of the Sealing Arm is required to lock the Sealing Arm (see **Fig. B**).
6. Press the Seal Only Button to seal a bag without vacuum sealing, or press the Vacuum & Seal Button to vacuum seal the bag. The light next to the selected button will illuminate when pressed and then turn off when the sealing cycle is complete. The appliance will vacuum most of the air out of the bag and automatically seal your bag.
7. Allow 10 seconds between Vacuum Sealing.
   CAUTION: Continuously sealing within a short period of time will cause the appliance to enter sleep mode for until the appliance cools (1–2 minutes).

   NOTE: The appliance should only be opened when lying on a flat surface. Vacuum sealing bags containing liquid might cause the vacuum channel to contain residual liquid.

Vacuum Sealing Delicate Foods

When sealing delicate foods, such as pastries and breads, do not fully vacuum seal the bag. Otherwise, the food might be damaged by the process. Instead, remove only some of the air from the bag before sealing:

1. Push the Vacuum & Seal Button to start the vacuum-sealing process.
2. When some of the air has been removed from the bag, press the Vacuum & Seal Button again to stop the vacuum-sealing process.
3. Press the Seal Only Button to finish sealing the bag.

Creating Individual Packs from the Resealable Roll

Make personal-size bags by sectioning off one resealable bag into separate compartments for snacks, marinades, personal items, and more. This example illustrates how to create six personal-size bags.

1. Refer to "Making & Sealing a Bag from the Resealable Roll" section for information on how to seal the bottom of the bag. The bag should be a maximum of 10.25 inches long to fit inside the appliance.
2. Position a bottom-sealed bag horizontally on the Sealing Platform, dividing it in half (see **Fig. E**).
3. Close the Sealing Arm and press down on the Sealing Arm near the Latch Lock Button until the Sealing Arm clicks into place. Only a little pressure applied to the end of the Sealing Arm is required to lock the Sealing Arm.
4. Press the Seal Only Button to seal the bag down the middle and create two long vertical compartments.
5. Remove the bag and fill the compartments one third of the way full with contents. Return the bag to the Sealing Platform, leaving at least 3 inches of free space above the bag's contents. Use the Seal Only Button to seal the first two compartments (see **Fig. F**)
6. Remove the bag and fill the next row of compartments one third full. Return the bag to the Sealing Platform, leaving at least 3 inches of free space above the bag's contents. Use the Seal Only Button to seal the third and fourth compartments (see **Fig. G**).
7. Remove the bag and fill the final row of compartments one third full. Return the bag to the Sealing Platform, leaving at least 3 inches of free space above the bag's contents. Use the Seal Only Button to seal the fifth and sixth compartments (see **Fig. H**).
8. Use scissors to cut the multipacks into separate packs by cutting down the middle of the seams (see **Fig. I**).

CAUTION: Continuously sealing within a short period of time will cause the appliance to enter sleep mode until the appliance cools (1–2 minutes).

Fig. E

Fig. F

Instructions For Use

Fig. G

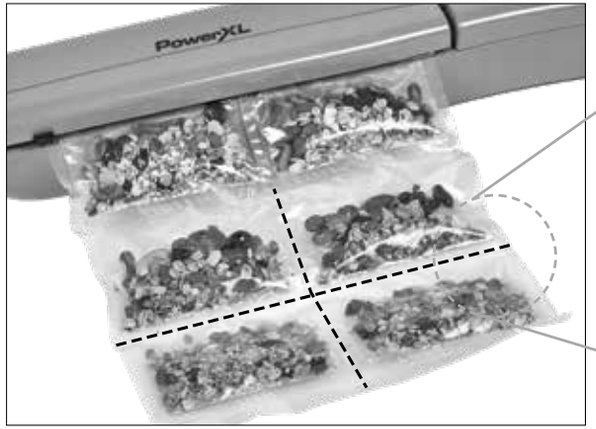

Fig. H

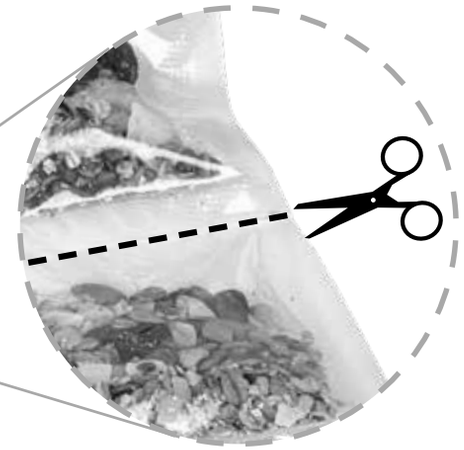

Fig. I
Separate each individual pack by cutting in the middle of the double seal lines.

Connecting the Vacuum Tube Attachment

The Vacuum Tube Attachment (VTA) is the accessory that connects to your Reusable Valve Bags, jars, containers, and bottles and vacuums out the air. It consists of four pieces (see **Fig. K**).

NOTE: To vacuum seal Reusable Valve Bags, jars, or bottles, be sure to use the Sealer Cap. For vacuum sealing resealable containers, you may omit the Sealer Cap.

Connecting the VTA to Vacuum-Sealable Containers

1. Attach the VTA without the Sealer Cap. Push the small end of accessory tubing onto the Vacuum Port on the inside of appliance (see **Fig. L**).
2. Place and hold firmly the large end of the VTA onto the Air Valve of the container (see **Fig. M**).
3. Press Vacuum Only Button to vacuum air out of the container.
4. The Indicator Light will turn off when completed.

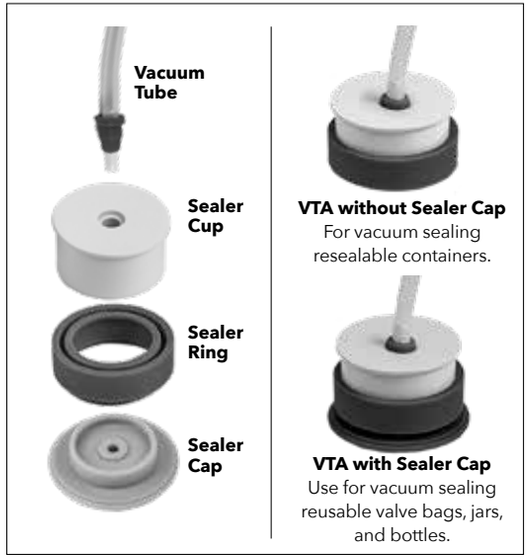

Fig. K

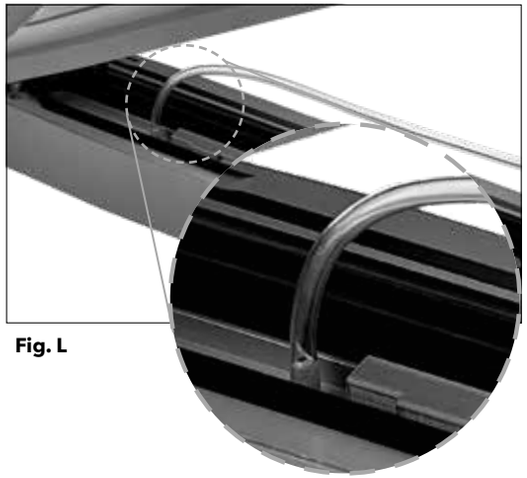

Fig. L

Fig. M

The Vacuum-Sealable Containers feature a date indicator on the top of the containers' lids. You can set the month (1–12) and the day (1–31) to note when the container was sealed (see **Fig. N**). Setting the date when a container was sealed helps you keep track of the freshness of the food stored in the container.

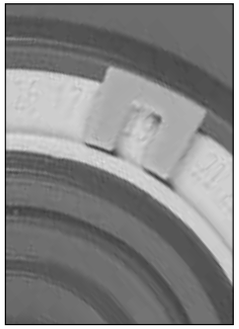

Fig. N

Connecting the VTA to Bottles and Reusable Valve Bags

1. Push the small end of the accessory tubing onto the Vacuum Port on the inside of the appliance (see **Fig. L**).
2. Place and firmly hold the large end of the VTA onto the Air Valve of the Bottle Stopper (see **Fig. O**) or Reusable Valve Bag (see **Fig. P**). Be sure to include the Sealer Cap with the VTA.
3. Press Vacuum Only Button to vacuum out the air of the bottle or Reusable Valve Bag.
4. The Indicator Light will turn off when completed. **NOTE:** The VTA can be used to seal reusable valve bags of any size.

Fig. O

Fig. P

Connecting the VTA to a Canning Jar

1. Push the small end of the accessory tubing onto the Vacuum Port on the inside of the appliance (see **Fig. L**).
2. Set the Canning Jar Lid onto the jar opening and then fully cover the top of the Canning Jar Lid with the Canning Jar Sealer.
3. Place and firmly hold the large end of the VTA onto the air valve of the Jar Sealer). Be sure to include the Sealer Cap of the Vacuum Tube Attachment (see **Fig. Q**).
4. Press Vacuum Only Button to vacuum out the air of the jar. The Indicator Light will turn off when completed.
5. Carefully remove the Jar Sealer and VTA, taking care to not break the seal.
6. Screw on the Canning Jar Ring.

Fig. Q

Instructions for Use

Important Tips

- Vacuum sealing is **NOT** a substitute for the heat process of canning. Perishables still need to be refrigerated or frozen.
- While this appliance is compatible with other vacuum-sealable containers, for best results, use the accessories and containers shown in this instruction manual.
- During the vacuum-sealing process, small amounts of liquids, crumbs, or food particles can be inadvertently pulled into the Vacuum Channel. Clean the Drip Tray after each use.
- For best results, seal with with the textured side of the bag facing down.
- Thinner liquids, such as juices or chicken soup, should use the Seal Only Button.
- Avoid overfilling bags. Always leave at least 3 inches of bag material between bag contents and top of the bag. this allows the contents to properly vacuum seal and prevents the bag from pulling out of the Vacuum Channel during the sealing process. In addition, leave at least 1 inch of bag material for each time you plan to reuse a bag.
- You will need at least 4 inches of extra space for food with liquids to ensure liquid does not enter the vacuum channel and interfere with the vacuuming process.
- To prevent wrinkles in the seal when vacuum sealing bulky items, gently stretch the bag flat while inserting bag into the Alignment Bar. Bags placed in the Vacuum Channel must be wrinkle-free to avoid air leakage.

Vacuum Sealing and Food Safety

The vacuum-sealing process extends the life of foods by removing most of the air from the sealed container, thereby reducing oxidation, which affects the nutritional value, flavor, and overall quality of food. Removing air can also inhibit the growth of microorganisms, including mold, yeast, and bacteria.

Vacuum sealing is not a substitution for refrigerating or freezing food. You can significantly reduce the growth of microorganisms at temperatures of 40° F/4°C or below. Freezing food at 0° F/–17° C does not kill microorganisms but does stop them from growing. For long-term storage, always freeze perishable food that has been vacuum sealed and keep the food refrigerated after thawing.

Vacuum sealing is also not a substitute for canning and cannot reverse the deterioration of food. Vacuum sealing can only slow changes food in quality. It is difficult to predict how long foods will retain their top-quality flavor, appearance, or texture because these characteristics depend on the age and condition of the food on the day it was vacuum sealed.

IMPORTANT: Vacuum sealing is **NOT** a substitute for refrigeration or freezing. Any perishable foods that require refrigeration must still be refrigerated or frozen after sealing.

Re-Sealing Bags

Follow these instructions to reseal a bag that has already been opened.

1. Plug the Sealer into a wall outlet. The Power Indicator on the Control Panel will illuminate.
2. Press the Latch Lock Button to open the Sealing Arm.
3. Place bag on the Sealing Platform. Center the bag between Alignment Guide and slide the top edge of the bag underneath the Alignment Bar Tab.
4. Close the Sealing Arm and press down on the Sealing Arm near the Latch Lock Button until the Sealing Arm clicks into place.
5. Press the Seal Only Button to seal bag.
6. Allow 10 seconds between vacuum sealing. **CAUTION:** Continuously sealing within a short period of time will cause the appliance to enter sleep mode until the appliance cools (1–2 minutes).

Cleaning & Storage

Cleaning the Appliance

1. Always unplug the appliance before cleaning.
2. Wipe clean with a damp cloth.
3. Ensure that the Vacuum Port and Air Release Port are free of debris.
4. After vacuum sealing with liquids that contain raw fish, meat, or poultry, clean and sanitize the entire appliance.

Cleaning the Vaccum Channel

1. Remove the Alignment Bar.
2. Use a damp sponge or cloth to wipe out any liquid or debris from the Vacuum Channel.

Cleaning the Accessories

For best results, hand wash all accessories.

Storing the Appliance

Store the appliance in a clean, dry place.

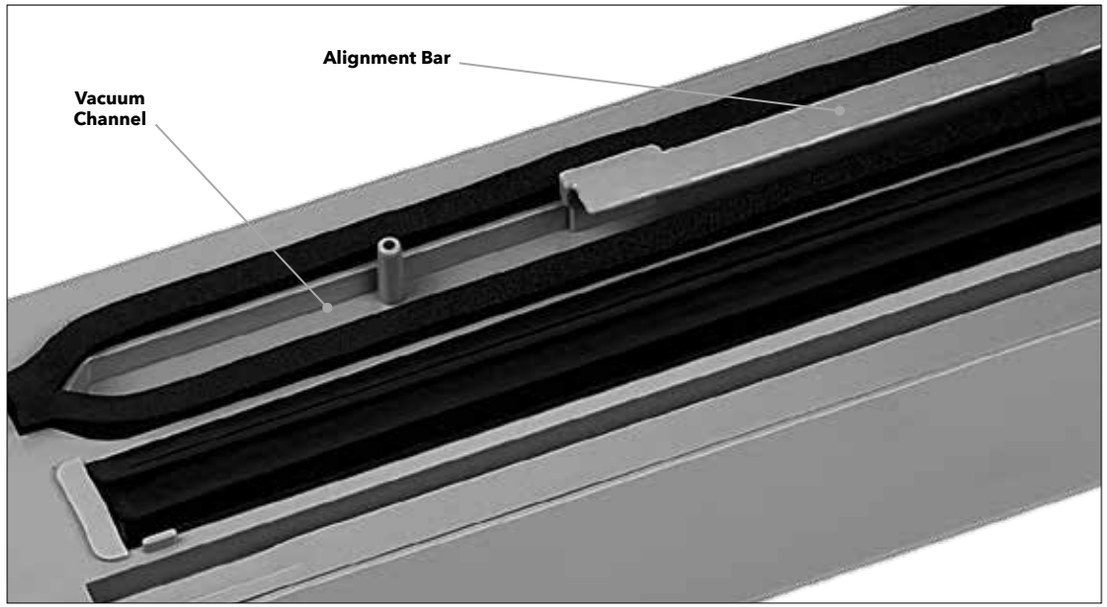

Fig. R

Troubleshooting

Use the troubleshooting guide as a first step to resolve any issues you may be experiencing. Contact customer service using the contact information on the back of this manual for any servicing that requires disassembly of the appliance.

WARNING: To reduce risk of personal injury, unplug the appliance and allow it to cool before troubleshooting.

Problem	Possible Reason	Possible Solution
My bag is not sealing or the seal is incomplete.	The bag material might be too thick.	Without removing the bag, seal the bag a second time immediately after sealing it the first time.
Sealing light is blinking.	The appliance needs to cool down.	Let the appliance cool between continuous sealing.
The appliance continues to vacuum without sealing or the appliance is not vacuuming air out of the bag.	The bag is not aligned correctly.	Ensure the bag is aligned with the Alignment Bar before sealing.
	There is a hole in the bag.	Use a new bag without a hole in it.
My chip bag is melting when sealing.	The bag is too thin.	Use only recommended bags shown in this instruction manual.
		Use a shorter sealing time with thinner bags.
The appliance will not turn on.	Power cord not plugged in.	Plug the power cord into a working power outlet.
	Internal fuse is blown.	Contact customer service using the contact information on the back of this manual.
The vacuum container accessory is sealing too slowly.	The seal ring has not been assembled properly.	Ensure the seal ring has been assembled properly (see the "Connecting the Vacuum Tube Attachment" section).
	There is a slight gap between the lid and body of the vacuum container.	Ensure that there is no gap between the lid and body of the vacuum container.

Frequently Asked Questions

1. ***Can I vacuum seal an opened bag of chips?***
   Opened chip bags can only be sealed, not vacuum sealed.
2. ***How do I know when the appliance is finished vacuuming?***
   After pressing the Vacuum & Seal Button, the appliance will vacuum and then automatically switch to seal. The Vacuum & Seal Light will turn off when complete.
3. ***What types of non-food items can I seal?***
   You can seal small metal items, jewelry, silverware, toiletries, cosmetics, medicine bottles, books, magazines, and important documents. Anything you want to protect from dust, air, or moisture, or that may spill.

For videos and additional information on using this appliance, scan this QR code with your smartphone or tablet:

PowerXL™ products that excel

DUO NUTRISEALER

90-Day Money-Back Guarantee

The ***PowerXL Duo NutriSealer*** is covered by a 90-day money-back guarantee. If you are not 100% satisfied with your product, return the product and request a replacement product or refund. Proof of purchase is required. Refunds will include the purchase price, less processing and handling. Follow the instructions in the Return Policy below to request a replacement or refund.

Replacement Guarantee Policy

Our products, when purchased from an authorized retailer, include a 1-year replacement guarantee if your product or component part does not perform as expected, the guarantee extends only to the original purchaser and is not transferable. If you experience an issue with one of our products within 1 year of purchase, return the product or the component part for replacement with a functionally equivalent new product or part. The original proof of purchase is required, and you are responsible to pay to return the appliance to us. In the event a replacement appliance is issued, the guarantee coverage ends six (6) months following the receipt date of the replacement appliance or the remainder of the existing guarantee, whichever is later. Tristar reserves the right to replace the appliance with one of equal or greater value.

Return Policy

If, for any reason, you would like to replace or return the product under the money-back guarantee, your order number can be used as the return merchandise authorization number (RMA). If the product was purchased in a retail store, return the product to the store or use "RETAIL" as the RMA. Return your product to the address provided below for a replacement, which will incur no additional processing and handling fees, or for the refund of your purchase price, less processing and handling. You are responsible for the cost of returning the product. You can locate your order number at www.customerstatus.com. You can call customer service at 973-287-5106 or email info@tvcustomerinfo.com for any additional questions. Pack the product carefully and include in the package a note with (1) your name, (2) mailing address, (3) phone number, (4) email address, (5) reason for return, and (6) proof of purchase or order number, and (7) specify on the note whether you are requesting a refund or replacement. Write the RMA on the outside of the package.

Send the product to the following return address:

PowerXL Duo NutriSealer
Tristar Products
500 Returns Road
Wallingford, CT 06495

If the replacement or refund request has not been acknowledged after two weeks, please contact Customer Service at 973-287-5106.

Refund

Refunds requested within the money-back guarantee timeframe will be issued to the payment method used at purchase if the item was purchased directly from Tristar. If the item was purchased from an authorized retailer, proof of purchase is required, and a check will be issued for the item and sales tax amount. Processing and handling fees are non-refundable.

PowerXL™ products that excel

DUO NUTRISEALER

We are very proud of the design and quality of our
PowerXL Duo NutriSealer™.

This product has been manufactured to the highest standards. Should you have any questions, our friendly customer service staff is here to help you.

For parts, recipes, accessories, and everything PowerXL, go to tristarcares.com or scan this QR code with your smartphone or tablet:

To contact us,
email us at info@tvcustomerinfo.com
or call us at **973-287-5106**.

Distributed by Tristar Products, Inc.
Fairfield, NJ 07004
© 2022 Tristar Products, Inc.
Made in China
PXL-DNS_IB_RTL_ENG_V7_220314

Intertek