8-INCH 6.5-AMP ELECTRIC POLE CHAIN SAW

Model SWJ802E/ SWJ802E-GRY/SWJ802E-PRP

Form No. SJ-SWJ802E/ SWJ802E-GRY/SWJ802E-PRP-880E-M

A Division of Snow Joe®, LLC

OPERATOR'S MANUAL

IMPORTANT!

Safety Instructions

All Operators Must Read These Instructions Before Use

Always follow these safety guidelines. Failure to do so may result in serious bodily injury or death.

⚠**DANGER!** This indicates a hazardous situation, which, if not followed, will result in serious injury or death.

⚠**WARNING!** This indicates a hazardous situation, which, if not avoided, could result in serious injury or death.

⚠**CAUTION!** This indicates a hazardous situation, which, if not avoided, could result in minor or moderate injury.

General Safety

⚠**WARNING!** When using electric yard tools, basic safety precautions should always be followed to reduce the risk of fire, electric shock, and personal injury, including the following:

1. **Keep guards in place –** Protective guards should be checked periodically to ensure they are properly fitted and in correct working order.
2. **Remove adjusting keys and wrenches –** Check that adjusting wrenches are removed from the saw before turning it on.
3. **Keep work area clean and well-lit –** Clear work area of branches and limbs after each cutting session. Cluttered areas invite accidents.
4. **Do not use in dangerous environments –** Do not use power tools in damp or wet locations.
5. **Do not use the pole chain saw in the rain.**
6. **Keep bystanders and children away –** All bystanders, including children and pets, should be kept a safe distance away from the work area.
7. **Do not force the tool –** It will do the job effectively and safely if it is used at the rate for which it was designed.
8. **Use the right tool –** Do not force the tool or any attachment on the tool to do a job for which they were not designed.
9. **Wear proper apparel –** Do not wear loose articles of clothing or jewelry since such items may get caught in moving parts. Use of heavy-duty rubber gloves, substantial non-skid footware, and close-fitting clothing is recommended when working outdoors with power tools.
10. **Wear protective hair coverings to contain long hair.**
11. **Always wear safety glasses and ear defenders to provide eye and ear protection –** Everyday eyeglasses only have impact resistant lenses and do not provide the same protection as safety glasses.
12. **Wear face or dust masks –** If the cutting operation is dusty, the use of a face or dust mask specially designed to filter out miscoscopic particles is recommended.
13. **Do not overreach –** Keep proper footing and balance at all times.
14. **Maintain tools with care –** Keep tools sharp and clean for best and safest performance. Follow instructions for lubricating and changing accessories.
15. **Disconnect tool –** Disconnect the pole chain saw from the power supply when not in use, before servicing, when transporting, or when changing the chain or other accessories.
16. **Reduce the risk of unintentional starting –** Make sure the switch is in the OFF position before plugging the tool into a power source.
17. **Use recommended accessories –** Consult the owner's manual for recommended accessories. The use of improper accessories may cause risk of injury.
18. **Check for damaged parts –** Before each use, repair or replace any guard or part that is damaged. In addition, check for alignment of moving parts, binding of moving parts, breakage of parts, and any other conditions that may affect the tool's operation.
19. **Never leave tool unattended while it is running –** Turn the power OFF by removing the power cord directly from its socket. Do not leave the saw until the cutting bar comes to a complete stop.
20. **Avoid unintentional starting –** Do not carry the pole chain saw with your finger on the switch.
21. **Do not grasp the exposed cutting blade or cutting edges when picking up or holding the saw –** Be sure to encase the cutting bar in its protective sheath when not in use.
22. **Stay alert –** Watch what you are doing. Use common sense. Do not operate the pole chain saw when you are tired.
23. **Store idle tool indoors –** When not in use, appliances should be stored indoors in a dry and high or locked-up place out of the reach of children.

© 2014 by Snow Joe®, LLC
All rights reserved. Original instructions.

SAVE THESE INSTRUCTIONS

⚠**WARNING!** Some dust and debris created by the use of the tool could contain chemicals known to the State of California to cause cancer and birth defects or other reproductive harm. Some examples of these chemicals are:

- Chemicals in fertilizers
- Compounds in insecticides, herbicides, and pesticides
- Arsenic and chromium from chemically treated lumber

Your risk from exposure to these chemicals varies, and depends on how often you do this type of work. To reduce your exposure, work in a well-ventilated area and with approved safety equipment, such as dust masks that are specially designed to filter out microscopic particles.

⚠**WARNING!** California Proposition 65:
This product contains chemicals known to the State of California to cause cancer, birth defects or other reproductive harm.

Electrical Safety

1. Ground fault circuit interrupter (GFCI) protection should be provided on the circuit(s) or outlet(s) to be used for the pole chain saw. Receptacles are available having built-in GFCI protection and may be used for this measure of safety.
2. To prevent electric shock, use only with an extension cord suitable for outdoor use, such as SW-A, SOW-A, STW-A, STOW-A, SJW-A, SJOW-A, SJTW-A, or SJTOW-A.

   Before use, check that the extension cord is in good condition. When using an extension cord, make sure to use one heavy enough to carry the current your product will draw. For lengths less than 50 ft (15 m), a No.16 AWG (or greater) extension cord should be used. An undersized cord will cause a drop in line voltage resulting in loss of power and overheating.
3. To reduce the risk of electric shock, this appliance has a polarized plug (i.e. one blade is wider than the other). Use this appliance only with a polarized UL-, CSA- or ETL-rated extension cord for outdoor, all-weather use. The appliance plug will fit into a polarized extension cord only one way.

   If the appliance plug does not fit fully into the extension cord, reverse the plug. If the plug still does not fit, obtain a correct polarized extension cord. A polarized extension cord will require the use of a polarized wall outlet. The extension cord plug will fit into the polarized wall outlet only one way. If the plug does not fit fully into the wall outlet, reverse the plug. If the plug still does not fit, contact a qualified electrician to install the proper wall outlet. Do not modify the appliance plug, extension cord receptacle or extension cord plug in any way.

⚠ WARNING! ⚠

Electric shock may cause SEVERE INJURY or DEATH. Heed these warnings:

- Do not allow any part of the pole chain saw to make contact with water while it is in operation. If the appliance becomes wet while turned off, wipe dry before starting.
- Use only a UL-, CSA- or ETL-rated extension cord for outdoor, all-weather use, such as the Snow Joe® + Sun Joe® Power Joe SJTW-A 14-gauge 50-foot extension cord with lighted end (Model PJEXT50-B). Visit snowjoe.com to purchase this extension cord online or, to order by phone, call 1-866-SNOWJOE (1-866-766-9563).
- Do not use an extension cord over 100 ft (30 m).
- Do not touch the appliance or its plug with wet hands or while standing in water. Wearing rubber boots offers some protection.

EXTENSION CORD CHART

Cord Length:	50 ft (15 m)	100 ft (30 m)
Min. Wire Gauge (A.W.G.):	16	14

4. To prevent the appliance cord from disconnecting from the extension cord during operation, make a knot with the two cords as shown in Table 1.

Table 1. Method of Securing Extension Cord

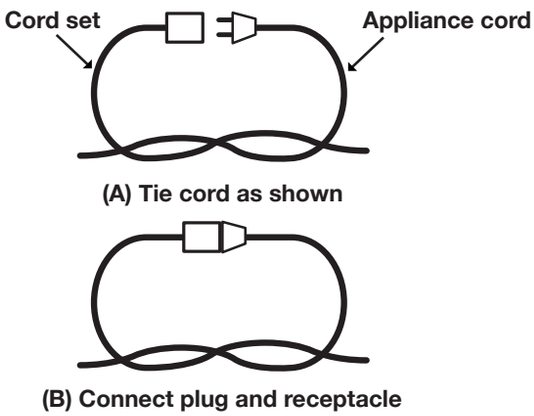

5. Do not abuse the cord. Never pull the pole chain saw by the cord or yank the cord to disconnect it from the receptacle. Keep the cord away from heat, oil, and sharp edges.

Specific Safety Rules For Pole Chain Saws

⚠**WARNING! SHOCK HAZARD! –** To protect yourself from electrocution, do not operate the pole chain saw within 50 ft (15 m) of overhead wires. Failure to follow this instruction could result in severe personal injury.

Operating Tips For Pole Chain Saws

- Stay alert. Use common sense while operating the unit.
- Keep work area clean and well-lit. Cluttered areas invite accidents.
- Note the extension cord's location relative to the tool. While operating the pole chain saw, be careful not to trip over the cord.
- Keep the cord away from the chain and the operator at all times.
- Keep children, animals, and bystanders a safe distance away from the pole chain saw and extension cord.
- Only the pole chain saw operator should be in the work area.
- Do not use the pole chain saw to cut down trees.
- Always use two hands when operating the pole chain saw. Grip the pole chain saw securely with one hand on the trigger, the other hand on the pole.
- Before starting the pole chain saw, make sure that the saw chain is not in contact with any object.
- Do not allow the pole chain saw to make contact with grounded objects such as pipes, fences, and metal posts.
- Keep all parts of the body away from the saw chain while operating the pole chain saw.
- Do not force the pole chain saw while cutting. Apply light pressure. It will perform more effectively and safely if it is used at the rate for which it was designed.
- Use extreme caution when cutting a limb that is under tension. When wood tension is released, the limb could spring back and strike the operator, causing severe injury or death.
- Do not carry a plugged-in unit. Carry the pole chain saw from one place to another with the unit unplugged. During transport, hold the pole at its balance point (close to the saw end), with the guide bar and chain facing to the rear.
- Do not cut small brush and saplings with the pole chain saw. Small branches may catch in the chain and be whipped towards the operator, which could pull the operator off balance.

Kickback

⚠**WARNING!** Kickback may occur when the nose or tip of the guide bar touches an object, or when the wood closes in and pinches the saw chain in the cut.

AVOID CONTACTING THE GUIDE BAR TIP WITH ANY OBJECT. In some cases, when the tip makes contact with an object, it may cause a fast reverse reaction, kicking the guide bar up and back towards the operator. Pinching the saw chain along the top of the guide bar may also push the guide bar rapidly back towards the operator. Either of these reactions may cause you to lose control of the pole chain saw, which could result in serious personal injury.

- Kickback safety devices on this pole chain saw include a skip chain and a low kickback guide bar. These will reduce, but not entirely prevent, kickbacks. Follow the necessary precautions indicated in this operator's manual to avoid kickbacks.
- Always use two hands when operating the pole chain saw, one hand gripping the trigger and the other hand gripping the pole. Use a firm grip. Thumbs and fingers must wrap around the trigger and the pole.
- Keep all guards in place on the pole chain saw. Make sure they are in proper working order.
- Do not overreach or extend arms above shoulder height.
- Keep solid footing and balance at all times.
- Never try cutting through two branches at the same time. Only cut one at a time.
- Do not bury the guide bar nose or try to cut by boring the guide bar nose into the wood.
- Watch for shifting of wood or other forces that may pinch the chain.
- Use extreme caution when re-entering a previous cut.
- Use the low-kickback chain and guide bar supplied with this pole chain saw. Only use genuine Snow Joe® + Sun Joe® replacement parts designed specifically for use with this pole chain saw.
- Never use a dull or loose chain. Keep the chain sharp with proper tension.

Pole Chain Saw Trimming Precautions

- Never stand directly under the limb you are trimming. Always position yourself outside the path of falling debris.
- Never stand on a ladder or other type of unstable support while using the pole chain saw.
- Keep all handles and grip surfaces clean, dry, and free from oil and grease.
- Always use both hands to operate the pole chain saw. Keep a firm, steady pressure on the pole chain saw while cutting, but do not try to cut limbs larger in diameter than the length of the guide bar.
- Keep other people and pets away from the cutting end of the pole chain saw and at a safe distance away from the work area.
- Do not use the pole chain saw near cable, electric power, or telephone lines. Maintain a minimum clearance of 50 ft (15 m) from all power lines.

Safety Symbols

The following table depicts and describes safety symbols that may appear on this product. Read, understand, and follow all instructions on the machine before attempting to assemble and operate.

Symbols	Descriptions	Symbols	Descriptions
	READ THE OPERATOR'S MANUAL(S) – Read, understand and follow all instructions in the user manual(s) before attempting to assemble and operate.		Keep bystanders and children a safe distance away.
	SAFETY ALERT – Indicates a precaution, a warning or a danger.		**WARNING!** Do not expose the unit to rain or wet conditions.
	Wear personal protective equipment, including close-fitting clothing.		**WEAR EYE AND HEARING PROTECTION –** For protection against injury, wear ear defenders and safety goggles.
	CAUTION! Avoid contacting the guide bar tip with any object. Tip contact may cause the guide bar to move suddenly upward and backwards, which may cause serious injury to the user.	50 ft (15 m)	**WARNING! SHOCK HAZARD –** Keep at least 50 ft (15 m) away from power lines. Do not overreach. Keep proper footing and balance at all times.
	DANGER! ROTATING BLADES – Keep hands and feet away from openings while the saw is running.		Wear protective gloves and non-slip footwear when using the machine and handling debris.
	SWITCH OFF! Remove plug from outlet before cleaning or conducting maintenance checks.		**SWITCH OFF!** Remove plug from outlet immediately if the cord is damaged or cut.
STOP	The rotating part will continuously run for several seconds after you turn off the machine.		Double Insulation.

Know Your Electric Pole Chain Saw

Read the owner's manual and safety instructions carefully before operating the pole chain saw. Compare the illustration below to the pole chain saw in order to familiarize yourself with the location of the various controls and adjustments. Save this manual for future reference.

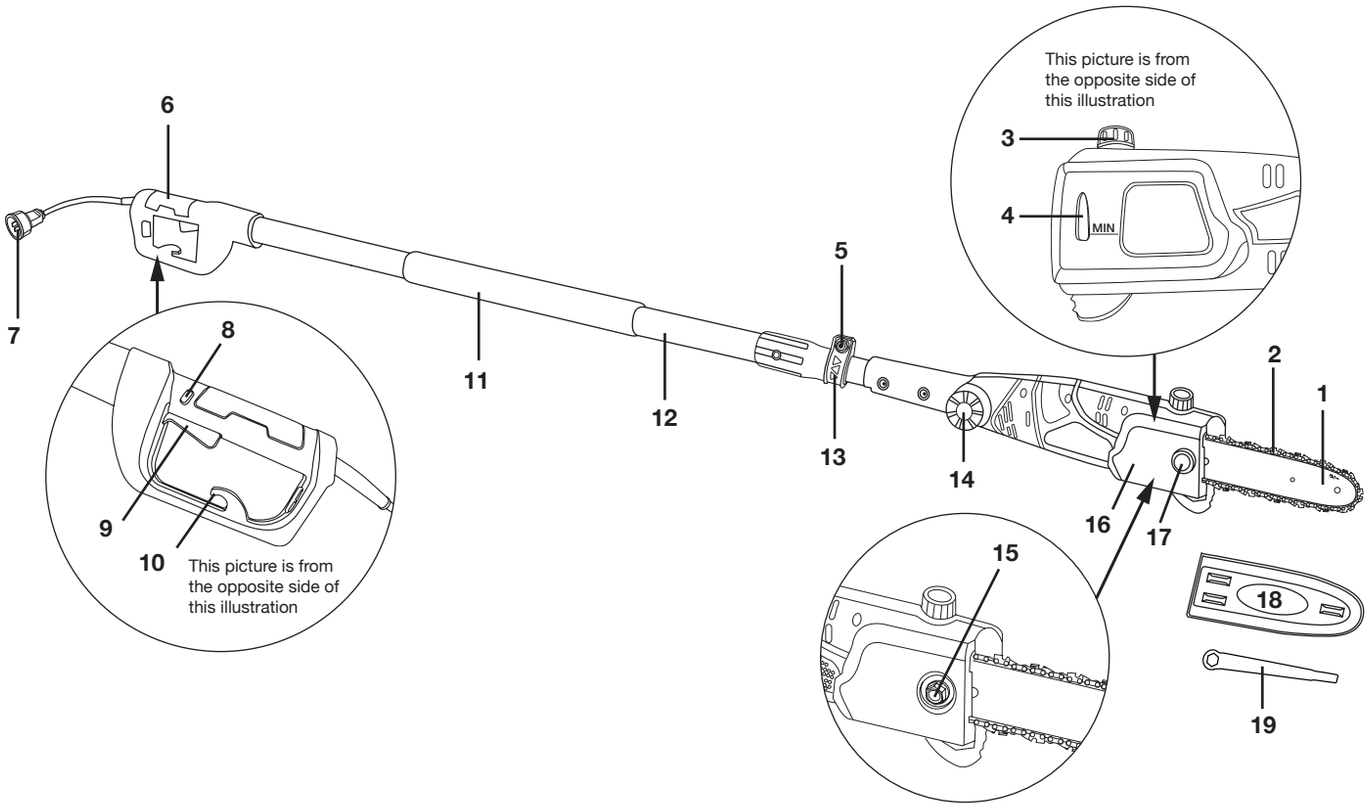

1. 8 in. Oregon guide bar
2. 8 in. Oregon chain
3. Oil tank cap
4. Oil level indicator window
5. Cam-lock nut
6. Rear handle
7. Appliance cord
8. Safety lock button
9. Trigger switch
10. Extension cord restraint hook
11. Front handle foam grip
12. Telescopic pole
13. Cam-lock
14. Multi-angle head adjustment dial
15. End cover nut
16. Chain/sprocket end cover
17. End cover nut cap (nut is beneath the cap)
18. Cutting bar sheath
19. Hex key wrench/blade screwdriver

Technical Data

Rated Voltage	120 V ~ 60 Hz	Mutil-Angle Head	0º to 30º
Power	6.5 A	Telescopic Shaft	5.9 ft to 9.4 ft (1.8 m to 2.86 m)
No Load Speed	5400±10% rpm	Overhead Reach	15 ft (4.6 m)
Bar/Chain Length	8 in. (20.3 cm)	Oil Tank Capacity	2 fl oz (60 ml)
Cutting Thickness (Max)	7.5 in. (19 cm)	Weight	7.9 lbs (3.6 kg)

Unpacking

Carton Contents

- Electric pole chain saw
- 8 in. (20.3 cm) Oregon chain
- 8 in. (20.3 cm) Oregon guide bar
- Dual-tipped hex key wrench/blade screwdriver
- Cutting bar sheath
- Manual

1. Carefully remove the pole chain saw and check to see that all of the above items are supplied.
2. Inspect the product carefully to make sure no breakage or damage occurred during shipping. If you find damaged or missing parts, DO NOT return the unit to the store. Please call the Snow Joe® + Sun Joe® customer service center at 1-866-SNOWJOE (1-866-766-9563).

   NOTE: Do not discard the shipping carton and packaging material until you are ready to use your new electric pole chain saw. The packaging is made of recyclable materials. Properly dispose of these materials in accordance with local regulations.

IMPORTANT! The equipment and packaging material are not toys. Do not let children play with plastic bags, foils, or small parts. These items can be swallowed and pose a suffocation risk!

Assembly

⚠**WARNING!** Always wear heavy-duty gloves when handling the bar and chain. Mount the bar and chain very carefully so as not to impair the safety and efficiency of the machine. If in doubt, contact an authorized Snow Joe® + Sun Joe® dealer or call the Snow Joe® + Sun Joe® customer service center at 1-866-SNOWJOE (1-866-766-9563).

⚠**WARNING!** Unpacking and assembly should be completed on a flat and stable surface, with adequate space for moving the machine and its packaging.

⚠**DANGER!** Never start the motor before installing the guide bar, chain, and chain cover. Without all these parts in place, the clutch can fly off or explode, exposing the user to potentially serious injuries.

⚠**WARNING!** To avoid serious personal injury, read and understand all safety instructions provided.

⚠**WARNING!** Before performing any maintenance, make sure the tool is unplugged from the power supply. Failure to heed this warning could result in serious personal injury.

Installing/Replacing the Guide Bar and Chain

Tools and supplies required:

- Dual-tipped hex key wrench/blade screwdriver (supplied)
- Heavy-duty work gloves

NOTE: When replacing the guide bar and chain, use only identical replacement parts. Make sure the pole chain saw is disconnected from the power supply before proceeding with installation.

1. Using the supplied flat-tip blade screwdriver, remove the end cover nut cap from the chain/sprocket end cover to expose the end cover nut (Figs. 1 & 2).

   TIP: When replacing the chain, slide on the cutting bar sheath temporarily for added protection.

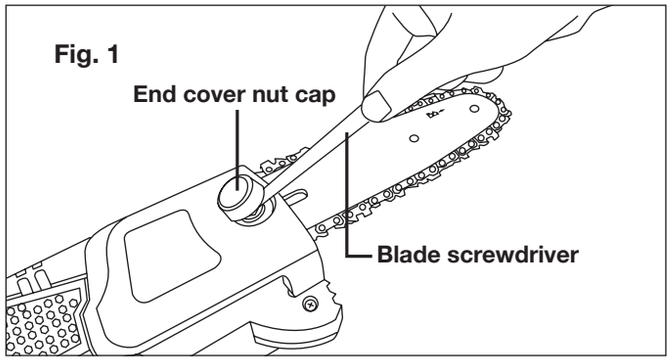

Fig. 1

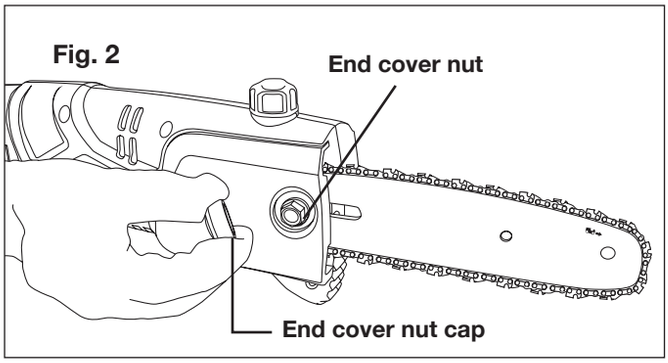

Fig. 2

2. Using the supplied hex key wrench, unscrew the end cover nut and remove the chain/sprocket end cover (Figs. 3 & 4).

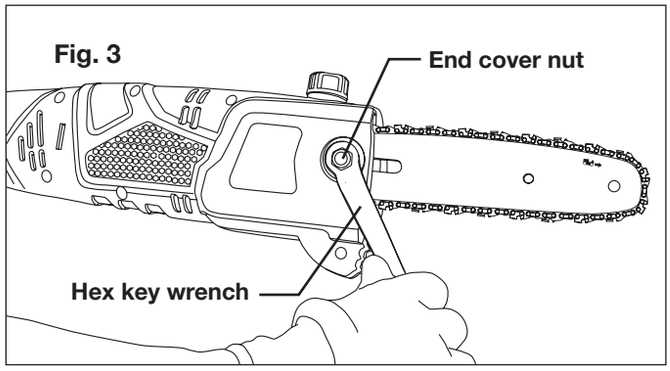

Fig. 3

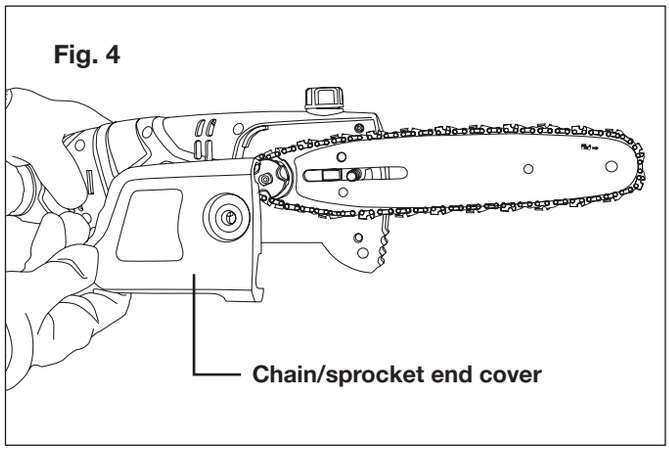

3. Remove the cutting bar and chain from the mounting surface (Fig. 5).

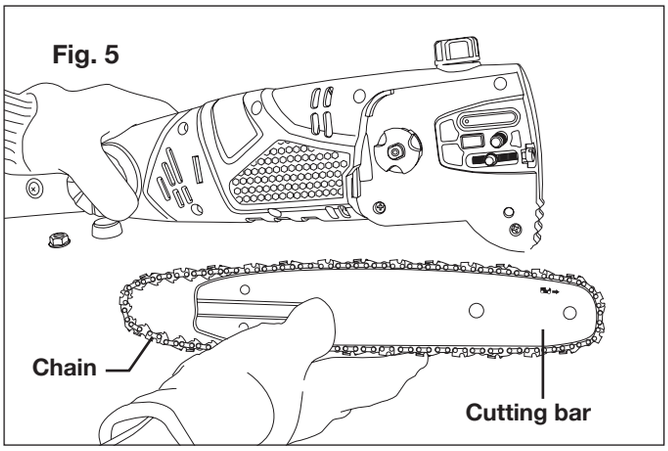

4. Remove the old chain from the bar.
5. Lay out the new saw chain in a loop and straighten any kinks. **THE SHARP SIDE OF THE TEETH MUST FACE AWAY FROM YOU IN THE DIRECTION OF THE CHAIN ROTATION INDICATED ON THE GUIDE BAR ➡**. If the teeth face backwards, turn the loop over (Fig. 6).

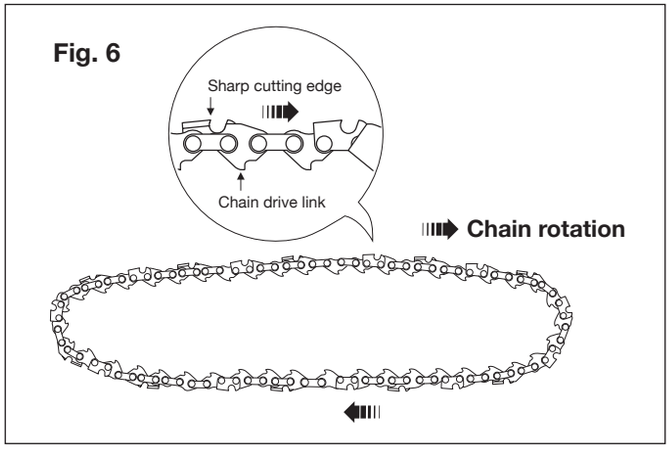

6. Starting at the tip, mount the chain drive links into the bar groove, leaving a loop at the back of the bar. The chain will loosely fit until it is placed on the sprocket. (Figs. 7 & 8)

   NOTE: Make certain of the direction of the chain ➡. If the chain is mounted backwards, the saw will vibrate abnormally and will not cut.

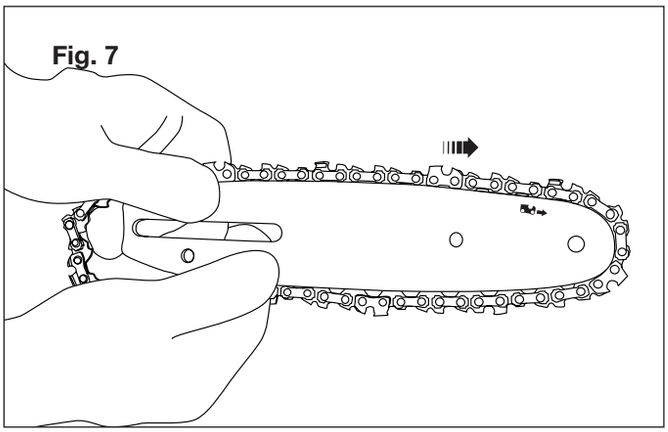

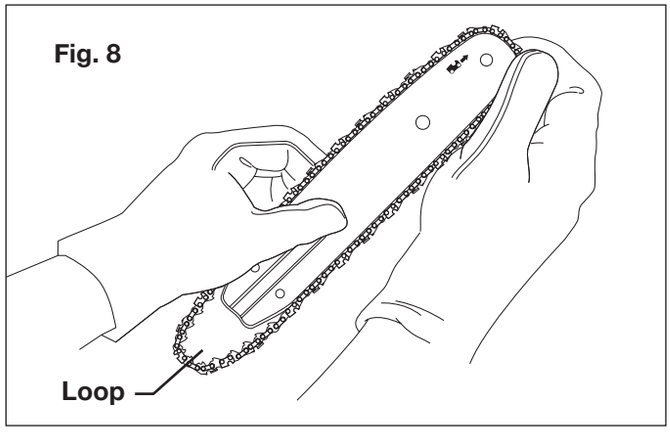

8. Hold the chain in position on the bar and place the loop around the sprocket. Fit the bar flush against the mounting surface so that the bar studs are in the long slot of the bar and the adjusting pin is in the chain tension pin hole (Fig. 9).

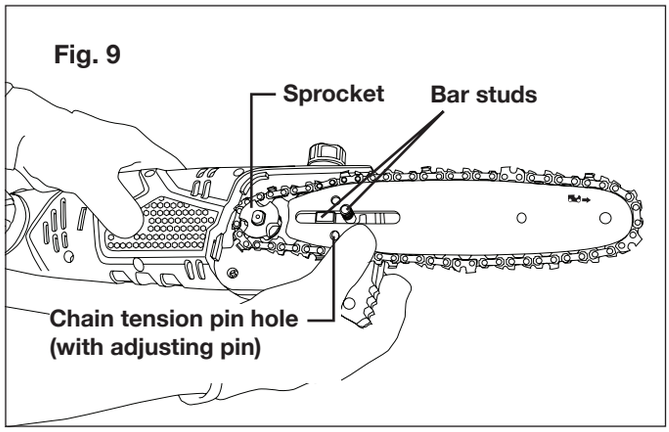

9. Adjust the chain tension as needed by adjusting the chain tensioner screw with the supplied flat-tip blade screwdriver. Make sure to align the chain tensioner screw with the pin hole (Fig. 10).

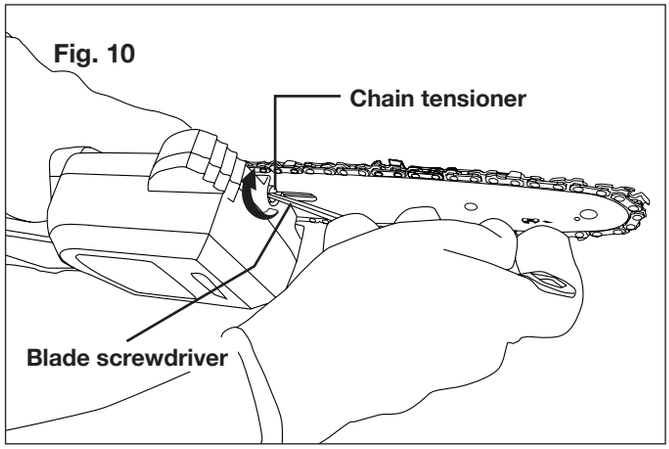

10. Replace the chain/sprocket end cover by inserting the rear tab first into the rear tab slot and position the cover onto the saw head. Tighten the end cover nut, but leave the bar free to move for tension adjustment (Fig. 11).

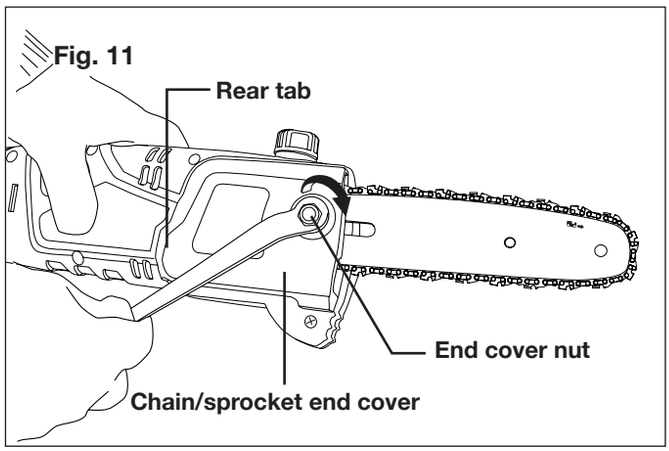

11. Remove all slack from the chain by turning the chain tensioner screw clockwise until the chain seats snugly against the bar with the drive links in the bar groove (Fig. 12).

NOTE: The chain is correctly tensioned when there is no sag on the underside of the guide bar; the chain is snug, but can be rotated by hand without binding. For more information on chain tensioning, see the maintenance section beginning on pg. 12.

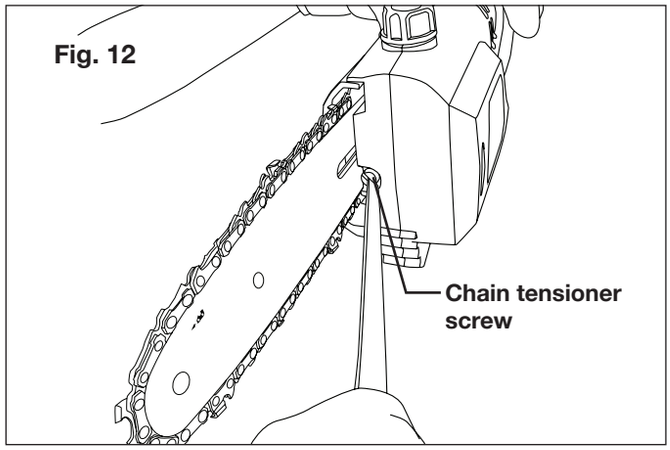

12. Tighten the end cover nut using the hex key wrench (Fig. 11), then replace the end cover nut cap to secure the chain/sprocket end cover (Fig. 13).

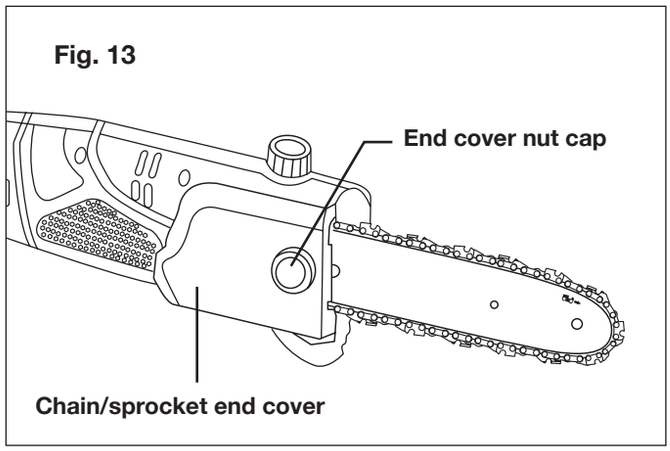

NOTE: If the chain is too tight, it will not rotate. Loosen the end cover nut slightly and turn the chain tensioner 1/4 turn counterclockwise. Lift the tip of the guide bar up and retighten the end cover nut. Ensure that the chain can be rotated by hand without binding.

NOTE: A new chain tends to stretch; check the chain tension frequently, and adjust tension as required.

Operation

Starting and Stopping

⚠CAUTION!

- Before starting the saw, remove the oil tank cap and add bar & chain oil to the top of the oil level window (Fig. 14). One minute of use will consume approximately 0.15 fl oz (5 ml) of oil. Refill when the oil level drops to 1/4 of a tank.

  NOTE: Your electric pole chain saw is equipped with an automatic oil pump for bar and chain oiling. You must add bar and chain oil or your pole chain saw will not function.

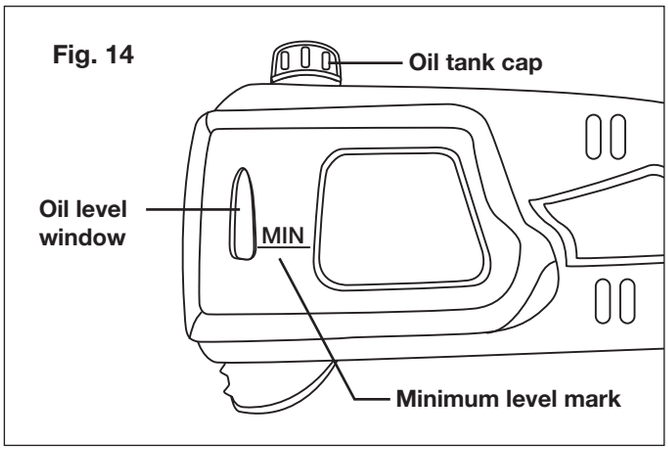

- Starting, stopping, and restarting an electric motor repeatedly within a few seconds can generate a great deal of heat and damage the motor. To protect the life of your electric pole chain saw, always wait at least five seconds after stopping before restarting the saw.

⚠**WARNING!** Be certain that the chain is not in contact with any object when you start the motor.

⚠**WARNING!** Keep hands away from chain. Keep hands on handles. Do not overreach.

A good, firm grip on the tool using both hands will help you maintain control. When using the pole chain saw, place one hand on the front handle foam grip and the other hand on the rear handle with your thumbs and fingers encircling the pole and handle. A firm grip combined with proper positioning of the handle against your body will help you maintain control of the saw. Do not let go of the pole chain saw while it is in operation.

⚠**WARNING!** Do not operate the pole chain saw in a tree, on a ladder, or on a scaffold. Using the tool under such circumstances is extremely dangerous.

⚠**CAUTION!** The chain will continue to run for several seconds after turning off the tool.

Do not use the pole chain saw under wet conditions. Use extreme caution when cutting small brush, saplings, or limbs under tension because slender and tense material may catch the saw and be whipped toward you, pull you off balance, or spring back.

Do not use the pole chain saw to cut vines and/or small underbrush.

⚠**WARNING!** Do not let familiarity with this type of tool prevent you from taking all necessary precautions. Remember that a careless fraction of a second is sufficient to inflict serious injury.

⚠**WARNING!** Do not cut trees near electrical wires.

⚠**WARNING!** Failure to lubricate the chain will cause damage to the bar and chain. Use only a good quality bar and chain oil designed specifically for use with chain saws. One minute of use will consume approximately 0.15 fl oz. (5 ml) of oil.

NOTE: It is normal for oil to seep from the saw when not in use. To prevent seepage, empty the oil tank after each use. When storing the unit for a long period of time (3 months or longer), be sure the chain is lightly lubricated; this will prevent rust on the chain and bar sprocket.

⚠**WARNING!** Be aware of the cord while operating the saw. Keep the cord away from the chain. Be careful not to trip over the extension cord.

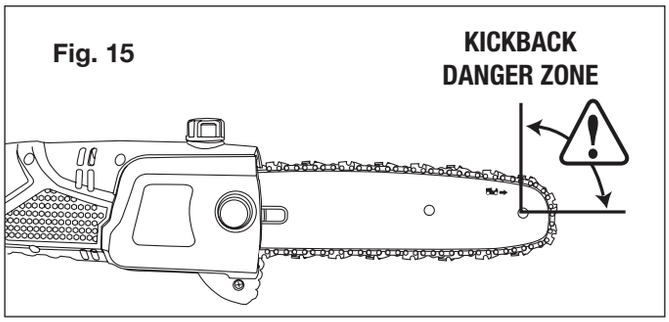

⚠**WARNING!** Kickback may occur when the moving chain contacts an object at the upper portion of the tip of the guide bar or when the wood closes in and pinches the chain saw in the cut (Fig. 15). Contact at the upper portion of the tip of the guide bar can cause the chain to dig into the object and stop the chain for an instant. The result is a lightning-fast reverse reaction, which kicks the guide bar up and back toward the operator. If the chain saw is pinched along the top of the guide bar, the guide bar can be driven rapidly back toward the operator. Either of these reactions can cause loss of saw control, which can throw the operator off balance and result in serious injury. Do not rely exclusively upon the safety devices built into the saw. As a user, you should take several precautions to keep your cutting jobs free from accident or injury.

1. Prior to each cutting session, run through the daily checklist (see pg. 15).
2. Connect the electric pole chain saw to a working 120 V outlet using a heavy-duty outdoor extension power cord, such as the Snow Joe® + Sun Joe® Power Joe SJTW-A 14-gauge 50-foot extension cord with lighted end (Model PJEXT50-B). Visit snowjoe.com to order online or call 1-866-SNOWJOE (1-866-766-9563) to order by phone.
3. Make a loop in the power cord and push it up through the hole in the handle and around the cord restraint hook (Fig. 16), then connect the extension cord to the appliance cord.

4. To turn the tool ON, push and hold the safety lock button (located on the rear handle) with your thumb and then squeeze the trigger with your fingers. Once the tool is running, you can release the safety lock button (Fig. 16).

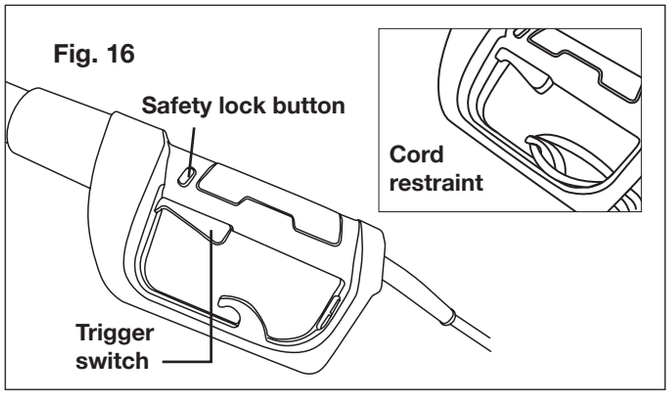

5. To turn the tool OFF, release the trigger switch (Fig. 16).

   NOTE: Do not press the trigger switch until you are ready to make a cut.

Adjusting the Telescoping Pole

1. Disconnect the saw from the power supply.
2. Unclip the cam-lock to release the pole (Fig. 17).

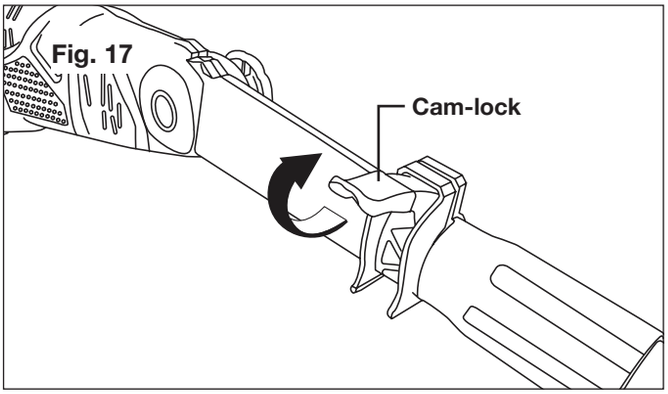

3. Extend the pole to the desired length (Fig. 18).

   NOTE: Push poles toward each other to shorten the pole or pull them away from each other to lengthen the pole. Only extend the pole to the minimum length required to reach the limb to be cut.

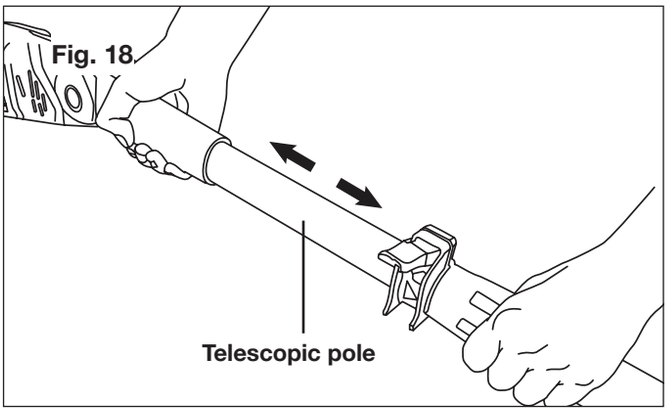

4. Lock the pole in position by closing the cam-lock (Fig. 19), and ensure that the pole is secure. If the pole telescopes when the cam-lock is closed, the nut may need tightening.

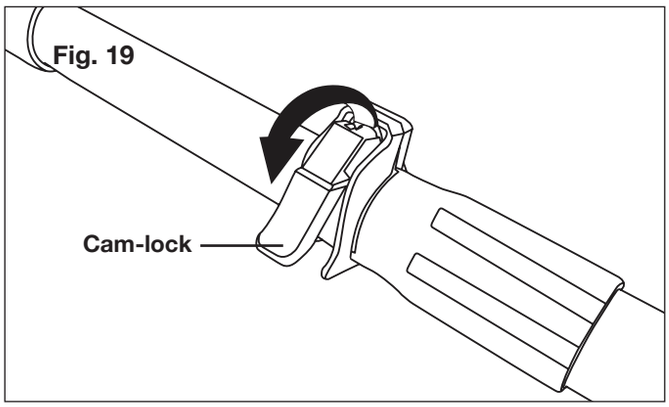

⚠**WARNING!** Failure to lock the telescopic pole cam-lock as directed could result in personal injury.

Tightening the Bolt

The retaining bolt may need tightening to secure the telescopic pole in place.

1. Unclip the cam-lock. Using the hex key wrench, tighten the cam-lock nut, then close the cam-lock. Ensure that the pole is secure. The wrench may be required to loosen the cam-lock nut if you need to adjust the pole to a different height (Fig. 20).

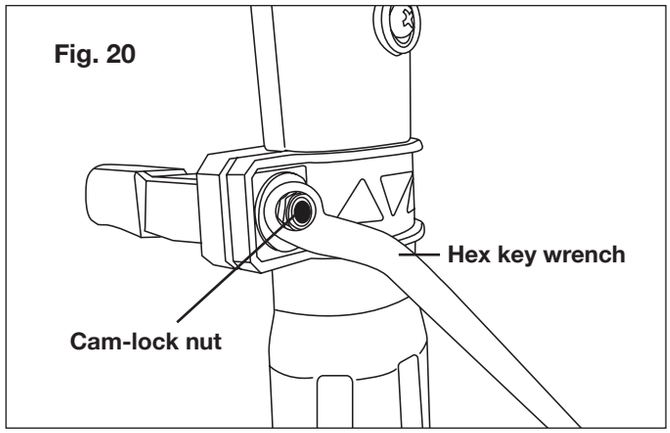

Adjusting the Multi-Angle Head

The pole chain saw head can be rotated for different cutting angles from 0º to 30º.

1. Disconnect the pole chain saw from the power supply.
2. Turn the multi-angle head adjustment dial counterclockwise to loosen the head (Fig. 21).

Fig. 21

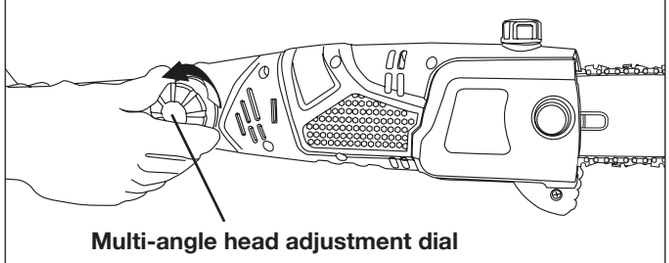

3. Adjust the head to the desired position (Fig. 22).

Fig. 22

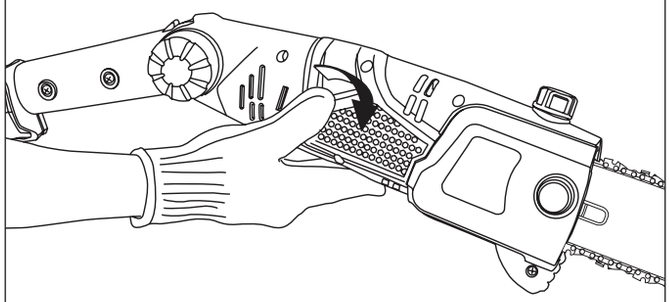

4. Turn the dial clockwise to tighten and secure the head in place (Fig. 23).

Fig. 23

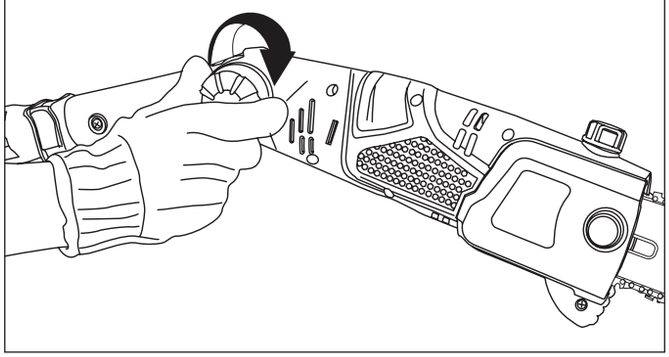

NOTE: Failure to properly secure the head adjustment dial may result in personal injury and/or property damage.

Cutting Tips

Proper Cutting Stance

- Balance your weight with both feet on solid ground.
- Your body should always be to the left of the chain line.
- The most typical cutting application is to position the unit at an angle of 60° or less depending on the specific situation (Fig. 24). As the angle of the pole chain saw shaft to the ground increases, the difficulty of making the first cut (from the underside of limb) increases.

Fig. 24

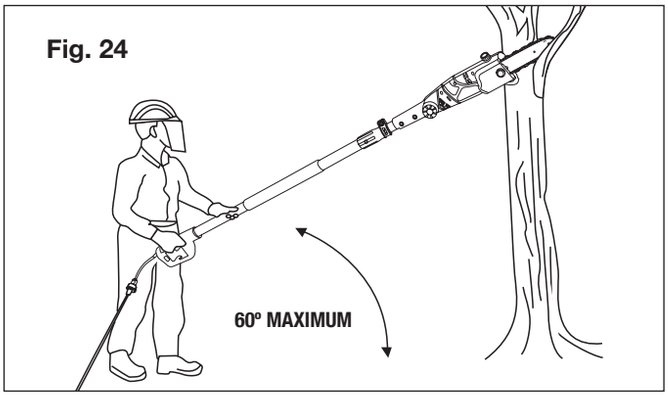

Basic Cutting Procedure

This unit is designed for trimming small branches and limbs up to 7.5 in. (19.1 cm) in diameter depending on the wood type. Practice cutting a few small limbs using the following technique to get the “feel” of using the saw before you begin a major sawing operation.

- Take the proper stance in front of the tree with the saw OFF (Fig. 24).
- Squeeze the trigger and let the chain accelerate to full speed before entering the cut.
- Keep the saw running the entire time you are cutting; maintain a steady speed.
- Allow the chain to cut for you; exert only light downward pressure. If you force the cut, damage to the bar, chain, or unit can result.
- **PUSH and PULL –** This reaction force is always opposite to the direction the chain is moving when it is in contact with the wood. Thus, the operator must be ready to control the **PULL** when cutting on the bottom edge of the bar, and **PUSH** when cutting along the top edge.
- Do not put pressure on the saw at the end of the cut.

Pruning

Pruning is the process of trimming limbs from a live tree.

- Remove long branches in several stages.
- Cut lower branches first to allow the top branches more room to fall.
- When pruning trees, it is important not to make the finishing cut next to the main limb or trunk until you have cut off the farthest lying limb. This will reduce the weight and prevent stripping the bark from the main member.
- Under cut the branch 1/3 through for your first cut. Your second cut should over cut to drop the branch off (Fig. 25). Be prepared to balance the weight of the pole chain saw when the limb falls.

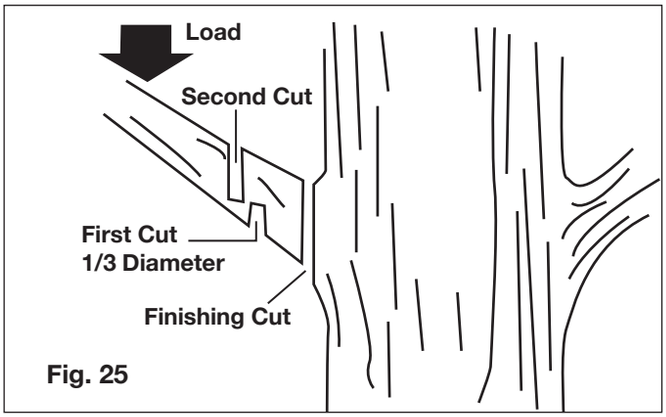

Fig. 25

- Now make your finishing cut from the topside of the branch smoothly and neatly against the main member so the bark will grow back to seal the wound.
- Release the trigger ON/OFF switch as soon as the cut is completed. Failure to follow proper cutting procedures will result in the bar and chain binding and becoming pinched or trapped in the limb.

Limbing

Limbing is the process of removing branches from a fallen tree.

- You should cut limbs one at a time. Remove the cut limbs from the work area often to help keep the work area clean and safe.
- Cut branches under tension from the bottom up to avoid binding the pole chain saw.
- Keep the tree between you and the pole chain saw while limbing. Cut from the side of the tree opposite the branch you are cutting.

If the Saw Becomes Pinched or Trapped

1. Wait for the blade to stop, wait five minutes for the saw to cool, unplug the power cord, and wear gloves to protect your hands from the chain teeth.
2. If you can reach the limb from the ground, lift the limb while holding the saw. This should release the “pinch” and free the saw.
3. If the saw is still trapped, call a professional for assistance.

Minimize Kickback

Kickback may occur when the moving chain contacts an object at the upper portion of the tip of the guide bar or when the wood closes in and pinches the pole chain saw in the cut. Contact at the upper portion of the tip of the guide bar can cause the chain to dig into the object and stop the chain for an instant. The result is a lightning-fast reverse reaction, which kicks the guide bar up and back toward the operator. If the pole chain saw is pinched along the top of the guide bar, the guide bar can be driven rapidly back toward the operator. Either of these reactions can cause loss of saw control, which can result in serious injury. Do not rely exclusively upon the safety devices built into the saw. As a pole chain saw user, you should take several steps to keep your cutting jobs free from accident or injury.

Take the following precautions to minimize kickback:

- Before you start the unit, make sure the pole chain saw is not contacting any object.
- Always grip the pole and handle firmly with both hands when the unit is running. Place one hand on the pole and your other hand on the molded handle with your thumbs and fingers encircling the pole and handle. A firm grip combined with proper positioning of the handle against your body will help you maintain control of the saw if kickback occurs.
- Make sure that the area in which you are cutting is free from obstructions.
- Do not let the kickback danger zone area of the guide bar contact a log, branch, fence, or any other obstruction that could be hit while you are operating the pole chain saw (Fig. 15).
- Always cut with the unit running at full speed. Fully squeeze the ON/OFF trigger and maintain a steady cutting speed.
- Wear non-slip gloves for maximum grip and protection.
- Extend the pole only to the length required to reach the limb cut. Do not extend the rear handle above waist height.

Maintenance

Please contact an authorized Snow Joe® + Sun Joe® dealer or call the Snow Joe® + Sun Joe® customer service center at 1-866-SNOWJOE (1-866-766-9563) for all maintenance operations not foreseen in this manual. Any operation performed in an unauthorized service center or by unqualified personnel will completely invalidate the warranty.

⚠**WARNING!** For your safety and that of others:

- Correct maintenance is essential to maintain the original efficiency and safety of the machine over time.
- Keep all nuts, bolts, and screws tight to be sure the equipment is in safe working condition.
- Never use the machine with worn or damaged parts. Damaged parts are to be replaced and never repaired.
- Only use original Snow Joe® + Sun Joe® replacement parts. Parts that are not of the same quality can seriously damage the equipment, compromise safety, and invalidate the warranty.

⚠**WARNING!** Always unplug the power cord before performing any adjustments, maintenance, or repairs to your pole chain saw.

- Use protective gloves when handling the bar and chain.
- Keep the bar encased in its sheath, except when working directly on the bar or the chain.
- Never dispose of oils or other polluting materials in unauthorized places.

Motor Cooling

To avoid overheating and damage to the motor, always keep the cooling air vents clean and free of sawdust and debris.

Chain Tension

Check the chain tension before using the saw when the chain is cold. The correct tension of a cold chain is when there is no slack on the underside of the guide bar; the chain is snug, but you can rotate it by hand without binding.

During normal saw operation, the temperature of the chain will increase. The drive links of a correctly tensioned warm chain will hang approximately 0.050 in. (1.25 mm) out of the bar groove (Fig. 26). Be aware that a chain tensioned while warm, may be too tight upon cooling. Check the “cold tension” before next use. The chain must be re-tensioned whenever the flats on the drive links hang out of the bar groove (Fig. 26).

Fig. 26

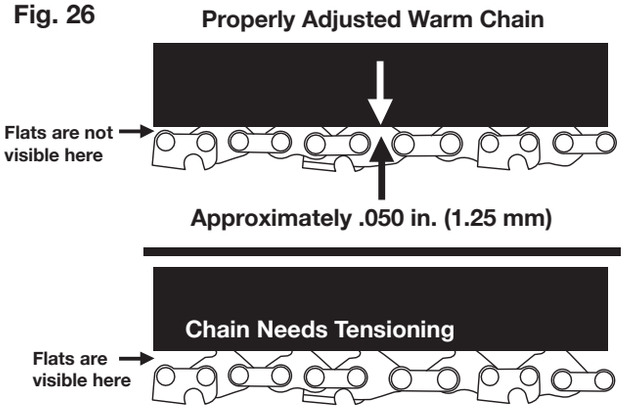

NOTE: A new chain tends to stretch. Check the chain tension frequently and re-tension as needed.

Nuts and Screws

Periodically check that all the nuts and screws are tightened securely. Check that the cam-lock that controls the telecoping pole is intact and in proper working order.

Chain Sharpening

⚠**WARNING!** To ensure that the chain saw works safely and efficiently, it is essential that the cutting components are well-sharpened. **It is highly recommended to replace the chain once it loses its ability to cut cleanly and safely.** It is possible, however, to sharpen the existing chain if the sharpening is carefully performed. Any work on the chain and bar requires specific experience and special tools. For safety purposes, we recommend you contact an authorized Snow Joe® + Sun Joe® dealer or call the Snow Joe® + Sun Joe® customer service center at 1-866-SNOWJOE (1-866-766-9563).

Sharpening is necessary when:

- the sawdust looks like dust;
- cutting becomes more difficult;
- the cut is not straight;
- vibrations increase.

An authorized service center will sharpen the chain using the right tools to ensure minimum removal of material and even sharpness on all the cutting edges.

If you sharpen the chain yourself, use special round-section files with the right diameter depending on the type of chain (see “Chain Maintenance Table” pg. 15). You need a certain amount of skill and experience to avoid damaging the cutting edges.

Sharpen the chain as follows (Fig. 27):

- Secure the bar firmly, with the chain mounted, in a suitable vice.
- Tighten the chain if it is loose.
- Mount the file in the guide and then insert it in the tooth at a constant angle from the cutting edge.
- Sharpen in a forward motion a few times and repeat this on all the cutting edges facing the same way (right or left).
- To move the chain forward, use a screwdriver.
- Turn the bar over in the vice and repeat on all the other cutting edges.
- Check that the depth limiter tooth does not stick out farther than the inspection tool and file any projecting parts with a flat file, rounding off the edges (Fig. 27).
- After sharpening, remove all traces of filing and dust and lubricate the chain in an oil bath. Replace the chain whenever:
  - the length of the cutting edges decreases to 5 mm or less;
  - there is too much play between the links and the rivets.

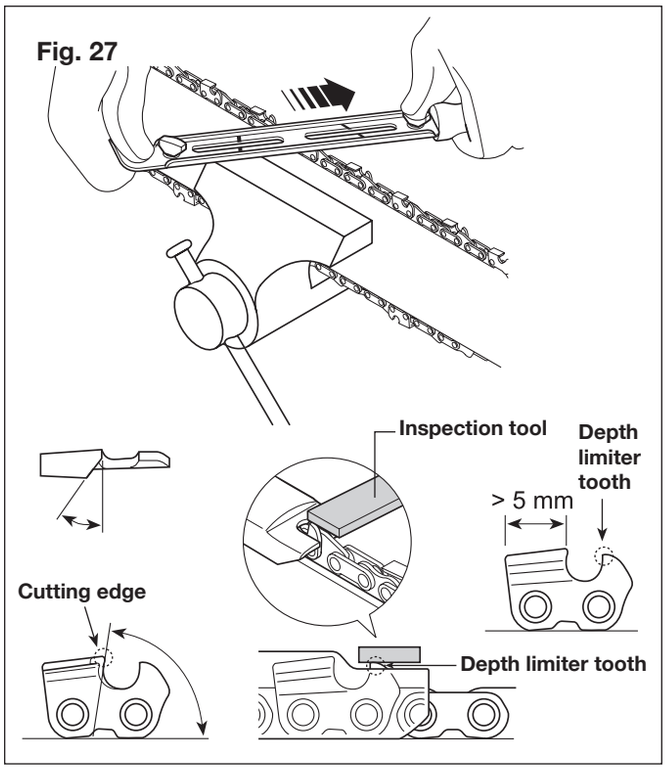

Guide Bar Maintenance

When the guide bar shows signs of wear, turn it over on the saw to distribute the wear for maximum bar life. Feathering or burring of the bar rails is a normal process of bar wear. You should smooth such faults with a file as soon as they occur.

Replace a bar with any of the following faults:

- wear inside the bar rails permitting the chain to lay over sideways
- bent guide bar
- cracked or broken rails
- spread rails

Turn the saw over, check the underside of the guide bar, and make sure that the lubrication holes and chain groove are free from impurities.

You can purchase replacement parts for your Sun Joe® Saw Joe SWJ802E/SWJ802E-GRY/SWJ802E-PRP electric pole chain saw by ordering online at snowjoe.com or, to order by phone, contact Snow Joe® + Sun Joe® customer service at 1-866-SNOWJOE (1-866-766-9563).

Chain Sprocket

Regularly check the condition of the sprocket and replace it when wear exceeds 0.5 mm (Fig. 28).

Do not mount a new chain with a worn sprocket or vice-versa.

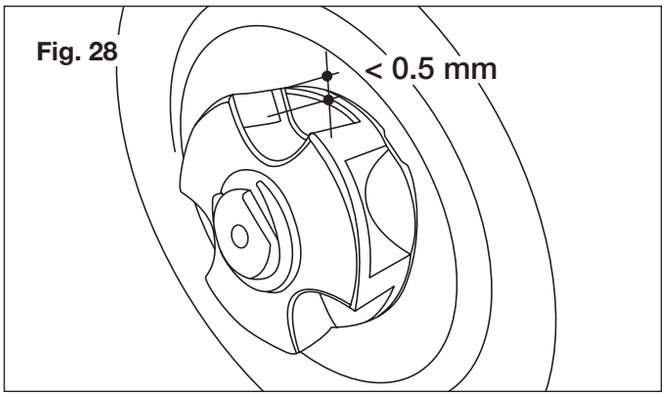

Troubleshooting

Troubleshooting Tips

Most difficulties are easy to fix. Consult the troubleshooting table for common problems and their solutions. If you continue to experience problems or need repairs beyond these minor adjustments, please call 1-866-SNOWJOE (1-866-766-9563) for assistance.

⚠**WARNING!** Always unplug the power cord before performing any adjustments, maintenance, or repairs to your pole chain saw.

Troubleshooting Table

Problems	Corrective Action
The saw motor fails to start	• Check that you installed the extension cord properly into the pole saw power cord receptacle and that you plugged the extension cord into a live 120 V outlet. • Make sure that you fully depress and hold the safety lock button before squeezing the ON/OFF trigger switch.
The saw runs, but the chain speed is low	• The chain is too tight; re-tension.
Bar and chain running hot and smoking	• The chain tension is too tight; re-tension. • The chain oil tank is empty; refill. • The lubrication holes are plugged; clean them out.
The saw motor runs, but the chain is not turning	• The chain tension is too tight; re-tension. • The guide bar or chain is damaged; inspect and replace the damaged part.

Chain Maintenance Table

Chain Pitch		Limiter Tooth Level (a)		File Diameter (d)	
		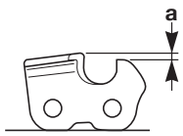		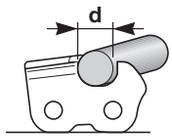	
inches	**mm**	**inches**	**mm**	**inches**	**mm**
3/8 Mini	9.32	0.018	0.45	5/32	4.0
0.325	8.25	0.026	0.65	3/16	4.8
3/8	9.35	0.026	0.65	13/64	5.2
0.404	10.26	0.031	0.80	7/32	5.6

Daily Checklist, Cleaning and Storage

Daily Checklist

To help maintain your electric pole chain saw for optimum performance, we recommend you complete this checklist prior to each work session.

⚠**WARNING!** Do not plug in the power cord until you have completed all of the daily checks.

- Inspect for any visible damage to the chain, guide bar, or motor housing.
- Inspect the oil port and guide bar rails and clean them to remove any debris.
- Check the chain tension.
- Check the chain teeth for sharpness.
- Check the bar and chain oil level; fill with only new chain oil specifically formulated for chain saws.

NOISES: If you notice anything unusual, such as a vibration or odd sound, shut the saw OFF immediately. Remove the power cord and check the saw for any damage.

If you cannot find the cause of the problem or are uncertain what to do, then have the saw inspected by an authorized Snow Joe® + Sun Joe® dealer or call the Snow Joe® + Sun Joe® customer service center at 1-866-SNOWJOE (1-866-766-9563) before using it.

⚠**CAUTION!**

- Remove the power cord and wait at least five minutes for the saw to cool before servicing or storing your unit.
- If you drop the saw, carefully inspect it for damage. If the guide bar is bent, the housing is cracked, the handle is broken, or if you see any other condition that may affect the saw's operation, **DO NOT USE** the tool. Instead, have it serviced at an authorized Snow Joe® + Sun Joe® dealer or call the Snow Joe® + Sun Joe® customer service center at 1-866-SNOWJOE (1-866-766-9563).

Cleaning

Use only mild soap and a damp cloth to clean the pole chain saw. Never let any liquid get inside the motor housing and **NEVER** immerse any part of the saw housing in liquid.

Storage

- Ensure that the guide bar cover is in place when storing.
- Do not store the pole chain saw near chemicals, such as fertilizers or other harsh solvents. Do not expose the plastic parts of the unit to brake fluids, gasoline, petroleum-based products, penetrating oils, or the like. These products are often highly corrosive and may cause permanent damage, weaken, or destroy the plastic parts of your pole chain saw.
- When not in use, your electric pole chain saw should be stored indoors in a dry and high or locked-up place, out of the reach of children.

Support

If your Sun Joe® Saw Joe SWJ802E/SWJ802E-GRY/ SWJ802E-PRP electric pole chain saw requires service or maintenance, please call 1-866-SNOWJOE (1-866-766-9563) for assistance.

Model and Serial Numbers

When contacting the company, reordering parts, or arranging service from an authorized dealer, you will need to provide the model and serial numbers, which can be found on the decal located on the housing of the unit. Copy these numbers into the space provided below.

Record the following numbers from the housing or handle of your new product:

Model #:

S W J 8 0 2 E - _ _ _

Serial #:

_ _ _ _ _ _ _ _ _ _ _ _ _ _ _ _ _ _

Accessories

⚠**WARNING!** ALWAYS use only authorized Snow Joe® + Sun Joe® replacement parts and accessories. NEVER use replacement parts or accessories that are not intended for use with this saw. Contact Snow Joe® + Sun Joe® if you are unsure whether it is safe to use a particular replacement part or accessory with your saw. The use of any other attachment or accessory can be dangerous and could cause injury or mechanical damage.

Accessories	Item	Model
1	Hex key wrench/blade screwdriver	SWJ802E-TOOL
2	8-inch (20.3 cm) Oregon guide bar	SWJ800E-62
3	8-inch (20.3 cm) Oregon chain	SWJ800E-63
4 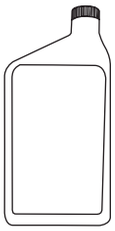	Bar and chain oil	SWJ-OIL sold at snowjoe.com or you can purchase equivalent bar and chain oil sold at your local hardware store
5 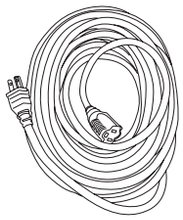	Snow Joe® + Sun Joe® Power Joe SJTW-A 14-gauge 50-foot extension cord with lighted end	PJEXT50-B

NOTE: Accessories are subject to change without any obligation on the part of Snow Joe® + Sun Joe®. Accessories can be ordered online at snowjoe.com or via phone by contacting the Snow Joe® + Sun Joe® customer service center at 1-866-SNOWJOE (1-866-766-9563).

NOTES

SNOW JOE® + SUN JOE® CUSTOMER PROMISE

ABOVE ALL ELSE, Snow Joe® + Sun Joe® are dedicated to you, our customer. We strive to make your experience as pleasant as possible. Unfortunately, there are times when a product does not work or breaks under normal operating conditions. We think it's important that you know what you can expect from us. That's why we created the Snow Joe® + Sun Joe® promise.

OUR PROMISE: Snow Joe® + Sun Joe® warrant new products for two years from the date of purchase. If your product does not work, or there's an issue with a specific part, we will fix this by either sending you a free replacement part or by sending you a new or comparable product at no charge. How cool is that! Before you know it, you'll be back in action cutting, sawing, mowing, washing and…?

GENERAL CONDITIONS:

Snow Joe® + Sun Joe® operating under Snow Joe®, LLC warrants this new product to the original purchaser for two years against defects in material or workmanship when used for normal residential purposes. If a replacement part or product is needed, it will be sent free of charge to the original purchaser except as noted below.

The duration of this warranty applies only if the product is put to personal use around the household. If the product is put to any business, commercial or industrial use or is rented or leased, then the duration of this warranty is 90 days from the date of original purchase. It is the owner's responsibility to correctly perform all maintenance and minor adjustments explained in the owner's manual.

HOW TO OBTAIN YOUR REPLACEMENT PART OR PRODUCT:

To obtain a replacement part or product, please visit snowjoe.com/help or email us at help@snowjoe.com for instructions. Please be sure to register your unit beforehand to speed up this process. Certain products may require a serial number, typically found on the decal affixed to the housing or guard of your product. All products require a valid proof of purchase.

EXCLUSIONS:

- Wearing parts like belts, augers, chains and tines are not covered under this warranty. Wearing parts can be purchased at snowjoe.com or by calling 1-866-SNOWJOE (1-866-766-9563).
- Batteries are covered in full for 90-days from the date of purchase.

Snow Joe® + Sun Joe® may from time to time change the design of its products. Nothing contained in this warranty shall be construed as obligating Snow Joe® + Sun Joe® to incorporate such design changes into previously manufactured products, nor shall such changes be construed as an admission that previous designs were defective.

This warranty is intended to cover product defects only. Snow Joe®, LLC is not liable for indirect, incidental or consequential damages in connection with the use or misuse of the Snow Joe® + Sun Joe® products covered by this warranty. This warranty does not cover any cost or expense incurred by the purchaser in providing substitute equipment or service during reasonable periods of malfunction or non-use of this product while waiting for a replacement part or unit under this warranty. Some states do not allow exclusions of incidental or consequential damages so the above exclusions may not apply in all states. This warranty may give you specific legal rights in your state.

HOW TO REACH US:

We're here to help Monday through Friday from 9AM to 6PM EST. You can reach us at 1-866-SNOWJOE (1-866-766-9563), online at snowjoe.com, via email at help@snowjoe.com or tweet us @snowjoe.

EXPORTS:

Customers who have purchased Snow Joe® + Sun Joe® products exported from the United States and Canada should contact their Snow Joe® + Sun Joe® distributor (dealer) to obtain information applicable to your country, province or state. If for any reason, you are not satisfied with the distributor's service, or if you have difficulty obtaining warranty information, contact your Snow Joe® + Sun Joe® seller. If in the event your efforts are unsatisfactory, please reach out to us directly.

snowjoe.com