INSTALLATION INSTRUCTIONS

ZEAFiVE®

Pedestal Bathroom Sink

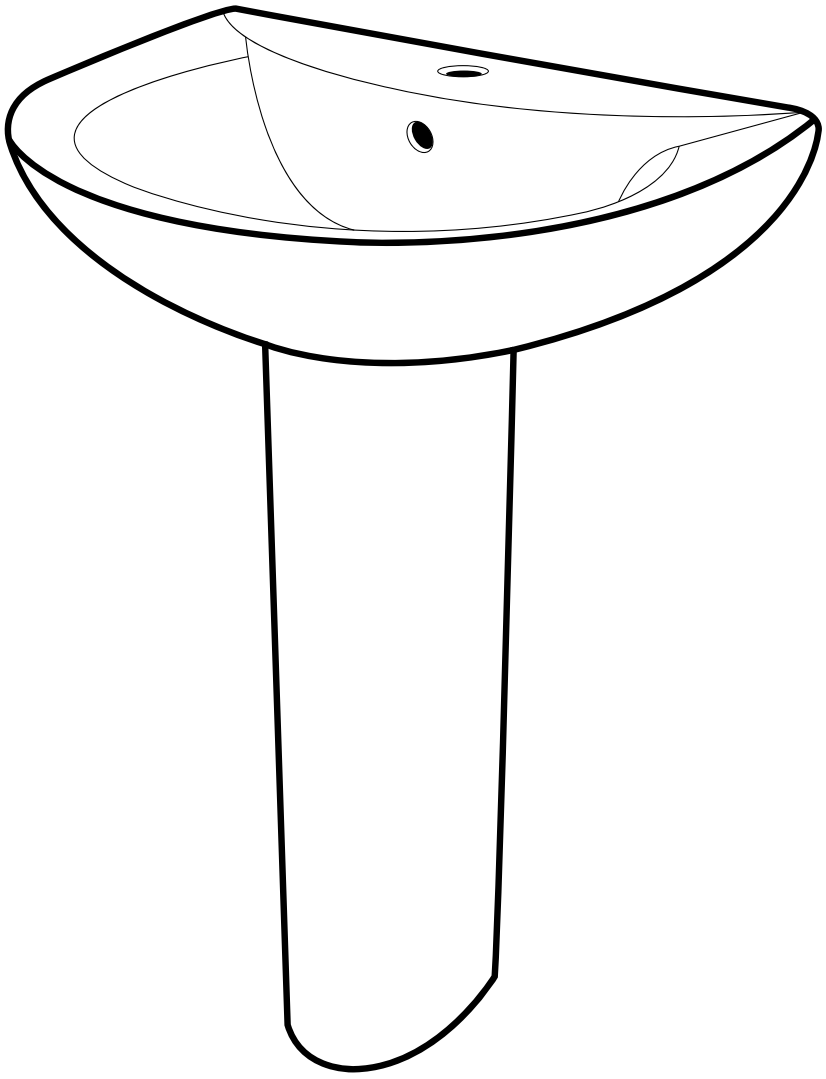

(+1) 626-679-3588 | service@bestgosupplychaininc.com



Prior to Installation:

- **Before installation, please make sure that the water source is closed and the water supply pipeline is reserved.**
- **Please confirm that the installation wall is a load-bearing wall. After completing the installation of heavy objects above 150 kgf, the wall can withstand this tensile force, and make sure that the wall is flat after installation.**
- **Please make sure that a qualified professional fallows the steps in this manual to install the pedestal.**

General Recommendations:

Please read installation and maintenance instructions thoroughly before installing the pedestal bathroom sink.
Be sure to use proper tools and always wear proper personal safety accessories for your protection.

If you have any questions or concerns please contact us:

(+1) 626-679-3588
service@bestgosupplychaininc.com

1. SUGGESTED TOOLS AND MATERIALS

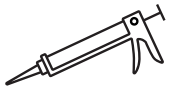

Silicone



Safety Glasses



Pencil



Tape Measure



Screwdriver Philips

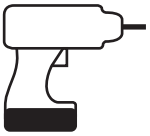

Drill



Adjustable Wrench

● Installation tools are not provided, please prepare by yourself.

2. PART LIST

Basin, pedestal, bolts kit, installation instruction.

3. USE AND MAINTENANCE

Cleaning	Neutral cleaner should be used to clean the product. It will damage the surface of the product if use a strong or corrosive cleaner. 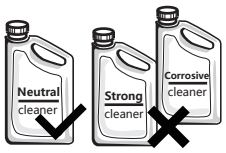	**Use**	Do not use nylon brush or cloth to clean products, so as not to abrade the surface of the product. Please clean the washbasin with a soft cloth, after each use. 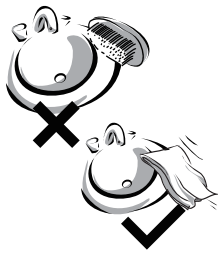
Warning	In the case of low ambient temperature, if pour high-temperature hot water directly into the basin for use, the basin may crack. Avoid hard objects directly hitting the surface of the product to prevent product damage. 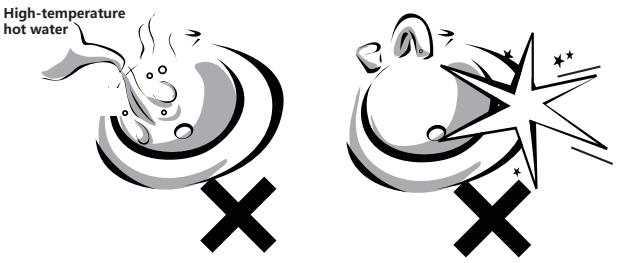		

(+1) 626-679-3588
service@bestgosupplychaininc.com

4. INSTALLATION STEPS

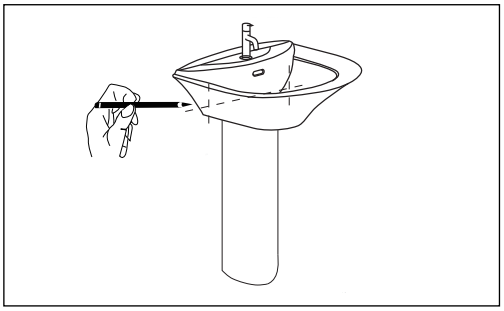

- **STEP 1:**
  Place the basin column at the position where it needs to be installed and then mark the position of the basin's installation hole.

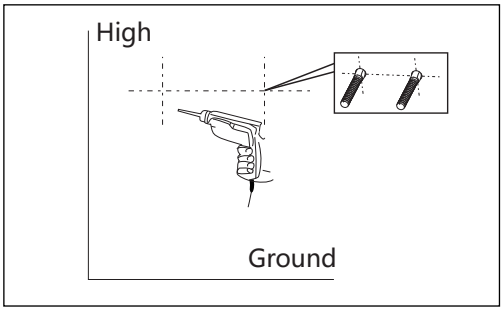

- **STEP 2:**
  Use a drill to make a hole at the mark on the wall, and then fix the expansion bolt in the installation hole. Install the end of the bolt for the installation basin to the corresponding expansion bolt.

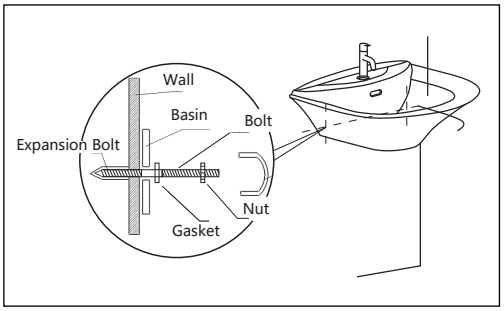

- **STEP 3:**
  After installing the faucet, fix the basin to the bolts which are already installed on the wall.

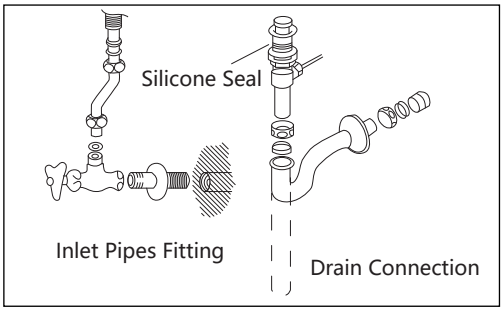

- **STEP 4:**
  Install the drain fittings according to the corresponding instructions, and connect the inlet and drain pipe fittings. Seal the bottom of the drainage with silicone.

  Attention: The faucet and the water inlet and drain pipes fittings must be firm, otherwise there may be leakage. After installation, please be sure to confirm whether there are any defects such as water leakage.

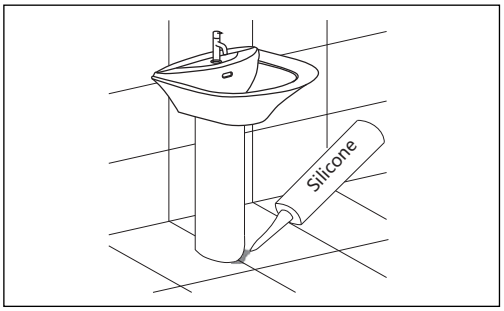

- **STEP 5:**
  After installing the basin, place the column to the corresponding position.
  Coat the contact surface between the basin and the wall and between the column and the ground with adhesive sealing materials such as silicone.

  Attention: It is absolutely forbidden to use epoxy resin glue and other sealing materials that increase in volume after hardening.

(+1) 626-679-3588
service@getproecommerce.com

ZEAFiVE®

ONE YEAR LIMITED WARRANTY

Phone: (+1) 626-679-3588
Email: service@bestgosupplychaininc.com

LIMITED WARRANTY COVERAGE

1 YEAR LIMITED WARRANTY

Zeafive products are made with quality materials and excellent craftsmanship to provide the customers a long-lasting product. In the case of any defects in materials or craftsmanship under regular use were inspected in the first one year of delivery, Zeafive will provide replacement parts at no charge, or at its option, replace any product or part of the product that is deemed defective, under normal installation, use, service and maintenance. This warranty applies only to the original purchaser. Proof of purchase will be required in the case of a claim. SCRATCHES ARE NOT COVERED UNDER WARRANTY.

The manufacturer warrants this product to be free of manufacture defects during the above mentioned warranty time. Please keep a copy of the original invoice as proof of purchase.

Zeafive will, as its option, (1) repair or replace the defective part(s) or product(s) at no charge; (2) issue a refund of the original purchase price of the product(s) (Valid within 30 days from the date of delivery); or (3) issue a credit to be applied toward the purchase of a new Zeafive product shipping/delivery charges may apply and are in Zeafive sole discretion.

Zeafive recommends the installations to be made by a licensed, professional plumber. Zeafive will not be held responsible for any damage or product failure due to improper installation, misuse, or failure to use a licensed professional. Zeafive is not responsible for any removal or installation cost.

This limited warranty shall not apply to goods which have been subject to accident, negligence, improper installation, product abuse, product misuse, or use of cleaners containing abrasives, alcohol or other organic solvents, whether performed by a contractor, service company, or yourself, are excluded from this warranty.

Zeafive responsibility under this limited warranty is limited to only to replacement parts and no other costs. Zeafive will not be responsible for labor charges and/or damage incurred by installation, repair or replacement, nor for any indirect incidental or consequential damages, losses, injury or costs of any nature relating to this product Except as provided by law, this limited warranty is in lieu of and excludes all other warranties, conditions, and guarantees, whether
expressed or implied, statutory or otherwise, including without restriction those merchantability of fitness for use.

RESPONSIBILITIES OF OTHERS

Inspecting the unit prior to installation is the responsibility of the installer or building contractor who acts on behalf of the user. They are responsible for ensuring the unit is free of defect or damage.

Notices are placed on and in the unit and on the shipping carton advising the installer of this responsibility.

In the event of a problem, the unit must not be installed. Zeafive is not responsible for failures or damage that could have been discovered, repaired, or avoided by proper inspection and testing prior to installation.

Damage occurring in transit is the responsibility of the carrier. The user or installer MUST open the crate and inspect the unit for damage when it is delivered. If damage is discovered, it must be reported immediately to the seller and the carrier in writing, and an inspection requested. Failure of the carrier to respond should be reported to the seller and the carrier. Your freight claims should be filed promptly thereafter.

LIMITATIONS AND EXCLUSIONS

This warranty does not cover instances of negligence, misuse, abuse, improper installation, carelessness, accident, hard water ormineral deposits, exposure to corrosive materials, misapplication, damages caused by improper maintenance, alteration of theproduct, or failure to follow care or installation instructions enclosed with your product.This warranty is void if the Zeafive is subject to alteration, or if repairs are attempted by anyone other than an authorized agent of Zeafive. This warranty does not extend to plumbing or components installed by dealers, installers or by any party other Zeafive.

Zeafive will not be liable for loss of use of the Zeafive inconvenience, or any other incidental or consequential costs, expense or damages. Please note that some states do not allow the exclusion or limitation of incidental damages.

DISCLAIMER

Except as expressly provided, there shall be no warranty or obligation, express or implied, oral or statutory. No dealer or other person has the authority to make any warranties or representations concerning Zeafive or its products. In no event shall Zeafive be held responsible for any such warranties or representations.

WARRANTY SERVICE

NOTE: When requesting warranty, be sure to have the following:

- Copy of original invoice
- Date of installation
- Description and pictures of defect
- Model number or description of model

To obtain warranty service and replacement part, please contact Zeafive Customer Service. Zeafive will determine whether to repair or replace your product, issue a refund, or issue a credit.