KLAIR LIVING

Assembly Instructions

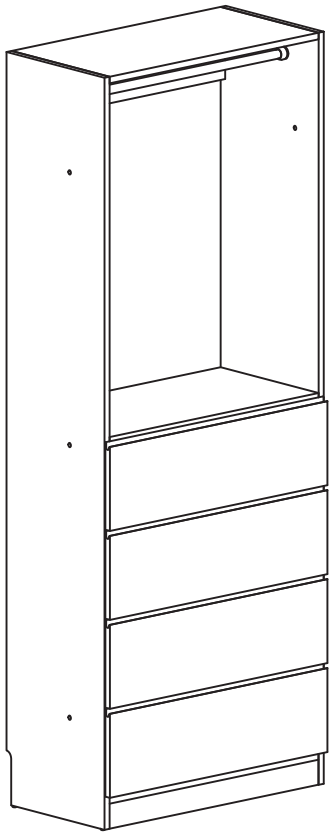

PROSPER CLOSET

PROSPER - D

x 1

60 minutes
2 Persons Assembly

Additional tools required:
Cross point screwdriver

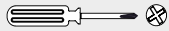

PROS.15092023

IMPORTANT! READ CAREFULLY AND RETAIN FOR FUTURE REFERENCE

Due to small parts keep children clear during assembly.

Carefully layout all the parts on a clean, flat surface and compare with the parts checklist. Please retain all packaging until you are sure no parts are missing, then once you are satisfied with the product please dispose of all packaging responsibly.

Ensure all fittings are fully tightened before use and checked regularly and re-tightened as necessary.

During assembly take care not to overtighten the bolts.

When positioning your furniture ensure the ground is firm, level and dry.

Do not position your furniture in direct sunlight or close to a source of heat.

Take care when handling or moving furniture, always lift with assistance to avoid damaging your product.

⚠ WARNING!

Serious or fatal crushing injuries can occur from furniture tipping over. To help prevent this please observe the following:

Do not let children climb or hang on the drawers, doors or shelves.

Place heaviest items in the lower drawers or shelves.

Do not place heavy objects on top of this product unless it has been specifically designed to support them.

Never open more than one drawer at a time.

If you require any additional information or help on assembly, please contact **sales@garagetechusa.com**

PROSPER CLOSET

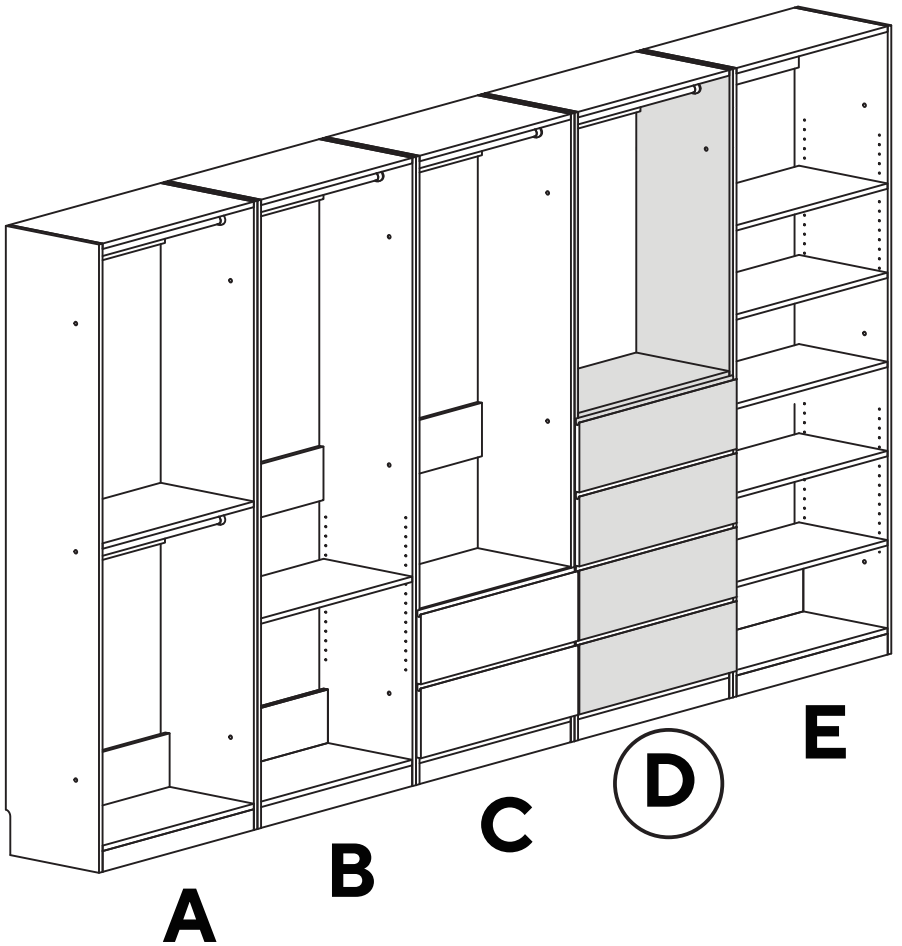

Fixings List

a - 44pcs  Housing 15T	b - 44pcs 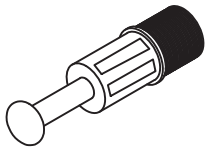 Spreading bolt	c1 - 2pcs  Hanger bracket
c2 - 2pcs  Hanger bracket	c3 - 1pc 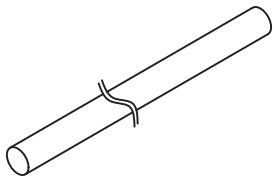 Hanger	d - 4pcs 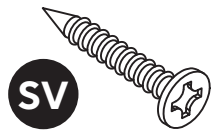 Screw M3 x 16
e - 16pcs 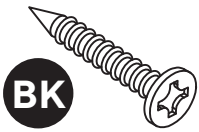 Screw M3.5 x 25	f - 16pcs 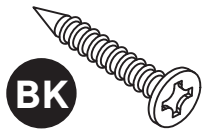 Screw M2.7 x 16	g - 16cs 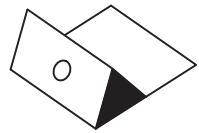 Plastic support
h - 3pcs 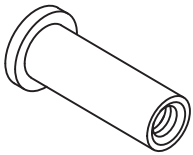 Grip M6 x 25	j - 3pcs  Bolt M6 x 20	

Parts List

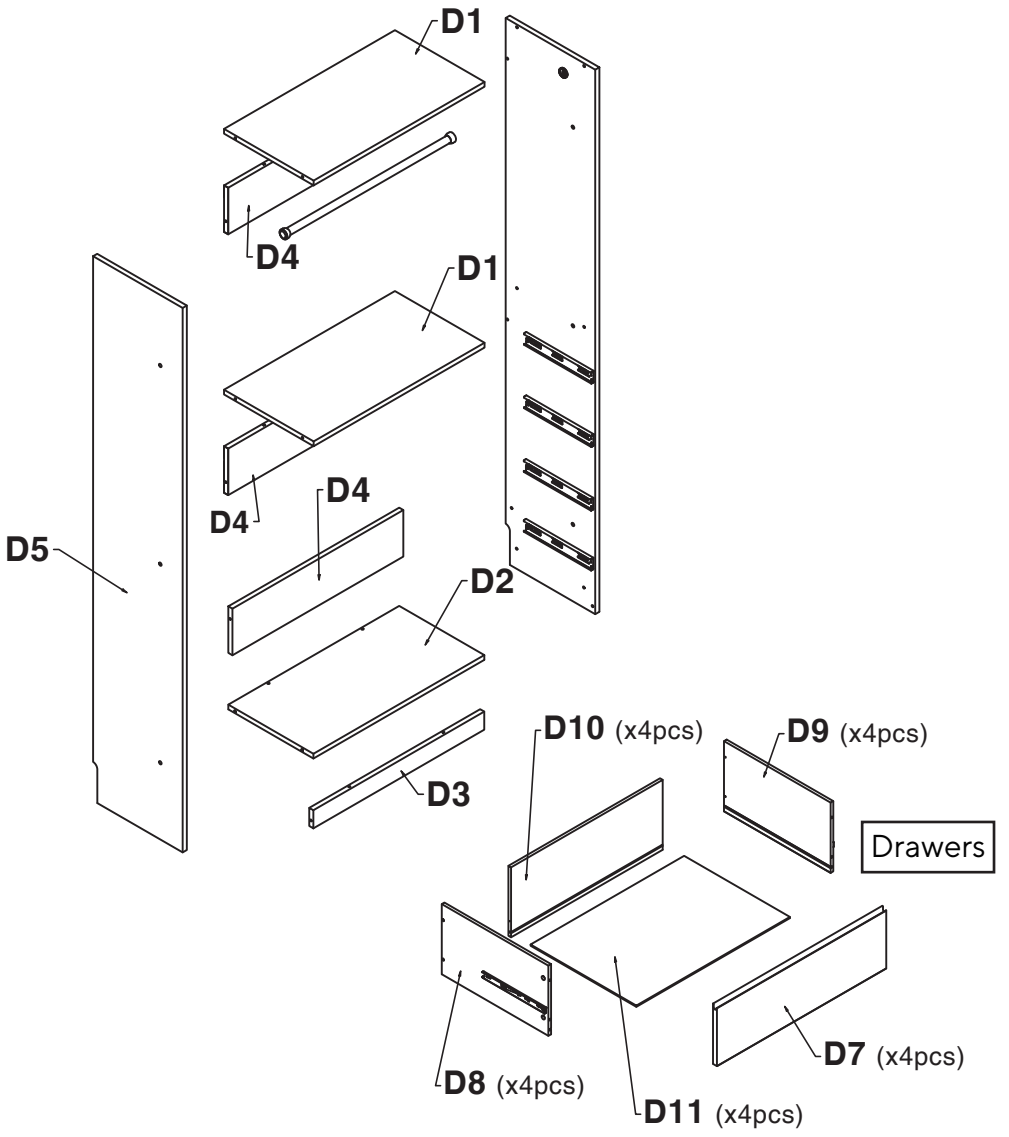
D1
D4
D1
D4
D4
D5
D2
D3
D10 (x4pcs)
D9 (x4pcs)
Drawers
D8 (x4pcs)
D11 (x4pcs)
D7 (x4pcs)

Step - 1

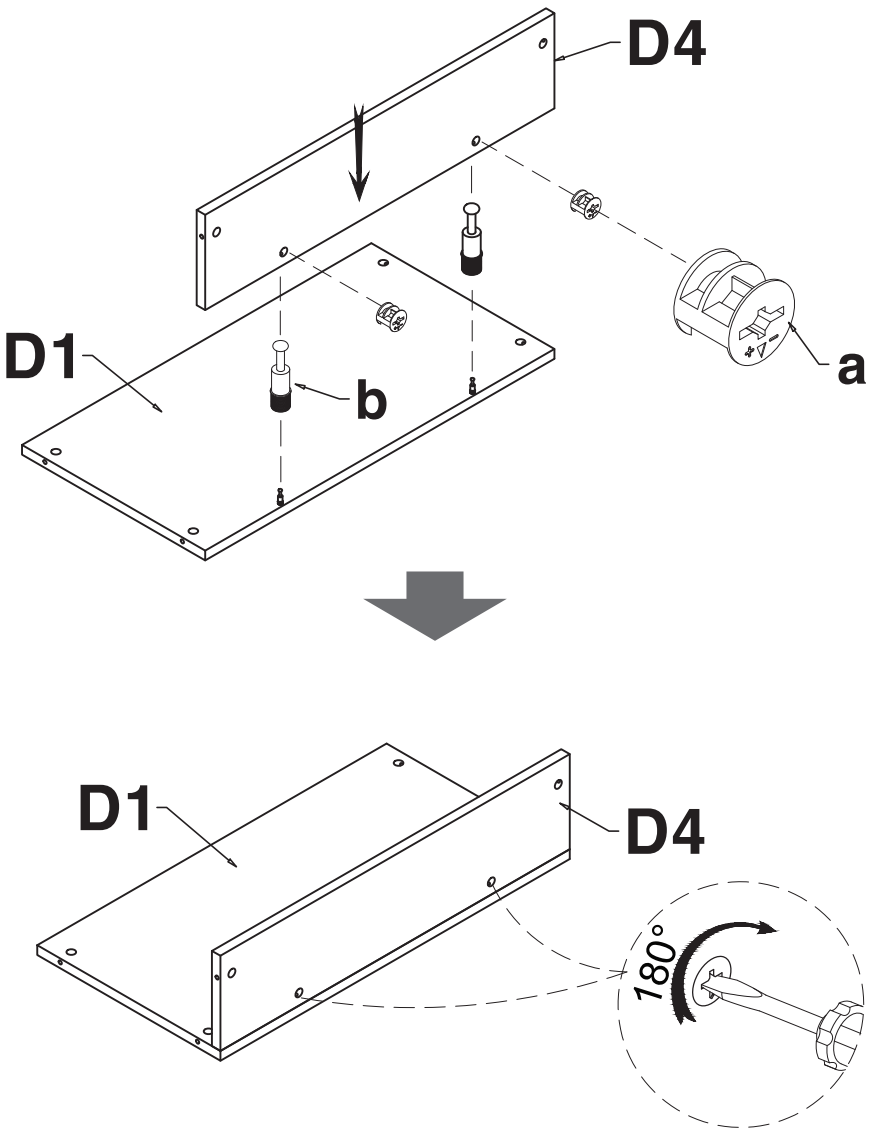

Step - 1

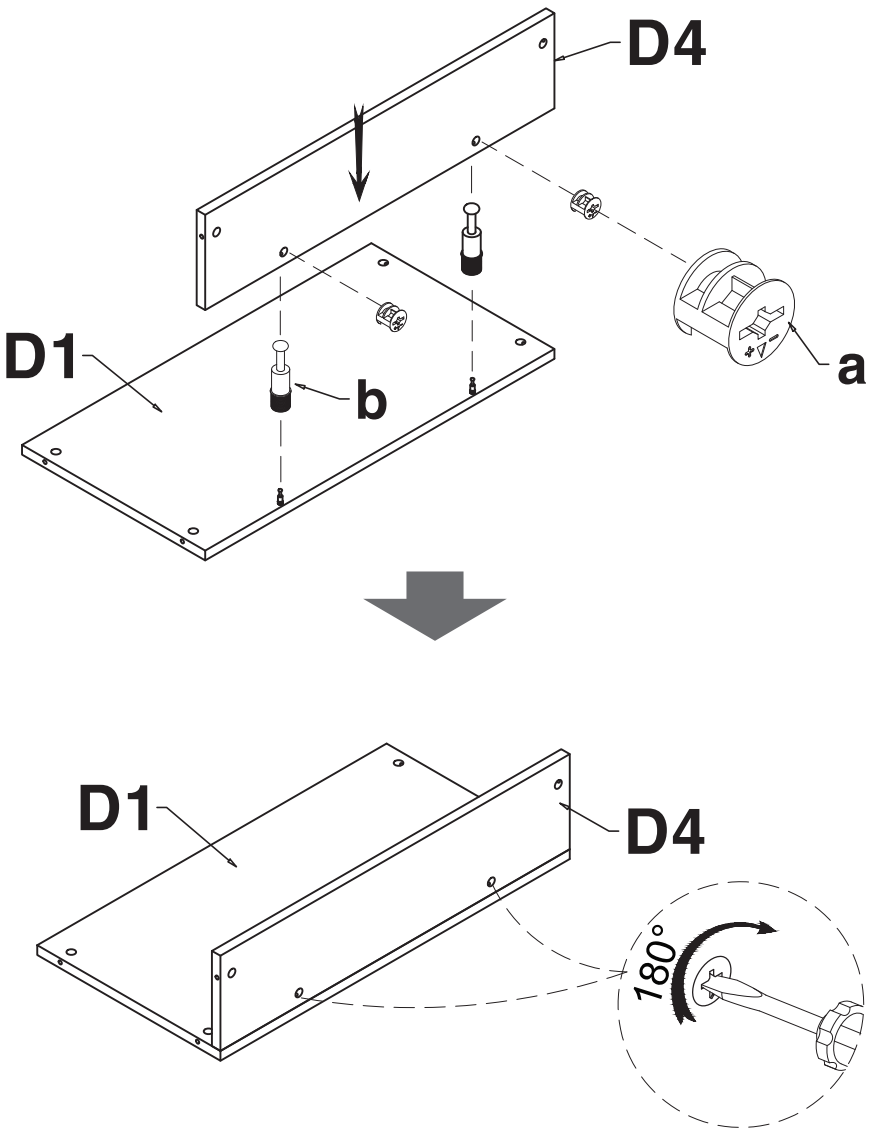

Step - 3

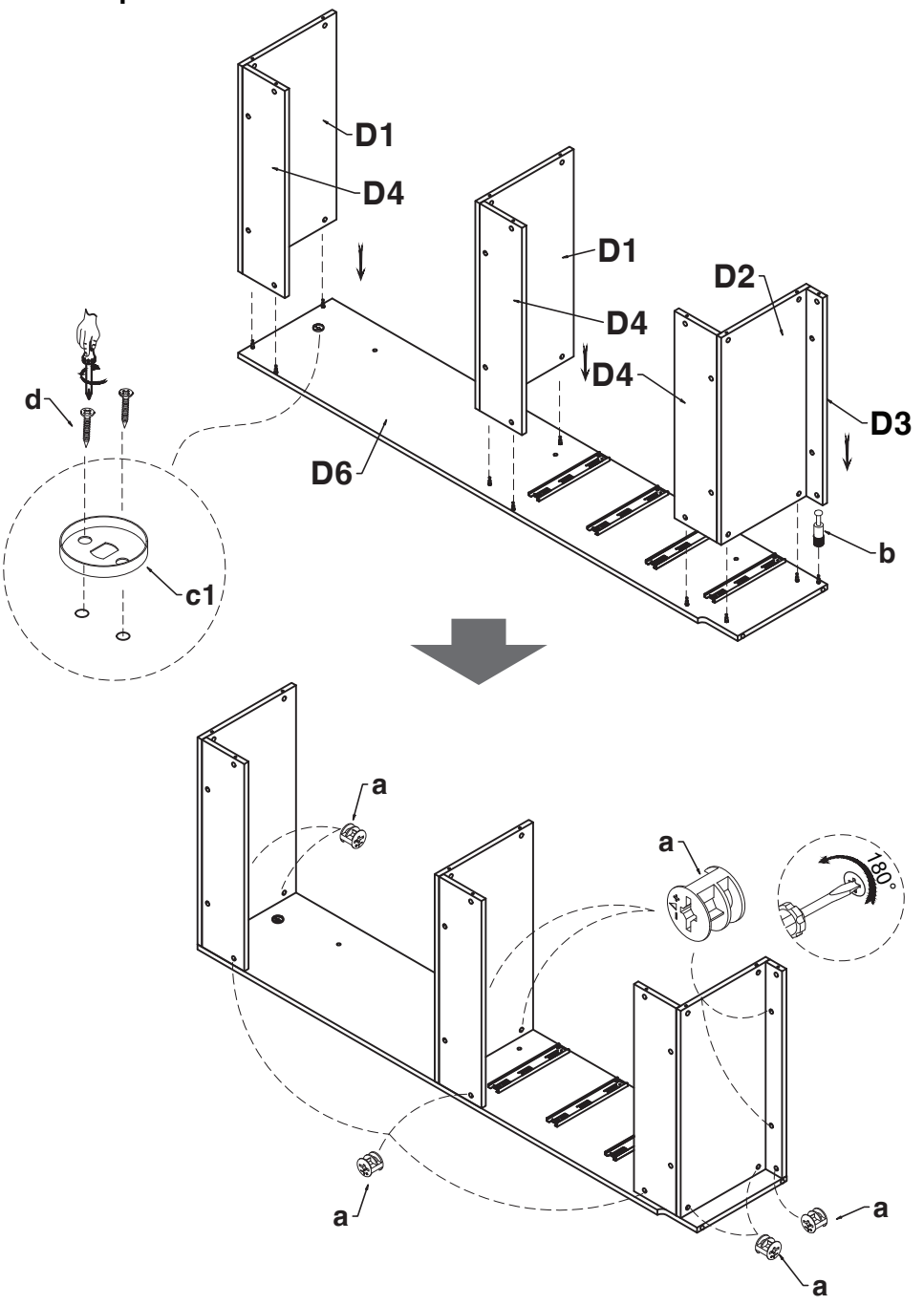

Step - 4

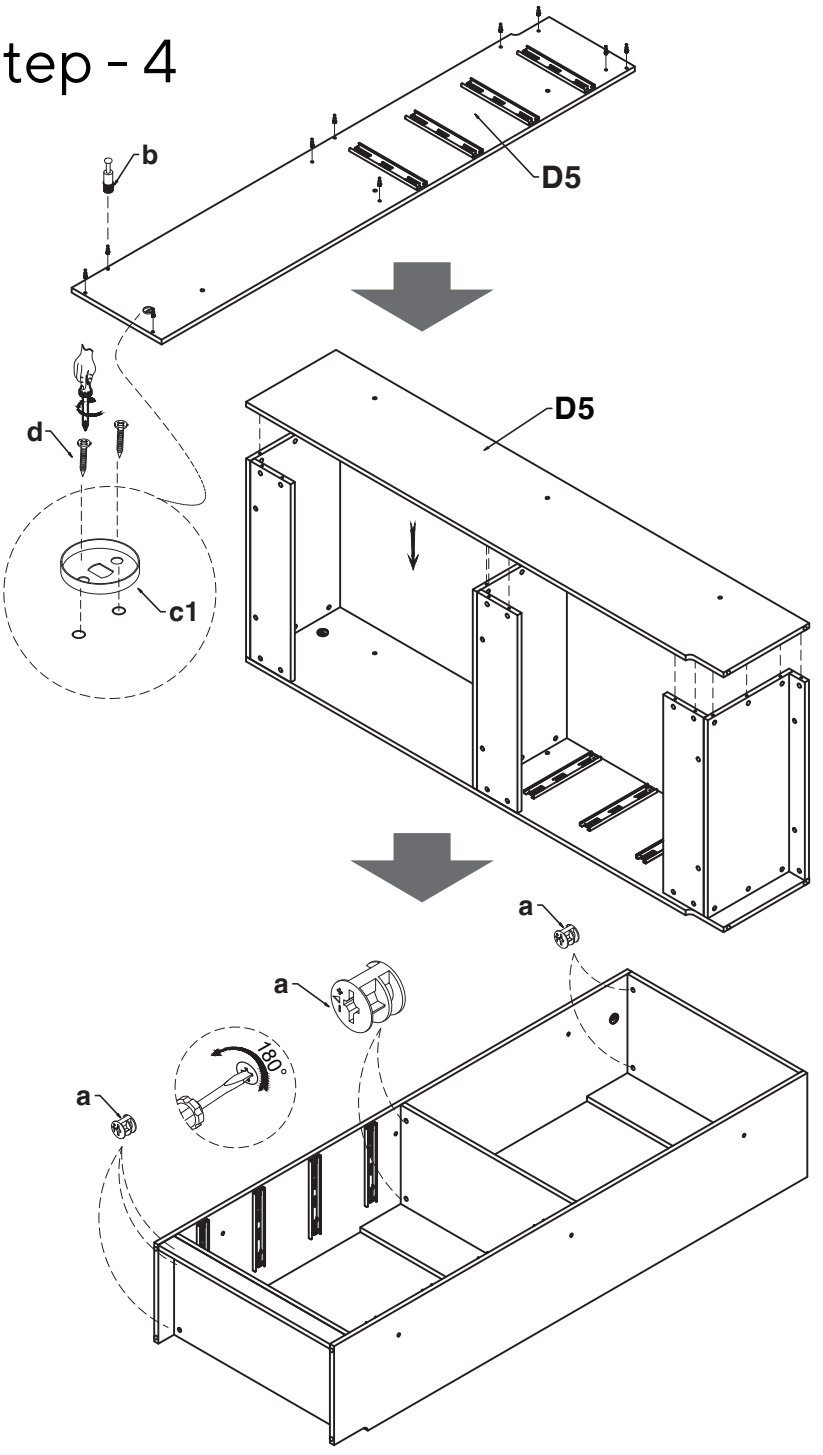

Step - 5

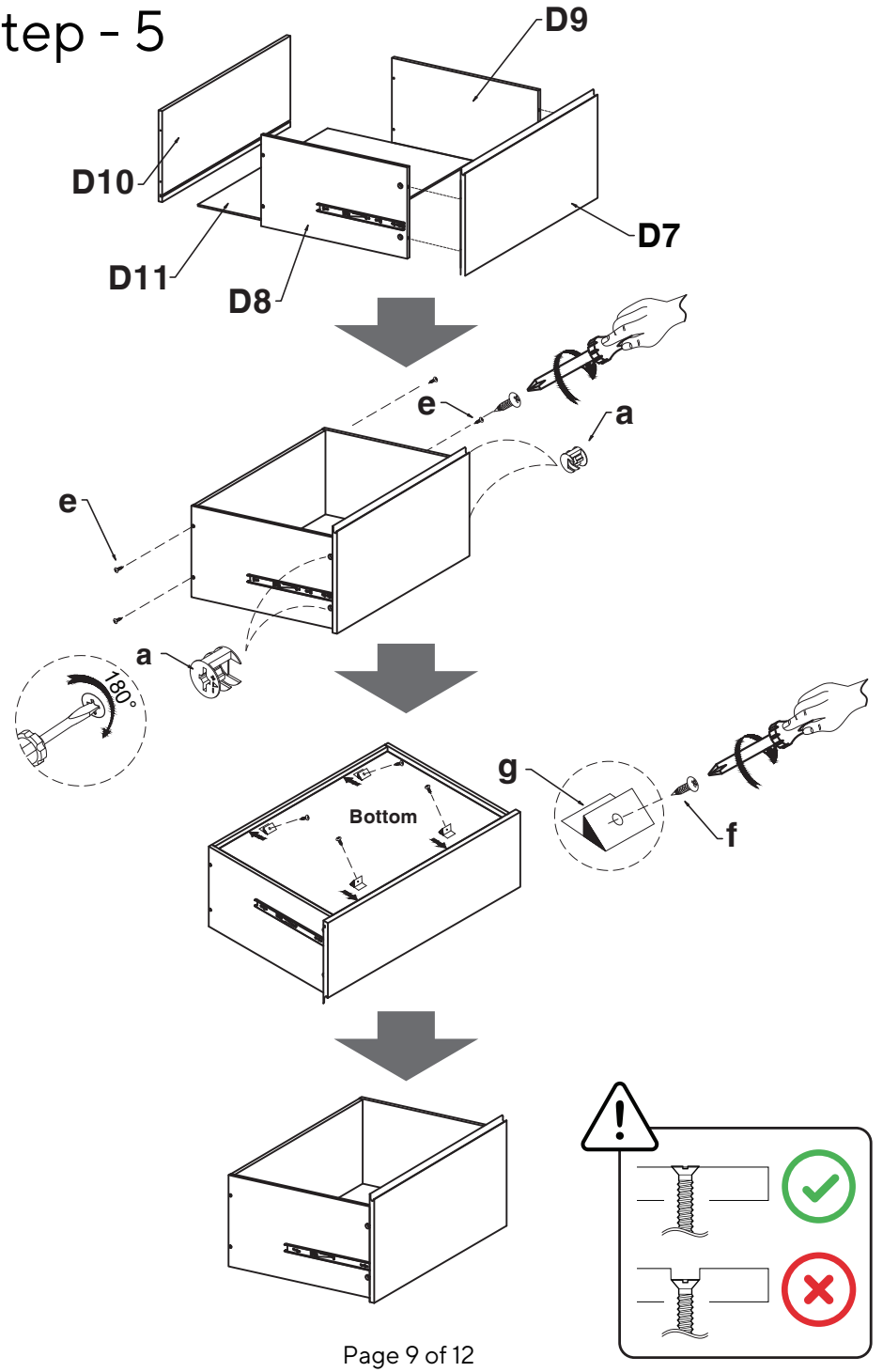

Step - 6

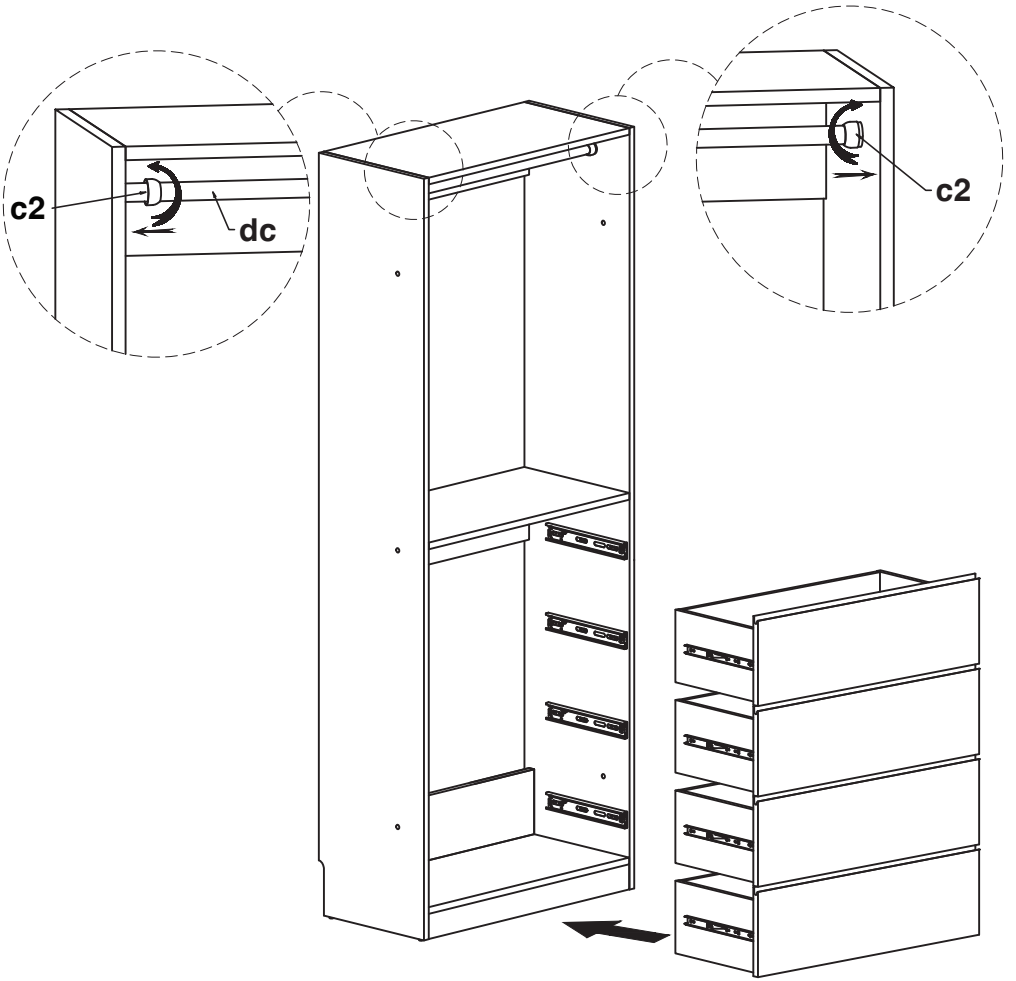

BE CAREFUL !

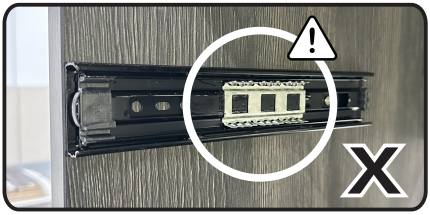

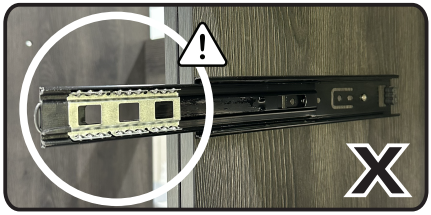







1

2







3

4

Done

Align the drawer slides from both sides and push in.
After hearing the click sound from both sides, quikly and firmly push the drawer all the way to ensure both drawer slides sit correctly.

Step - 7

Connecting

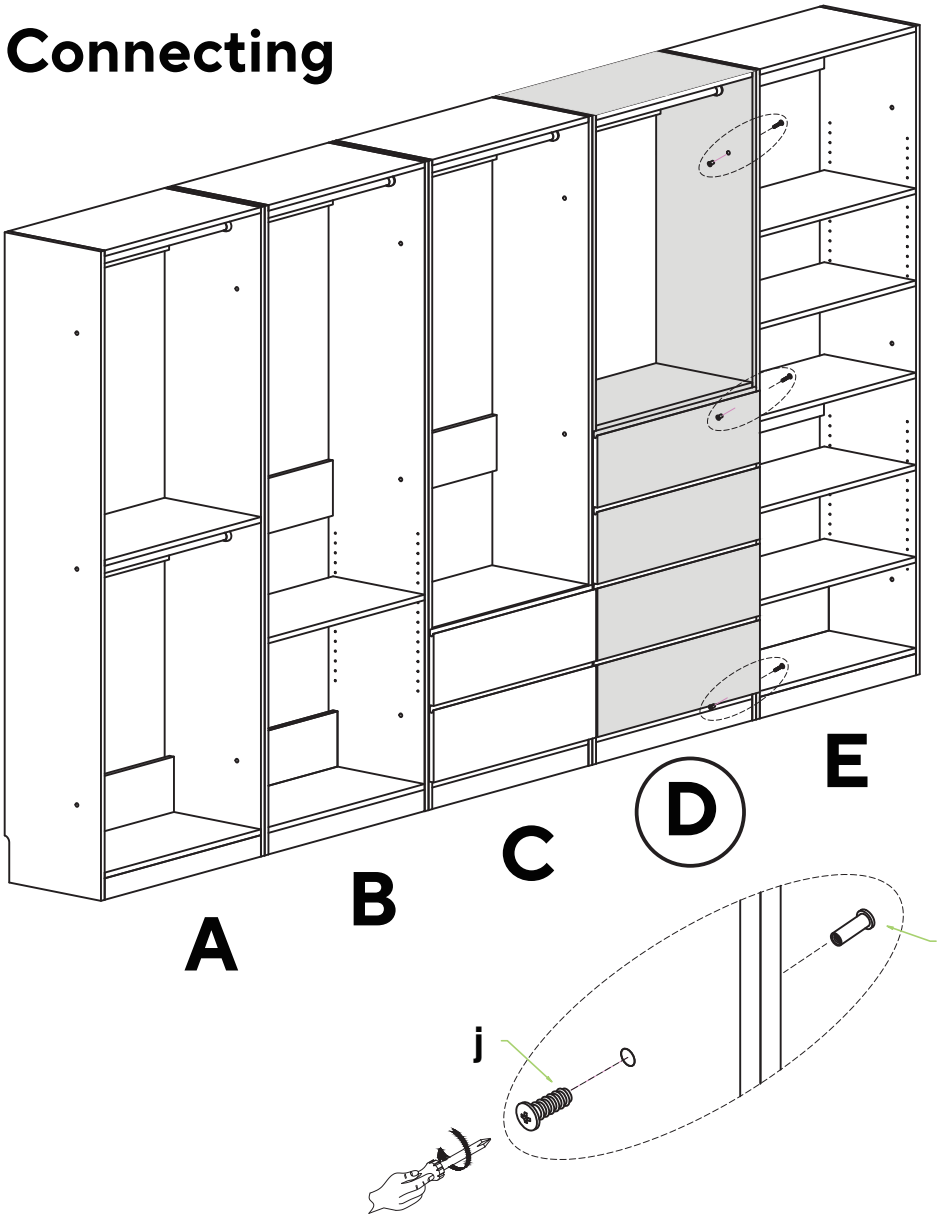

If you require any additional information or help on assembly,
please contact **sales@garagetechusa.com**

KLAIR LIVING