# Compartment Sink Assembly Instructions

**Step 1.** Carefully remove contents of carton. position sink upside down on a protected surface so you can access the underside of the sink. Install leg assembly into gussets at each end.

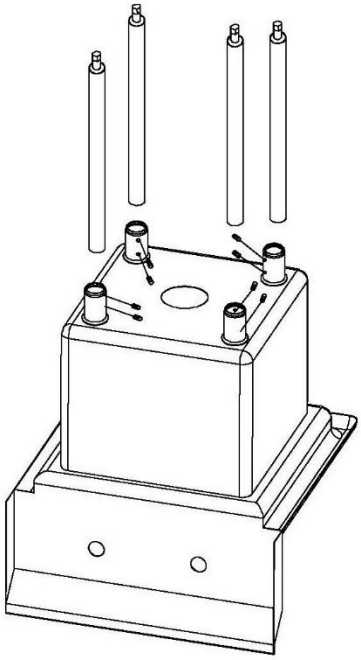

**Step 2**. Tighten each Set Screw using 5/32” Allen Wrench included with your sink

**Step 3.** Carefully turn sink over onto its legs. Check for stability and adjust Bullet Feet as necessary

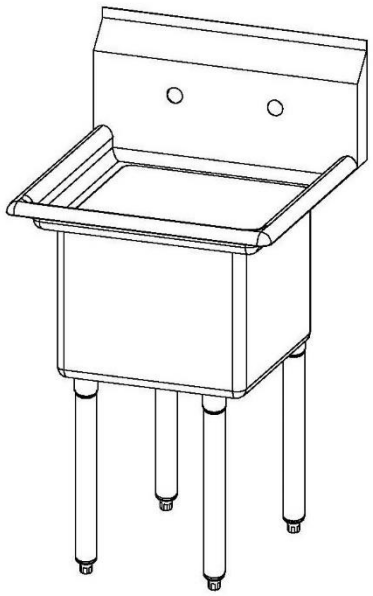

If you discover any damages, are missing any contents or need any kind of assistance please contact us by email or by phone. support@koolmore.com 718-576-6342

Koolmore
1411 President street STE 3A
Brooklyn NY 11213
718-576-6342
support@koolmore.com