Item # 1007 945 627
Model # GFS00744A

HAMPTON BAY®

USE AND CARE GUIDE

COTTLEVILLE GAZEBO

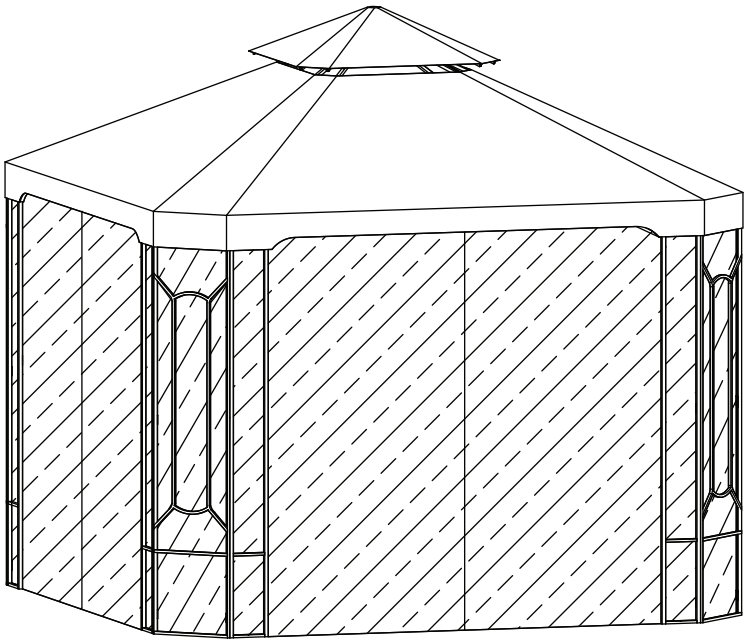

Questions, problems, missing parts? Before returning to the store,
call Hampton Bay Customer Service.
8 a.m. - 7 p.m., EST, Monday - Friday, 9 a.m. - 6 p.m., EST, Saturday

1-855-HD-HAMPTON

HAMPTONBAY.COM

THANK YOU

We appreciate the trust and confidence you have placed in Hampton Bay through the purchase of this gazebo. We strive to continually create quality products designed to enhance your home. Visit us online to see our full line of products available for your home improvement needs. Thank you for choosing Hampton Bay!

Table of Contents

Table of Contents 2
Safety Information 2
- Product Caution 2
- Safety Warnings 2

Warranty 2
- What is Covered 2
- What is Not Covered 2

Pre-Assembly 3
- Planning Assembly 3
- Hardware Included 3
- Package Contents 4

Assembly 5
Care and Cleaning 13

Safety Information

PRODUCT CAUTION

This gazebo was made for the explicit purpose of providing outdoor functions and is not to be used as a toy. This product is intended for normal outdoor use; however, the manufacturer recommends storing and / or covering this gazebo when any formidable / severe weather is approaching. Do not locate the product near open flame. Do not use the product as a support. Do not shake, lean or climb on product. Children under the age of 10, near the product, should be supervised by a competent adult at all times. This product is NOT intended for commercial use and will void the warranty.

SAFETY WARNINGS

WARNING: Keep all flame and heat sources away from this gazebo fabric.

WARNING: This application of any foreign substance to the gazebo fabricc may render the flame resistent properties ineffective.

WARNING: This gazebo is made with fabric that meets CPAI - 84 specifications for flame resistence. It is not fire proof. The fabric will burn if left continuous contact with any flame source.

CAUTION: Do not locate the product near any heat source.

CAUTION: When not in use, secure the product in a cool and covered location.

Warranty

2 YEAR FRAME AND 2 YEAR FABRIC LIMITED WARRANTY

WHAT IS COVERED

We warrant the frame and fabric to be free of manufacturing defects to the original purchaser for two years.

WHAT IS NOT COVERED

It remains the customer's responsibility for freight and packaging charges to and from our service center. This warranty does not cover commercial use, hardware, acts of nature, fire, freezing and abusive use. In addition, purchased parts are not covered under this warranty. We reserve the right to make substitutions with similar merchandise, if the model in question is no longer in production.

Contact the Customer Service Team at 1-855-HD-HAMPTON or visit www.Homedepot.com.

Pre-Assembly

PLANNING ASSEMBLY

Read all instructions before assembly.
To avoid damaging this product, assemble it on a soft, non-abrasive surface such as carpet or cardboard.

NOTE: More than one person may be required to assemble this product.

HARDWARE INCLUDED

NOTE: Hardware not shown to actual size.

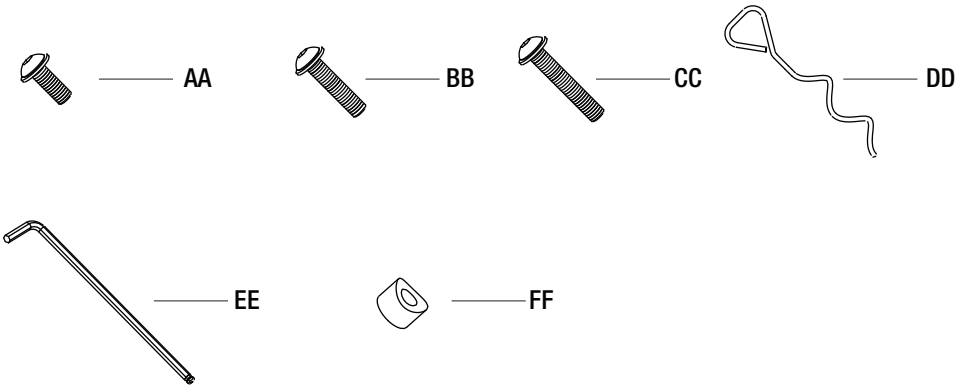

Part	Description	Quantity
AA	M6x12 combination bolt	16+1
BB	M6x30 combination bolt	16+1
CC	M6x35 combination bolt	4+1
DD	Ground spike	12+1
EE	Hex wrench	2
FF	Plastic washer	4

Pre-Assembly (continued)

PACKAGE CONTENTS

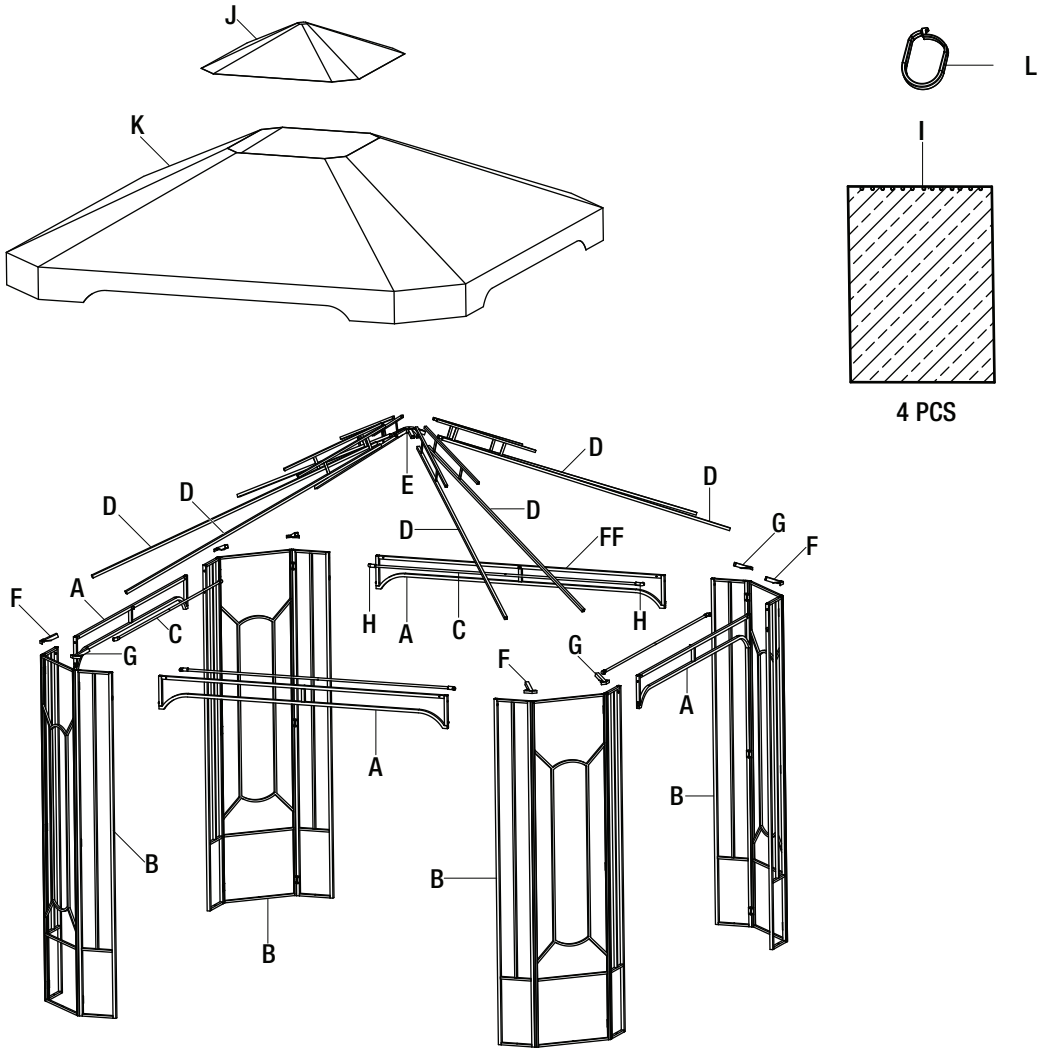

Part	Description	Quantity
A	Beam	4
B	Panel	4
C	Track tube	4
D	Canopy spoke	8
E	Canopy hub	1
F	Corner connector – 1	4
G	Corner connector – 2	4
H	Track tube connector	8
I	Netting	4
J	Small fabric cover	1
K	Large fabric cover	1
L	Q-shape plastic ring	48

Assembly

1 Opening the panels

- ☐ Open the four panels (B).

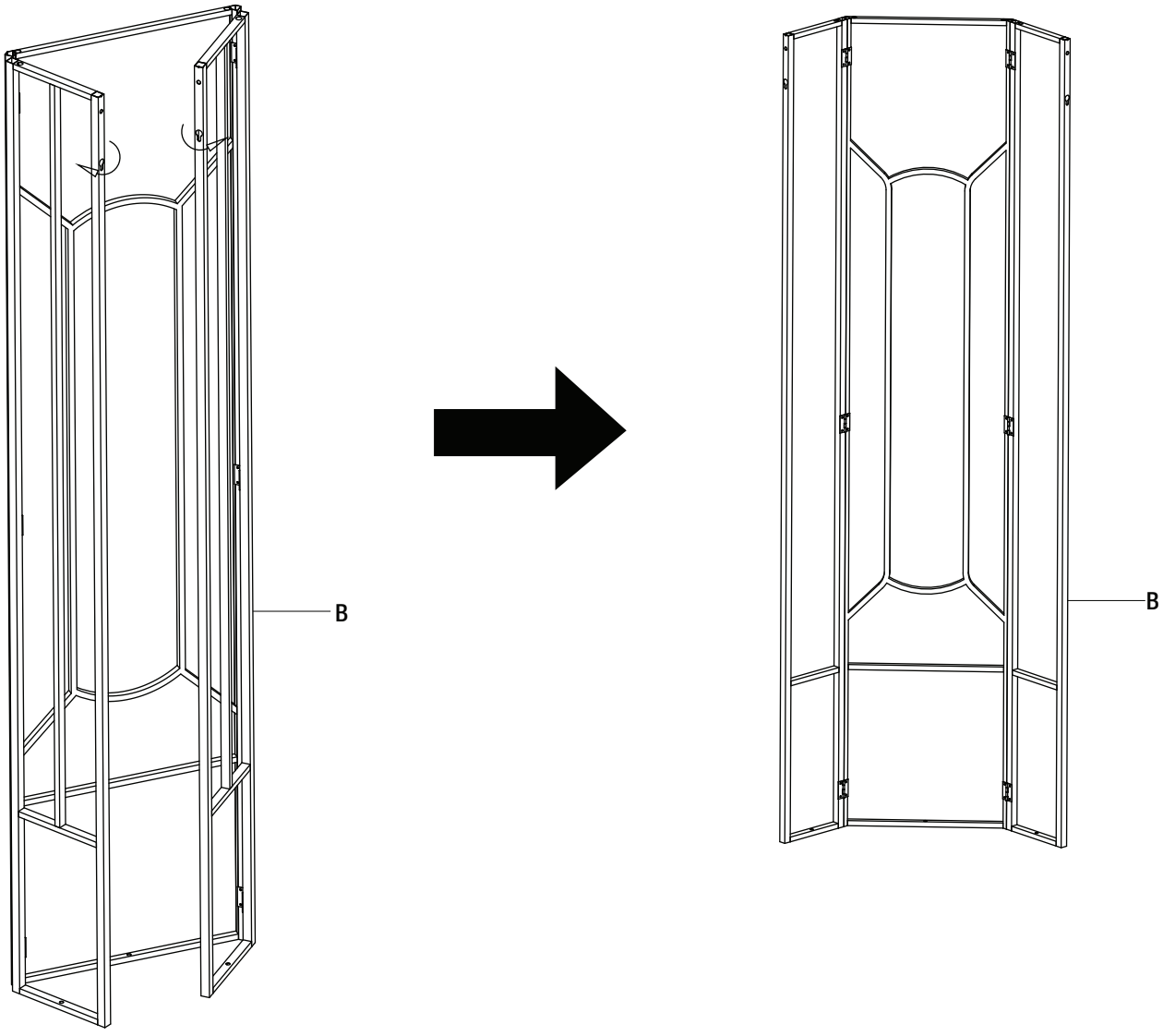

Assembly (continued)

2 Securing the corner connectors

- ☐ Secure the corner connector - 1 (F) and the corner connector - 2 (G) to the top corners of the panel (B) using M6x12 combination bolts (AA).
- ☐ Repeat this step for the other corner connectors.

NOTE: Fully tighten all bolts using the hex wrench (EE).

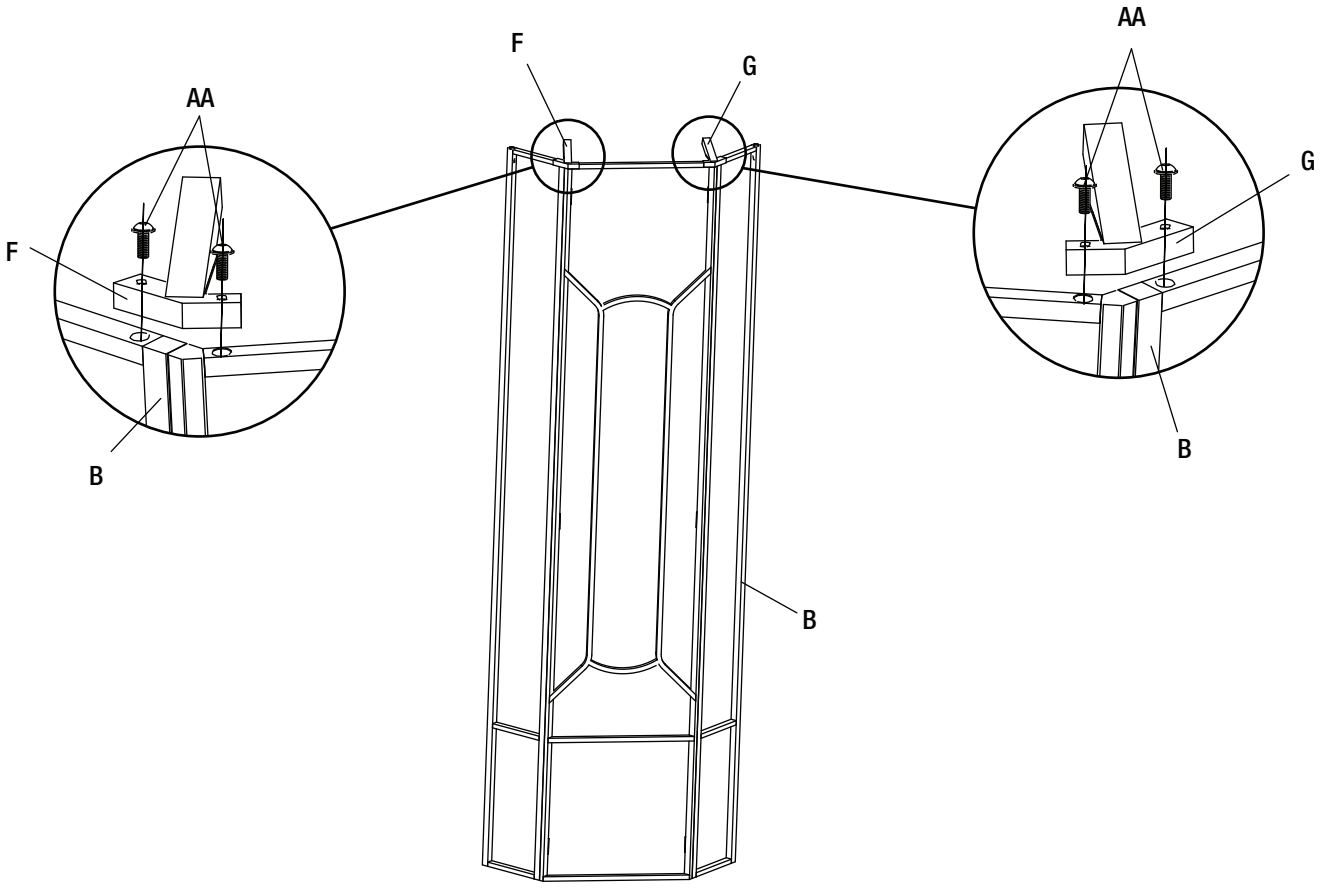

Assembly (continued)

3 Attaching the track tubes

- ☐ Insert the track tube (C) into the track tube connector (H), and secure the assembled part to the beam (A) using M6x30 combination bolts (BB).
- ☐ Insert an M6x35 combination bolt (CC) through the track tube (C), the plastic washer (FF), and secure to the beam (A) using the hex wrench (EE).
- ☐ Repeat this step for the other track tubes.

NOTE: Fully tighten all bolts using the hex wrench (EE).

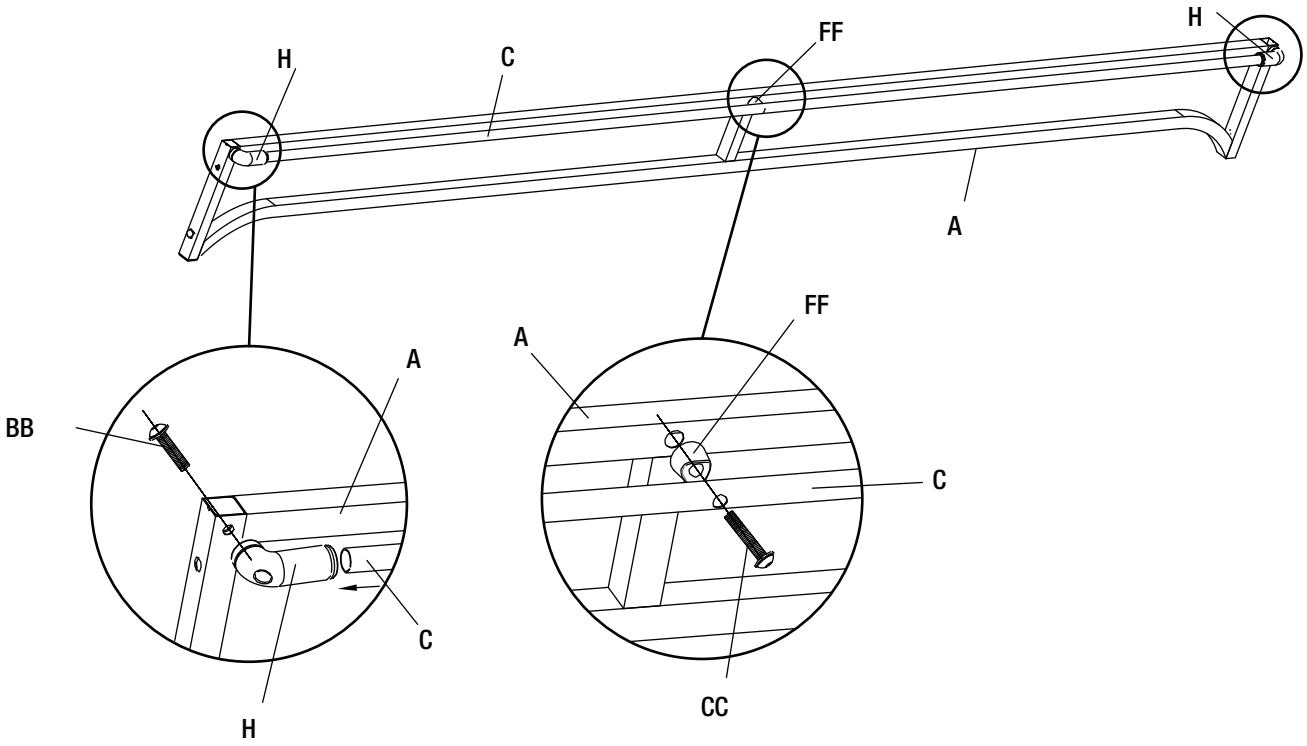

Assembly (continued)

4 Connecting the panels and the beams

- □ Insert the beam (A) into the panel (B). Secure the beam (A) and the panel (B) using an M6x30 combination bolt (BB).
- □ Repeat above step for the other panels and the beams.

NOTE 1: Place the track tubes (C) toward the inside to assemble the netting correctly.

NOTE 2: More than two people are required to assemble this step.

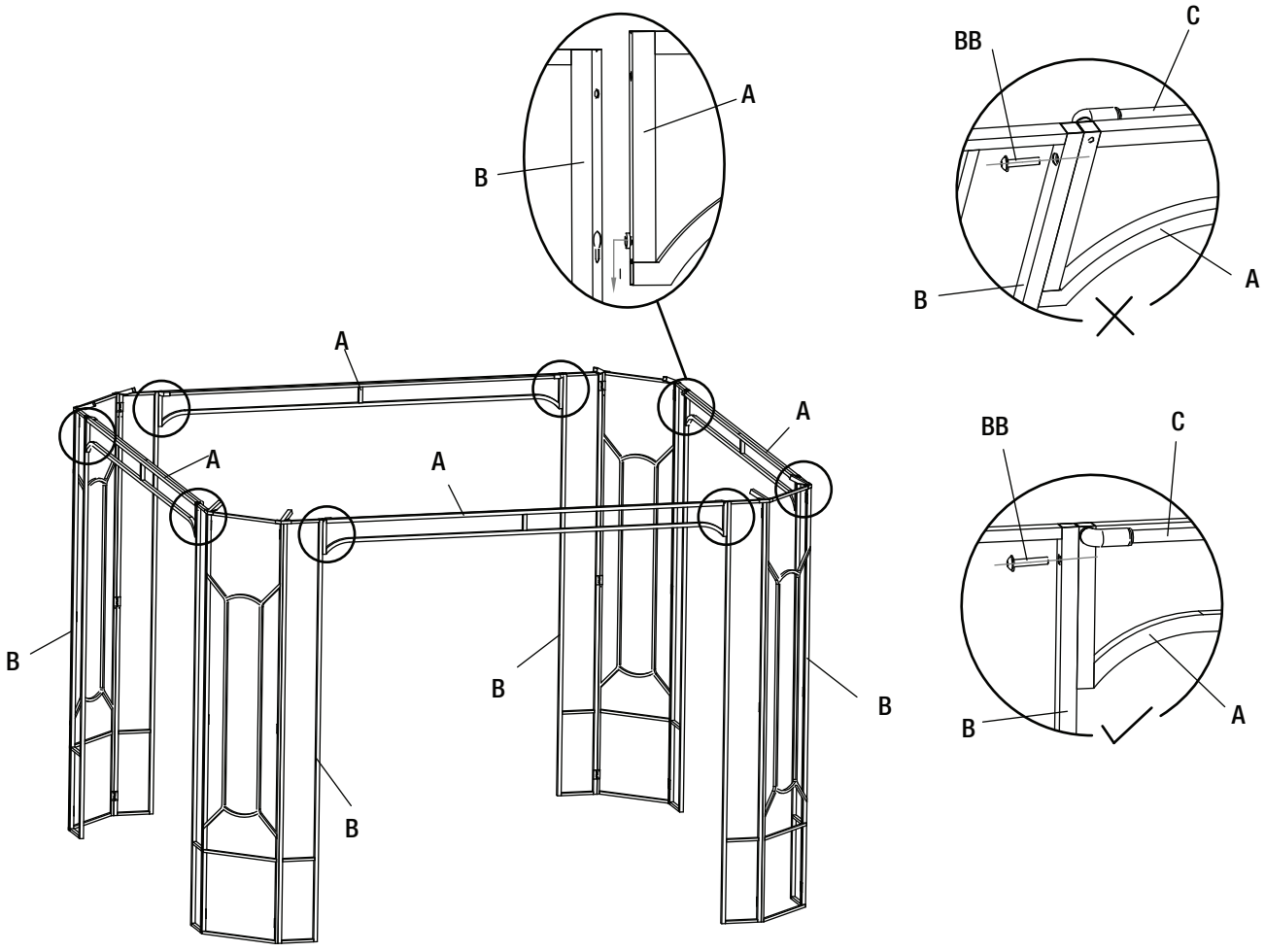

Assembly (continued)

5 Attaching the canopy spokes to the canopy hub and the beams

- ☐ Insert the long tube of the canopy spokes (D) into the canopy hub (E).
- ☐ Insert the other side of the long tube of the canopy spokes (D) into the corner connectors (F & G), as shown below.

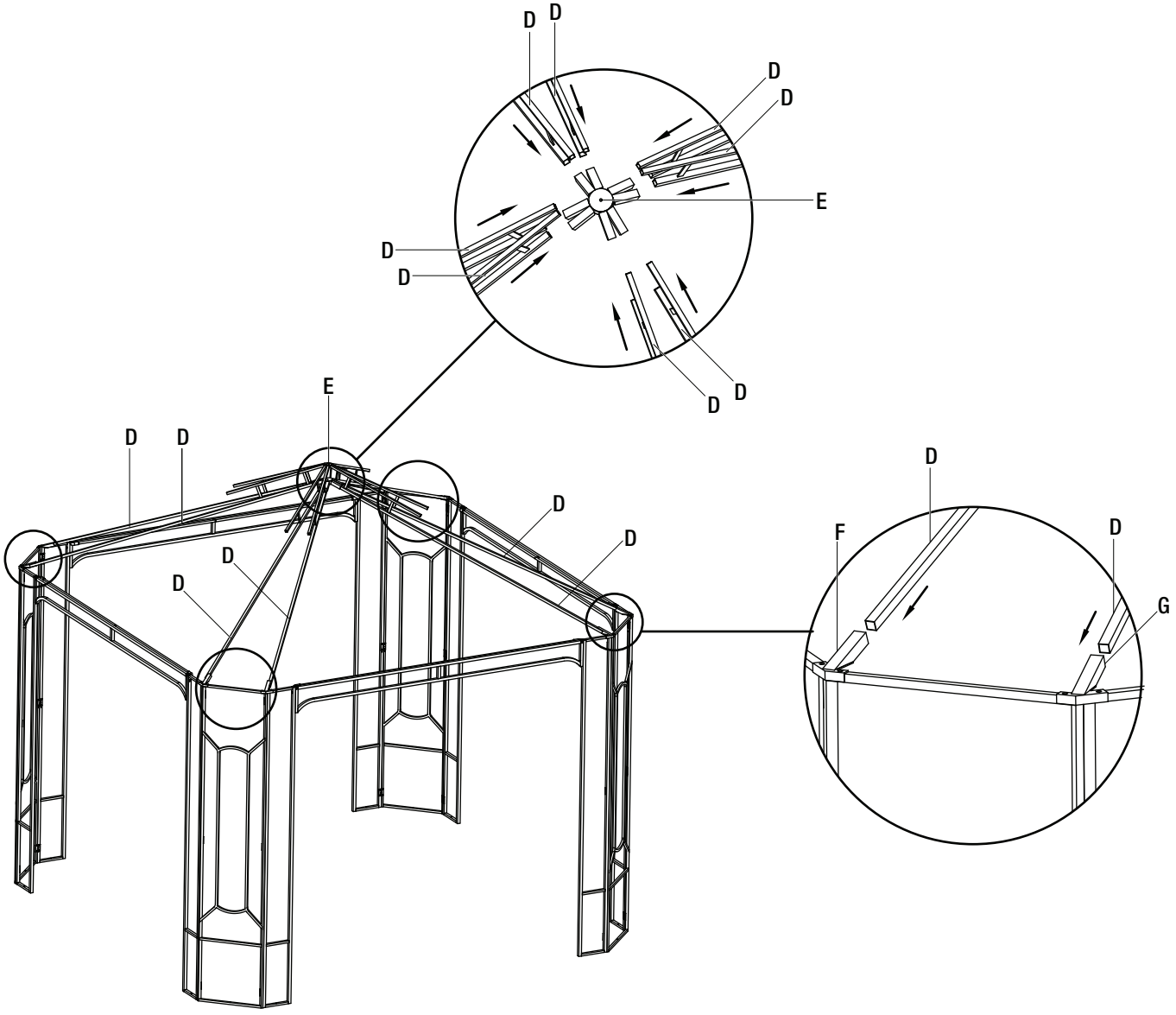

Assembly (continued)

6 Attaching the large fabric cover

- ☐ Place the large fabric cover (K) onto the assembled frame.

NOTE: Do not fully extend the fabric cover.

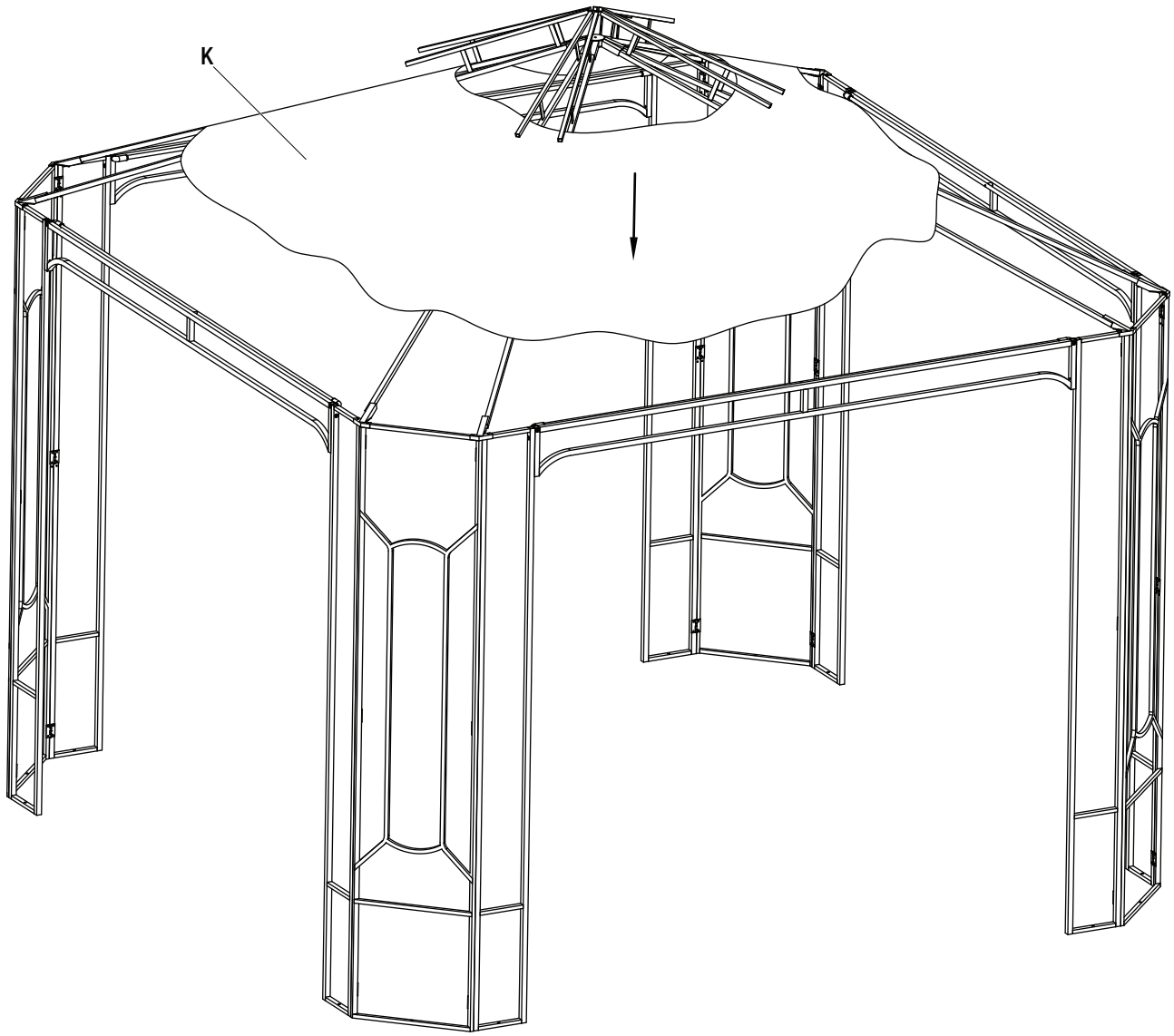

7 Attaching the small fabric cover

□ Place the small fabric cover (J) and secure each corner by fully extending the fabric to the assembled short tubes of the canopy spokes (D).

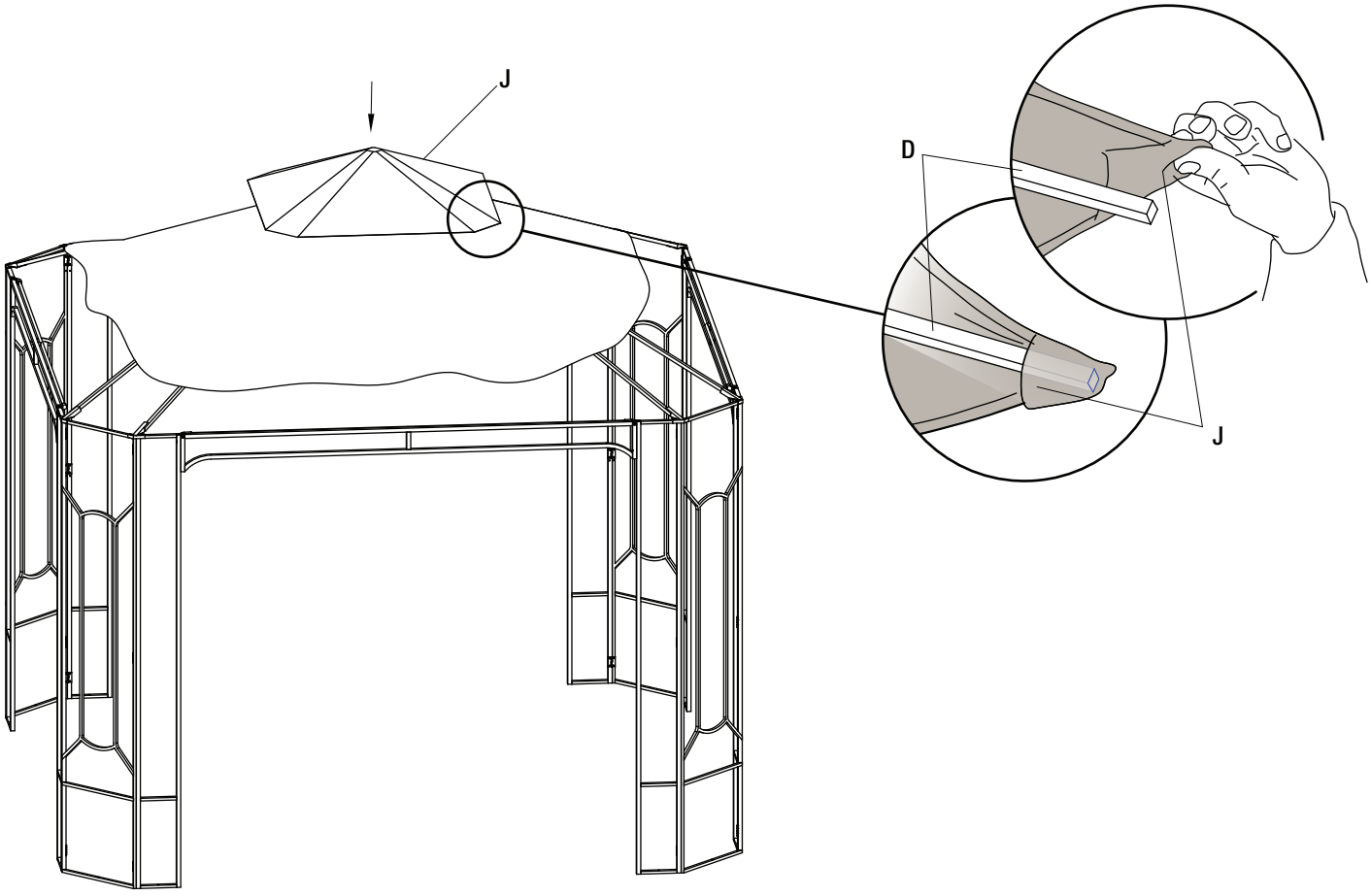

8 Tying the large fabric cover to the beams and the panels

□ Fully extend the large fabric cover (K) and tie it to the beams (A) and the panels (B) by affixing the Velcro.

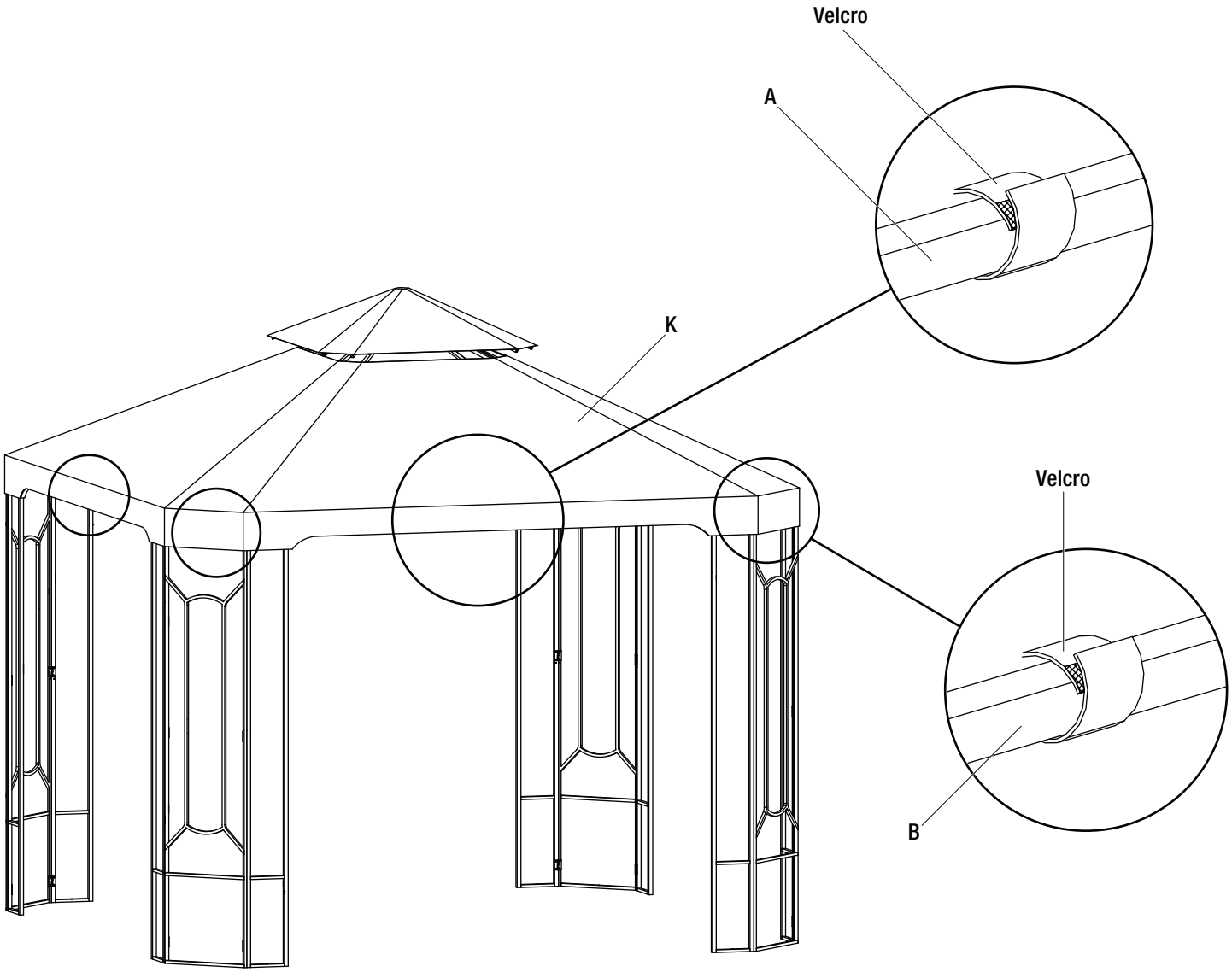

Assembly (continued)

9 Hanging the netting and securing the panels to the ground

- □ Hang the netting (I) to the panels (B) and the track tubes (C) by using the Q-shape plastic rings (L).
- □ Secure the panels (B) to the ground using the ground spikes (DD).
- □ Ensure the ground spikes are inserted fully into the ground and all the connections are secure before use.

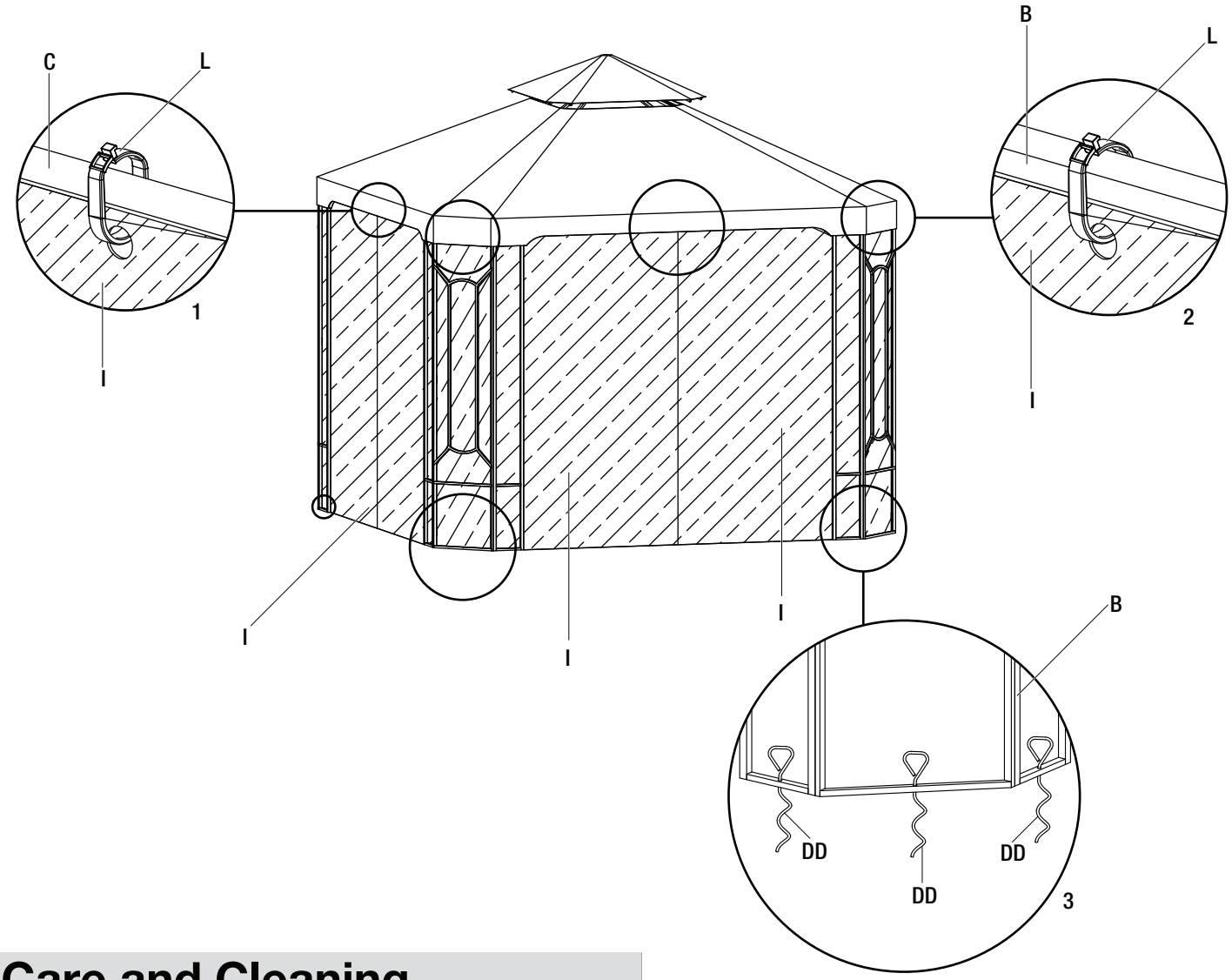

Care and Cleaning

- □ For best results, clean the gazebo with a damp cloth and dry thoroughly. This will help prevent mildew by removing dirt particles that may accumulate.
- □ Do not clean with abrasive materials, bleach, or solvents.
- □ Keep the gazebo away from fire, extreme heat, freezing conditions, and inclement weather such as rain, hail, sleet, snow, or wind.

HAMPTON BAY®

Questions, problems, missing parts? Before returning to the store,
call Hampton Bay Customer Service.
8 a.m. - 7 p.m., EST, Monday - Friday, 9 a.m. - 6 p.m., EST, Saturday

1-855-HD-HAMPTON

HOMEDEPOT.COM

Retain this manual for future use.