R2320

REED INSTRUMENTS

Infrared Thermometer

WARRANTY 1 YEAR WARRANTY

Instruction Manual

REED Instruments

1-877-849-2127 | info@reedinstruments.com | www.reedinstruments.com

Table of Contents

Introduction 3
Product Quality 3
Safety 3
Features 4
Included 4
Specifications 4-5
Instrument Description 6
Display Description 7
Distance & Spot Size 8
Operating Instructions 9-13
Power ON and OFF 9
Manual Measurement 9
Continuous Temperature Measurement (Trigger Lock) 9
Maximum, Minimum, Average and Differential Functions 10
Turning Laser On/Off 10
Setting the High Temperature Alarm 11
Setting the Low Temperature Alarm 11
Adjusting Emissivity 12
Switching the Unit of Measure (°F/°C) 12
Audible Alarm Setting 13
Trigger Lock Setup 13
Turning High and Low Alarms ON/OFF 13-14
Fault Diagnostics 15
Battery Replacement 16
Applications 16
Appendix: Emissivity Chart 16-18
Product Care 18
Product Warranty 19
Product Disposal and Recycling 19
Product Support 19

Introduction

Thank you for purchasing your REED R2320 Infrared Thermometer. Please read the following instructions carefully before using your instrument. By following the steps outlined in this manual your meter will provide years of reliable service.

Product Quality

This product has been manufactured in an ISO9001 facility and has been calibrated during the manufacturing process to meet stated product specifications. If a certificate of calibration is required please contact the nearest authorized REED distributor or authorized Service Center. Please note an additional fee for this service will apply.

Safety

- Never attempt to repair or modify your instrument. Dismantling your product, other than for the purpose of replacing batteries, may cause damage that will not be covered under the manufacturer's warranty. Servicing should only be provided by an authorized service center.
- Use extreme caution when the laser beam is turned on.
- Do not let the beam enter your eye, another person's eye or the eye of an animal.
- Be careful not to point the beam off a reflective surface and strike your eye.
- Do not allow the laser light beam to impinge on any gas which can explode.

Features

- Built-in laser pointer identifies target area
- User selectable °F or °C
- 30:1 Distance to Spot size ratio
- Bright color display (EBTN)
- Digitally adjustable emissivity
- Max, Min, Average and Differential readings
- Audible (beep) and visual (tri-color LED) user adjustable alarms
- Internal memory stores up to 5 pre-set high & low alarms and 5 emissivity settings
- Trigger lock and tripod mount for continuous monitoring
- Low battery indication and auto shut off

Included

- Carrying Case
- Battery

Specifications

Temperature Range:	-26 to 1472°F (-32 to 800°C)
Accuracy:	Basic: ±1.8% of reading or 3.6°F (1.8°C) Detailed: ≥0°C: ±1.8°C or ±1.8% of reading whichever is greater <0°C: ±(1.8°C+0.1°C/°C) ≥32°F: ±3.6°F or ±1.8% of reading, whichever is greater, <32°F:±(3.6°F+0.1°F/°F)
Resolution:	0.1°F (0.1°C)
Optical Resolution (D:S):	30:1
Repeatability:	0.7°C or 0.7%, whichever is greater (1.5°F or 0.7%, whichever is greater)
Spectral Response:	8 to 14µm

continued…

Emissivity:	0.1 to 1.0 (Adjustable)
Response Time:	250ms
Backlit Display:	Yes (Color EBTN)
Display Hold:	Yes
High/Low Alarms:	Yes (audible and visual)
Alarm Indicators:	LED (High: Red, Low: Blue)
Max/Min:	Yes
Average and Differential:	Yes
F/C Switchable:	Yes
Trigger Lock:	Yes
Tripod Mountable:	Yes
Laser Class:	Class II
Low Battery Indicator:	Yes
Power Supply:	9V Battery
Battery Life:	Approx. 10 hours (with continuous use, backlight on)
Product Certifications:	CE, RoHS
Operating Temperature:	32 to 122°F (0 to 50°C)
Storage Temperature:	-4 to 140°F (-20 to 60°C)
Operating Humidity Range:	10 to 90%
Maximum Operating Altitude:	6561' (2000m)
Maximum Storage Altitude:	39370' (12000m)
Dimensions:	7 x 4.98 x 2" (179 × 126.5 × 53mm)
Weight:	10.95oz (310g)

Instrument Description

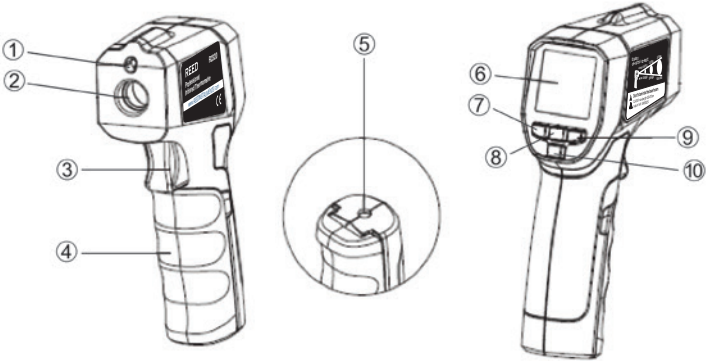

1. Laser Pointer Beam
2. IR Sensor
3. Trigger
4. Battery Cover
5. Tripod Mount
6. LCD Display
7. Mode Button/Down Arrow
8. Set Button
9. High/Low Alarm Button/ Up Arrow
10. Laser ON/OFF Button

Display Description

🔒	Temperature Measurement Trigger Lock
🔇	Audible Alarm Indicator
HI OK LO	Temperature Measurement Alarm Indicator
▭	Low Battery
SCAN	Temperature Measurement Active
HOLD	Measurement Data Hold
°C °F	Unit of Measurement
888.8	Temperature Measurement Value
888.8	Temperature Measurement Value from Selected Mode
ε=0.88	Emissivity
⚠	Laser On
MAX MIN AVG DIF	Mode

Distance & Spot Size

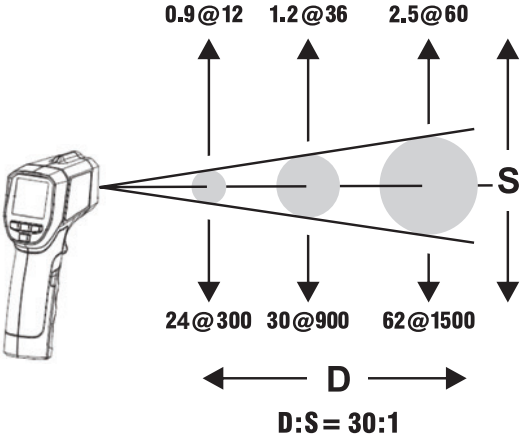

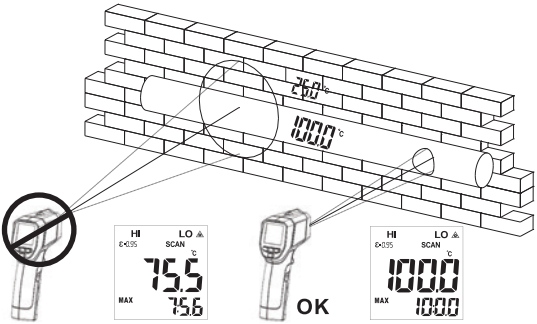

Operating Instructions

Power ON and OFF

1. Gently pull the trigger to turn the thermometer on. The LCD display and the backlight will turn on.
2. The thermometer will automatically shut off after 15 seconds of inactivity.

Manual Measurement

1. Pull and hold the trigger after aiming at the target. The **SCAN** icon will flash, indicating that the target temperature is being measured.
2. When the trigger is released, the **SCAN** icon will disappear and the **HOLD** icon will appear indicating that measurement has stopped and the last measured temperature will remain on-screen until another measurement is taken or the unit turns off.

Continuous Temperature Measurement (Trigger Lock)

The instrument allows for a continuous temperature measurement time to be set from 1 minute to 5 hours. Refer to *Trigger Lock Setup* for details.

Note: This function is applicable for processes that require regular monitoring of temperature.

1. Once the trigger lock function is enabled, the 🔒 icon will appear on the display and the SCAN icon will flash when the trigger is pressed.
2. Pull the trigger again to stop measuring and both the 🔒 and SCAN icons will disappear and the HOLD icon will appear. The thermometer will now hold the last measured value until the unit turns off after 15 seconds of inactivity or until testing is resumed.
3. When the continuous temperature measurement time is reached, the thermometer will automatically power off and save the last measured value. You can view the last measured value by pulling the trigger.

Note: The last measured value is cleared when a new test scan is started.

continued…

Maximum, Minimum, Average and Differential Functions

Press the **MODE** button to toggle between MAX/MIN/AVG/DIF modes. The temperature value of corresponding modes are shown in the secondary display area.

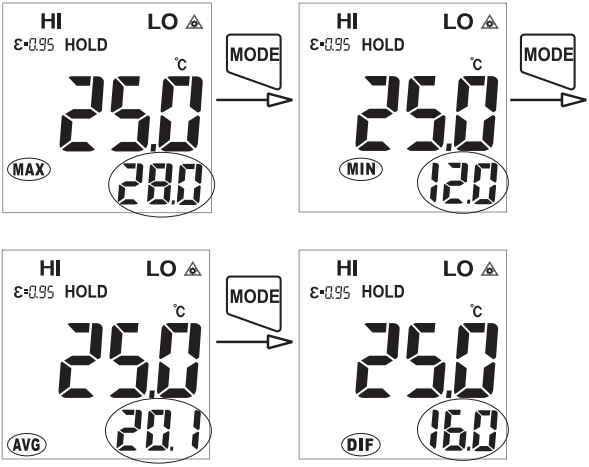

Turning Laser On/Off

Press the button to turn the laser indicator function ON and OFF. When it is turned on, the laser indicator will be displayed on the LCD, while the red laser beam will indicate the position you are measuring during testing.

continued…

Setting the High Temperature Alarm

Press the **SET** button once to enter the high alarm limit setup. Press the ⚙ button to toggle between alarm preset values as indicated by P1-P5. Use the **UP** or **DOWN** buttons to set the temperature value within selected the preset. Press the **UP** or **DOWN** buttons to add or subtract by 1 temperature value. Hold the **UP** or **DOWN** buttons to add or subtract by 10 temperature values. The instrument will exit the setup after 10 seconds of inactivity or if the trigger is pulled at any time.

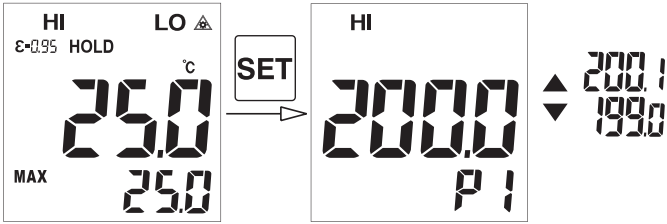

Setting the Low Temperature Alarm

Press the **SET** button twice to enter the low alarm limit setup. The meter will automatically default to the previously selected preset. Use the **UP** or **DOWN** buttons to set the temperature value within selected the preset. Press the **UP** or **DOWN** buttons to add or subtract by 1 temperature value. Hold the **UP** or **DOWN** buttons to add or subtract by 10 temperature values. The instrument will exit the setup after 10 seconds of inactivity or if the trigger is pulled at any time.

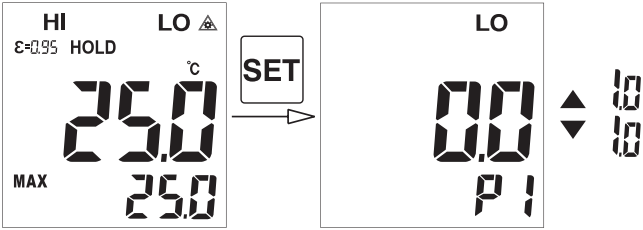

continued…

Adjusting Emissivity

The instrument's emissivity can be adjusted from 0.01 to 1.0 to meet the type of surface being measured. Refer to the *Emissivity Chart* for reference. Press the **SET** button three times to enter the emissivity setup. Press the button to toggle between emissivity preset values as indicated by P1-P5. Use the **UP** and **DOWN** buttons to set the emissivity values. Press the **UP** and **DOWN** buttons to add or subtract 0.01 unit and/or hold the **UP** and **DOWN** buttons to add or subtract 0.1. The instrument will exit the setup after 10 seconds of inactivity or if the trigger is pulled at any time.

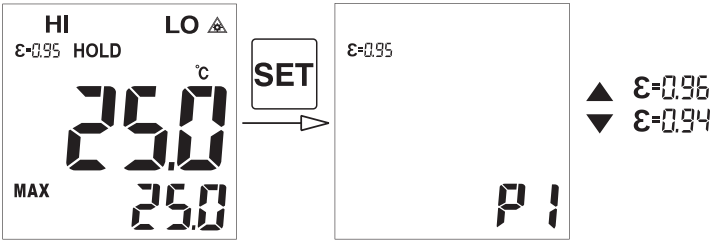

Switching the Unit of Measure (°F/°C)

Press the **SET** button four times to enter unit of measure setup. Use the **UP** and **DOWN** buttons to switch between °F and °C units. The instrument will exit the setup after 10 seconds of inactivity or if the trigger is pulled at any time.

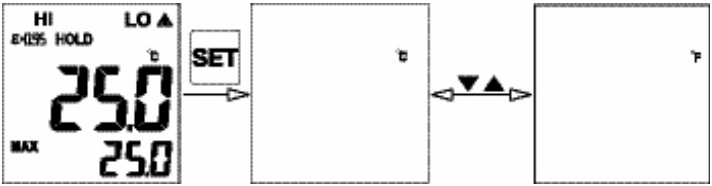

continued…

Audible Alarm Setting

Press the **SET** button five times and the audible alarm indicator will appear on the display. Press the **UP** or **DOWN** buttons to turn the audible alarm On/Off. The instrument will exit the setup after 10 seconds of inactivity or if the trigger is pulled at any time.

Trigger Lock Setup

Press the **SET** button six times and the temperature measurement trigger lock indicator will appear on the display. Press the **UP** or **DOWN** buttons to turn the trigger lock setup on/off. When the temperature measurement trigger lock is turned on, press the button to enter the time stamp function and the hour field will flash. Press the **UP** or **DOWN** buttons to adjust the hour values. Press the button again to switch to the minutes field. To adjust, press the **UP** or **DOWN** buttons. Press the a third time to confirm the entered time stamp. The instrument will exit the setup after 10 seconds of inactivity or if the trigger is pulled at any time.

Turning High and Low Alarms ON/OFF

Press the **HI/LO** button to enable or disable the set alarms. To set alarms refer to *Setting the High Temperature Alarm* or *Setting the Low Temperature Alarm*. When the high alarm limit is turned on as indicated by **HI** on the display, the red LED and "HI" indicator will flash when the set temperature is exceeded. If the audible alarm function has been turned on, the meter will also emit a beeping sound.

When the low alarm limit is turned on as indicated by **LO** on the display, the blue LED and "LO" indicator will flash when the measured value is below the set alarm. If the audible alarm function has been turned on, the meter will also emit a beeping sound.

continued…

When both the low and high alarm limits are turned on as indicated by **HI/LO** on the display, the green LED will turn on and "OK" will appear on the display, indicating that the measured temperature value is normal.

When the "HI/LO" limit alarm function is turned on and the measured temperature value is within the high and low alarm limit range, the green LED lights up and the OK indicator is displayed, indicating that the measured temperature value is normal.

1. High/Low alarms on.
2. High alarm on.
3. Low alarm on.
4. No alarm set.

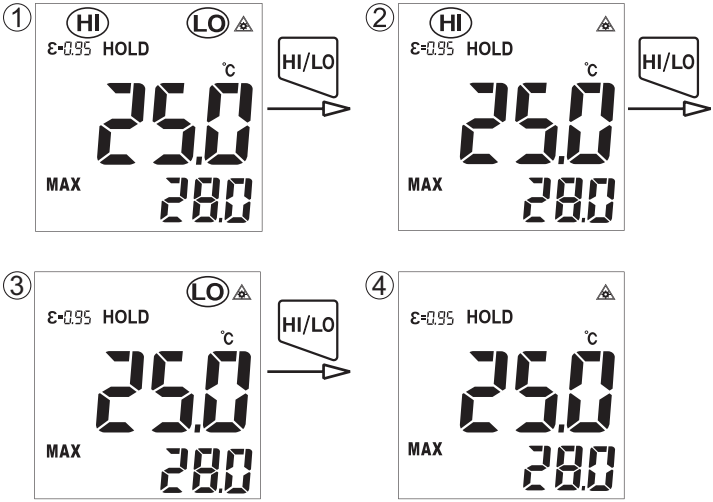

Battery Replacement

1. The battery should be replaced when ▭ is displayed.
2. Open the battery cover.
3. Replace the 9V battery.
4. Close the battery cover.

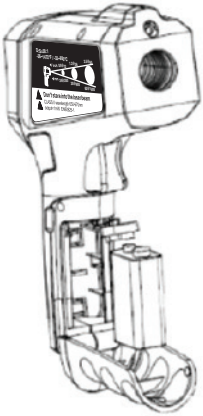

Applications

- Verify mechanical (bearings, motors) or electrical (circuit breaker boxes) equipment
- Calibration and control of heater and oven temperatures
- Monitoring materials in processes involving heating and/or cooling
- Quality control monitoring
- Research and development applications
- Automotive diagnostics
- Conduct HVAC energy audits

Appendix: Emissivity Chart

Emissivity is a term used to describe the energy-emitting characteristics of materials. Most (90% of typical applications) organic materials and painted or oxidized surfaces have an emissivity of 0.95.
Inaccurate readings will result from measuring shiny or polished metal surfaces. To compensate, cover the surface to be measured with masking tape or flat black paint. Allow time for the tape to reach the same temperature as the material underneath it. Measure the temperature of the tape or painted surface.

Measured Surfaces	Emissivity
Metal	
Aluminum: Oxidization	0.2-0.4
A3003 Alloy: Oxidization, Rough	0.3, 0.1-0.3
Brass: Burnishing, Oxidization	0.3, 0.5
Copper: Oxidization, Electric Terminal Board	0.4-0.8, 0.6
Hastelloy: Alloy	0.3-0.8
Inconel: Oxidization, Sand-Blasting, Electro Burnishing	0.7-0.95, 0.3-0.6, 0.15
Iron: Oxidization, Rusting	0.5-0.9, 0.5-0.7
Iron (Casting): Oxidization, Non-Oxidization, Casting	0.6-0.95, 0.2, 0.2-0.3
Iron (Forging): Passivation	0.9
Lead: Rough, Oxidization	0.4, 0.2-0.6
Molybdenum: Oxidization	0.2-0.6
Nickel: Oxidization	0.2-0.5
Platinum: Black	0.9

continued...

Measured Surfaces	Emissivity
Steel: Cold Rolling, Steel Plate-Burnishing, Steel Plate Rubbing	0.7-0.9, 0.4-0.6, 0.1
Zinc: Oxidization	0.1
Non-Metal	
Asbestos	0.95
Asphalt	0.95
Basalt	0.7
Carbon: Non-Oxidization, Graphite, Silicone Carbide	0.8-0.9, 0.7-0.8, 0.9
Ceramics	0.95
Clay	0.95
Concrete	0.95
Cloth	0.9
Glass: Convex, Smooth, Lead-Boron	0.76-0.8, 0.92-0.94, 0.78-0.82
Plates	0.96
Stone Products	0.93
Plaster	0.8-0.95
Ice	0.98
Limestone	0.98
Paper	0.95
Plastics	0.95
Water	0.93
Soil	0.9-0.98
Wood	0.9-0.95

Fault Diagnostics

Symptom	Problem	Action
"OL" appears on display when measuring	Measured value is greater than the maximum range	Stop measuring
"-OL" appears on display when measuring	Measured value is less than the minimum range	Stop measuring
Err appears when booting	Exceeding the minimum or maximum operating ambient temperature	Place the thermometer in a 0°C to 50°C(32°F to 122°F) environment and resume operation after 30 minutes
Low battery indicator flashes	Low battery	Replace the battery
Laser fails to work/ weak laser	Low battery	Replace the battery
Inaccurate measurement	Wrong emissivity setting, measured distance is too far, measured target diameter is less than 20mm, etc.	Verify field of view and the distance to spot of target

Product Care

To keep your instrument in good working order we recommend the following:

- Store your product in a clean, dry place.
- Change the battery as needed.
- If your instrument isn't being used for a period of one month or longer please remove the battery.
- Clean your product and accessories with biodegradable cleaner. Do not spray the cleaner directly on the instrument. Use on external parts only.

Product Warranty

REED Instruments guarantees this instrument to be free of defects in material or workmanship for a period of one (1) year from date of shipment. During the warranty period, REED Instruments will repair or replace, at no charge, products or parts of a product that proves to be defective because of improper material or workmanship, under normal use and maintenance. REED Instruments total liability is limited to repair or replacement of the product. REED Instruments shall not be liable for damages to goods, property, or persons due to improper use or through attempts to utilize the instrument under conditions which exceed the designed capabilities. In order to begin the warranty service process, please contact us by phone at 1-877-849-2127 or by email at info@reedinstruments.com to discuss the claim and determine the appropriate steps to process the warranty.

Product Disposal and Recycling

	Please follow local laws and regulations when disposing or recycling your instrument. Your product contains electronic components and must be disposed of separately from standard waste products.

Product Support

If you have any questions on your product, please contact your authorized REED distributor or REED Instruments Customer Service by phone at 1-877-849-2127 or by email at info@reedinstruments.com.

Please visit **www.REEDINSTRUMENTS.com** for the most up-to-date manuals, datasheets, product guides and software.

Product specifications subject to change without notice.
All rights reserved. Any unauthorized copying or reproduction of this manual is strictly prohibited without prior written permission from REED Instruments.

REED INSTRUMENTS

TEST & MEASURE WITH CONFIDENCE

CHECK OUT OUR LATEST PRODUCTS!

REED Instruments

1-877-849-2127 | info@reedinstruments.com | www.reedinstruments.com