PYRAMID PATIO HEATER
User’s manual

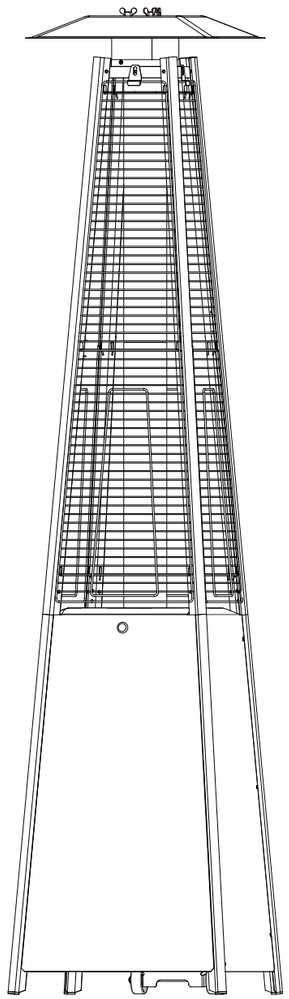

⚠ WARNING

PLEASE READ THE FOLLOWING SAFETY ADVICE PRIOR TO THE OPERATION OF THIS HEATER

If you smell gas:

1. Switch off the gas regulator.
2. Extinguish any open flame.
3. If the smell continues immediately call your gas supplier or your fire department.
4. Do not store or use flammable liquids in the vicinity of this heater.
5. Any gas cylinders not connected for use shall not be stored in the vicinity of this heater.

⚠ WARNING

For use outdoors or in areas that have ample ventilation.

An amply ventilated area must have a minimum of 25 % of the surface area open.

The surface area is the sum of the walls surface.

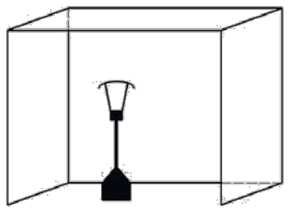

Improper installation, adjustment, alteration, service or maintenance can cause injury or property damage. Read the installation, operating and maintenance instructions thoroughly before installing or servicing this equipment.

⚠ WARNING

Read all of these instructions before installation and use.

- This appliance must be installed and the gas cylinder stored in accordance with LPG storage regulations.
- Do not obstruct the ventilation holes of the cylinder housing
- Do not move the heater when in operation.
- Switch off the gas regulator before moving the heater
- The rubber hose should be inspected and changed on a yearly basis.
- This heater is designed to be used with 11kg or 13kg patio/leisure propane gas cylinders

TABLE OF CONTENTS

Safety Precautions 4
Heater Stand and Location 6
Gas Requirements 6
Leak Test 7
Operation and Storage 8
Cleaning and Care 9
Parts and Specifications 9
Construction and Characteristics 10
Specification 10
Assembly Parts 11
Assembly Procedure 13
Troubleshooting 18

SAFETY PRECAUTIONS

Read the instructions before using this appliance. The appliance must be installed in accordance with the instructions.

- Do not use this patio heater indoors, as it may cause personal injury or property damage.
- This outdoor heater is not intended to be installed on recreational vehicles and/or boats. Installation and repair should be done by a qualified service person.
- Improper installation, adjustment, alteration can cause personal injury or property damage.
- Do not attempt to alter the unit in any manner.
- Never replace or substitute the regulator with any regulator other than the factory-suggested replacement.
- Do not store or use gasoline or other flammable vapors or liquids in the heater unit.
- The whole gas system, hose, regulator, pilot or burner should be inspected for leaks or damage before use, and at least annually by a qualified service person.
- All leak tests should be done with a soap solution. Never use an open flame to check for leaks. Do not use the heater until all connections have been leak tested.
- Turn off the gas valve immediately if smell of gas is detected. Turn Cylinder Valve OFF. If leak is at Hose/ Regulator connection: tighten connection and perform another leak test. If bubbles continue appearing should be returned to hose's place of purchase. If leak is at Regulator/Cylinder Valve connection: disconnect, reconnect, and perform another leak check. If you continue to see bubbles after several attempts, cylinder valve is defective and should be returned to cylinder's place of purchase.
- Do not transport heater while it's operating.
- Do not move the heater after it has been turned off until the temperature has cooled down. Keep the ventilation opening of the cylinder enclosure free and clear of debris.
- Do not paint the radiant screen, control panel or top canopy reflector.
- Control compartment, burner and circulation air passageways of the heater must be kept clean. Frequent cleaning may be required as necessary.
- The LP tank should be turned off when the heater is not in use. Check the heater immediately if any of the following occurs:

1. The heater does not reach temperature.
2. The burner makes a popping noise during use (a slight noise is normal when the burner is extinguished).
3. Smell of gas in conjunction with extreme yellow tipping of the burner flames.

- The gas regulator/hose assembly must be located out of pathways where people may trip over it or in areas where the hose will not be subject to accidental damage.
- Any guard or other protective device removed when servicing the heater must be replaced before operating the heater. Adults and children should stay away from high temperature surfaces to avoid burns or clothing ignition.
- Children should be carefully supervised when they are in the area of the heater.
- Clothing or other flammable materials should not be hung on the heater or placed on or near the heater.

- The gas cylinder should only be changed in a ventilated area, away from sources of ignition (candles, cigarettes, and other flame producing appliances)
- Do not obstruct the ventilation holes of the cylinder housing
- Switch off the gas tap after use when using red propane cylinders.
- Switch off the regulator after use when using green propane cylinders.
- In the event of gas leak, the appliance shall not be used or if alight, the gas regulator should be turned off immediately and the appliance should be inspected thoroughly before it is used again.
- Inspect the gas hose before every use. If it shows signs of cracking, splitting or other deterioration it should be replaced with new hose of the same length and of the equivalent quality.
- The use of this appliance in enclosed areas can be dangerous and is **PROHIBITED**.
- For connection of hose and regulator, and connection of regulator and hose, please refer to the photos shown below.

To assist connecting the regulator, carefully place the rubber hose into an insulated cup of boiling hot water. This allows the rubber hose to expand and allow the regulator to be connected easily. After connecting the regulator, tighten the hose clip with a screwdriver.

- This product contains small batteries. Swallowed small batteries can cause CHOCKING HAZARD. Seek immediate medical attention if batteries are swallowed or inhaled. Keep children away from the small batteries.

HEATER STAND AND LOCATION

- The heater is primarily for outdoor use only. Always ensure that adequate fresh air ventilation is provided.
- Always maintain proper clearance to non protected combustible materials i.e. top 100 cm and sides 100 cm minimum.

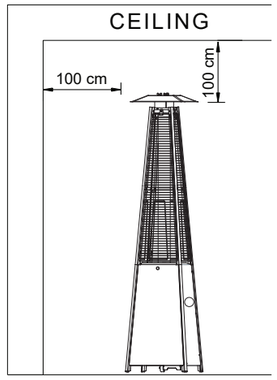

- Heater must be placed on level firm ground.
- Never operate heater in an explosive atmosphere like in areas where gasoline or other flammable liquids or vapors are stored.
- To protect heater from strong wind, anchor the base securely to the ground with screws.

Gas Requirements

- This heater is primarily designed to be used with propane gas.
- Butane gas may also be used with the appropriate regulator however butane freezes at zero degrees so will not be ideal to be used during cold temperatures.
- A dented, rusted or damaged cylinder may be hazardous and should be checked by your gas supplier before being used with this heater.
- Never connect an unregulated cylinder to the heater.

Leak Test

Gas hose connections on the heater are leak tested at the factory prior to shipment. A complete gas leak check must be performed at the installation site due to possible mishandling during the transit process.

⚠ WARNING

Leak testing: Do not smoke while performing this test, and remove all sources of ignition.

A full gas cylinder is required. This test must be done before initial use, annually and whenever any gas Components are replaced or serviced.

1. Mix a solution of water and washing up liquid, then pour onto the connection between the joints and connections of the regulator, hose, manifolds and valves. See Leak Testing Diagram below for areas to check. Turn all burner controls to the off position. Turn the gas regulator ON.

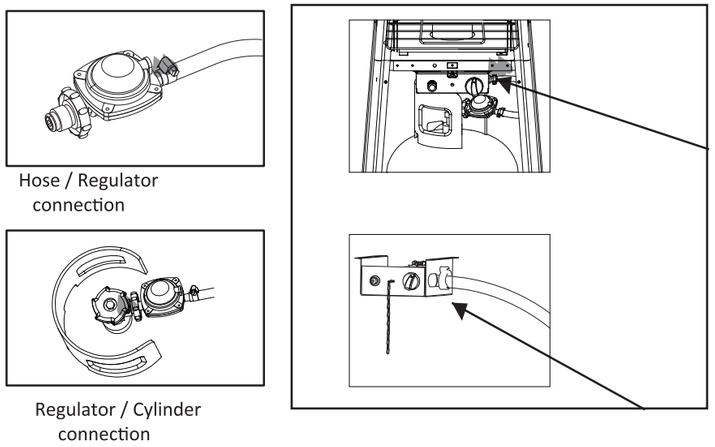

- **If no bubbles are present** - This indicates the connection is leak safe.
- **If bubbles are present** – Tighten the hose clip further and retest for leaks
- If bubbles continue to appear – **please contact your gas supplier or heater distributor**

2. If the leak cannot be stopped, immediately shut off the gas supply and disconnect it.
3. Do not use the patio heater until the leak has been corrected.

OPERATION AND STORAGE

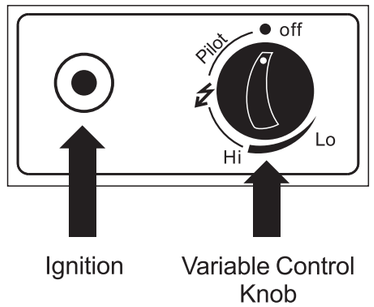

Off: the heater stop work
Hi: maximum temperature position
Lo: minimum temperature position

TO TURN THE HEATER ON

WARNING: Please ensure the glass tube has not been damaged before operation

1. Ensure the variable control knob is at the OFF position
2. Connect the gas regulator to a compatible gas cylinder
3. Push and turn the variable control knob to the "Pilot " position and hold for 60 seconds. Whilst still holding the control knob down, press the ignition button. A pilot flame should appear.
4. Once the blue pilot flame stays alight constantly, let go of the variable knob.
5. Turn the variable control knob to the desired temperature position – Lo to Hi

IMPORTANT NOTE

- When lighting the heater for the first time or a new cylinder is connected, the air inside the hose must be purged. This process will take a few minutes as liquefied petroleum gas is heavier than air
- As a result the variable control knob should be pressed down at the Pilot position for 3 Minutes instead of the normal 60 second period
- This ensures the gas purges the air in the hose and passes from the cylinder through to the main burner

TO TURN THE HEATER OFF

1. Turn the variable control to the PILOT position
2. Push and turn the variable control knob to the OFF position
3. Turn the regulator connected to the gas cylinder to the OFF position

STORAGE

- Always turn the regulator connected to gas cylinder OFF after use.
- Disconnect the regulator from the cylinder if the heater is not in use.
- Never store the gas cylinder indoors or without adequate air ventilation.

CLEANING AND CARE

- Wipe off surfaces with soft, moist cloth. Do not clean the heater with cleaning products that are combustible or corrosive.
- Remove debris and insects from the burner periodically to keep it clean and safe for use.
- Cover the burner unit with the optional protective cover when the heater is not in use.

PARTS AND SPECIFICATION

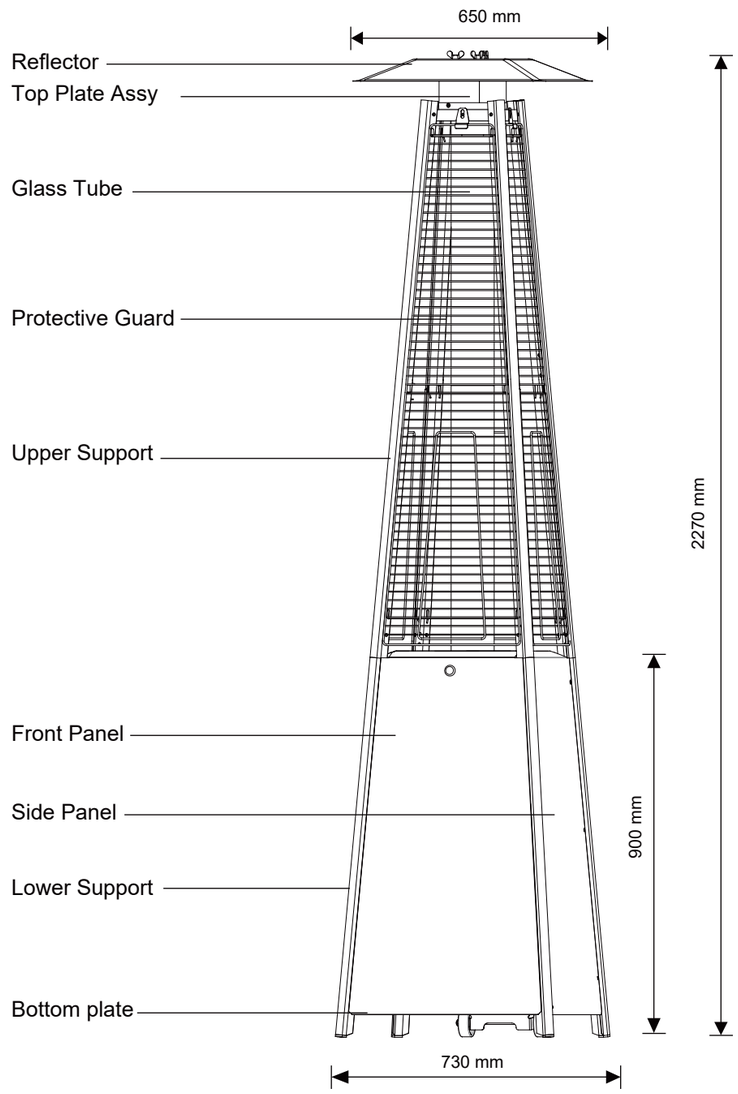

CONSTRUCTION AND CHARACTERISTICS

- Transportable terrace/garden heater with cylinder housing.
- Constructed with aluminium, powder coated and stainless steel
- Heat is emitted upwards through the glass tube and distributed via the top reflector.

SPECIFICATIONS

- This heater is best used with propane gas
- Max. wattage: 13kw
- Min. wattage: 5kw

Gas Consumption

APPLIANCE CATEGORY:	I 3+(28-30/37)		I3B/P(30)	I3B/P(50)	I3B/P(37)
TYPES OF GAS:	Butane	Propane	Butane, propane or their mixtures	Butane, propane or their mixtures	Butane, propane or their mixtures
GAS PRESSURE:	28-30mbar	37 mbar	30 mbar	50mbar	37mbar
OUTLET PRESSURE OF REGULATOR:	30mbar	37 mbar	30 mbar	50mbar	37mbar

Use the correct regulator according to outlet pressure of regulator as showed in the table above.

Injector Information

APPLIANCE CATEGORY:	I 3+(28-30/37)		I3B/P(30)	I3B/P(50)	I3B/P(37)
TYPES OF GAS:	Butane	Propane	Butane, propane or their mixtures	Butane, propane or their mixtures	Butane, propane or their mixtures
GAS PRESSURE:	28-30mbar	37 mbar	30 mbar	50mbar	37mbar
TOTAL HEAT INPUT (Hs): (Qn)	13kW (945g/h)				
INJECTOR SIZE:	1.88 mm for main burner 0.18 mm for pilot burner			1.55 mm for main burner 0.18mm for pilot burner	1.65 mm for main burner 0.18mm for pilot burner
The marking， for example， 1.88 on the injector，indicates that the size of injector is 1.88mm					

- The hose and regulator assembly must conform to adequate standards.
- Regulator outlet pressure should meet the corresponding appliance category in the Specification section above. The appliance requires approved hose with a minimum length of 0.5 m.

ASSEMBLY PARTS

Tools needed:

- Philips screwdriver w/ medium blade
- Spray bottle of soap solution for leakage test

Parts List:

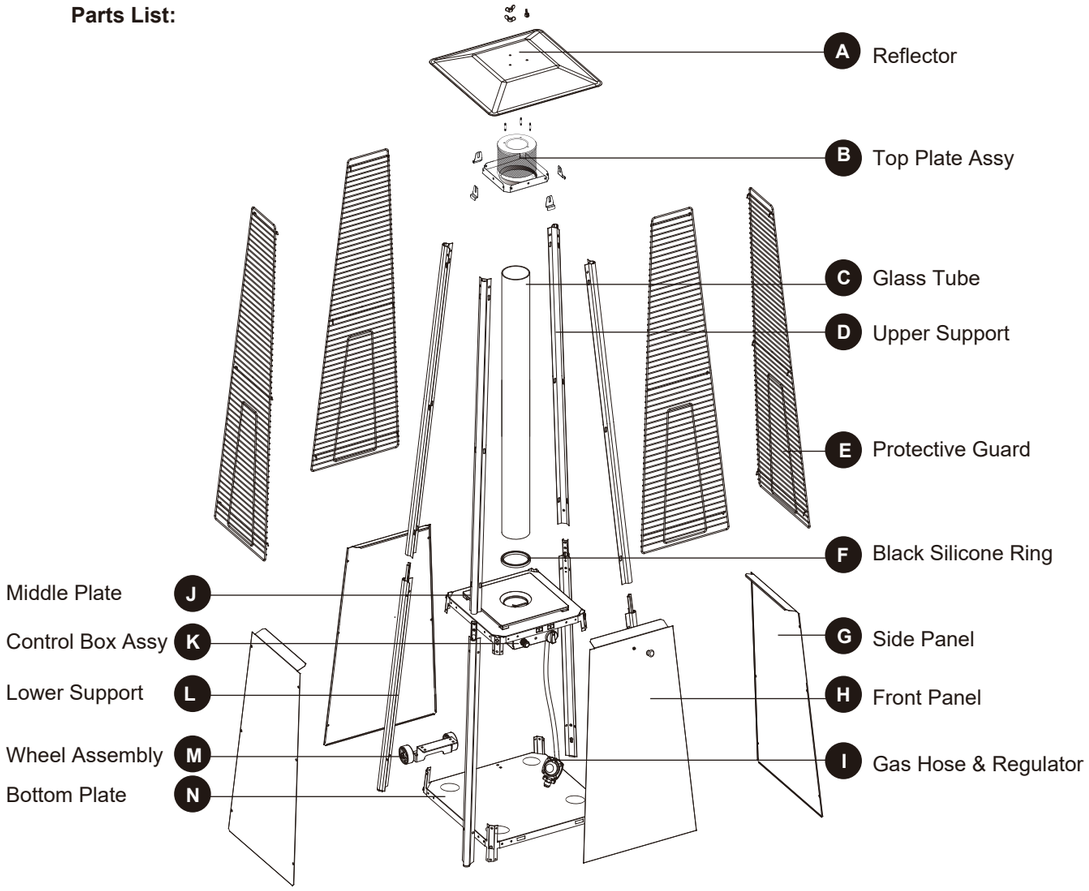

PART	DESCRIPTION	QUANTITY
A	Reflector	1
B	Top Plate Assy	1
C	Glass Tube	1
D	Upper Support	4
E	Protective Guard	4
F	Black Silicone Ring	1
G	Side Panel	3
H	Front Panel	1
I	Gas Hose & Regulator	1
J	Middle Plate	1
K	Control Box Assy	1

PART	DESCRIPTION	QUANTITY
L	Lower Support	4
M	Wheel Assembly	1
N	Bottom Plate	1

Hardware Contents

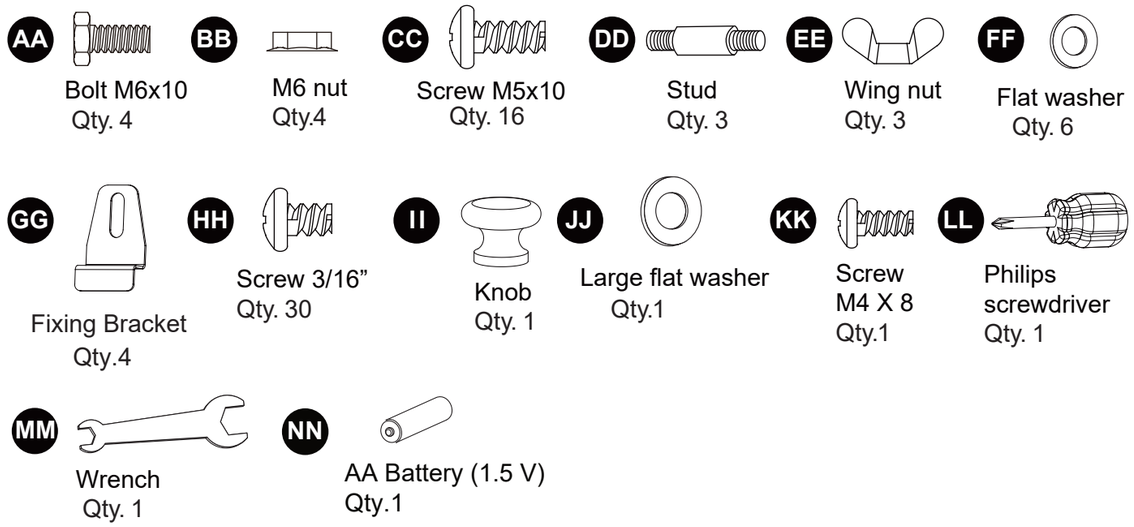

Assembly Procedure

1.Assemble the wheel assembly (M) to the bottom plate (N) using 4pcs bolt M6x10 (AA) and 4pcs M6 nut (BB).

Hardware Used

AA	Bolt M6x10		x 4
BB	M6 nut		x 4

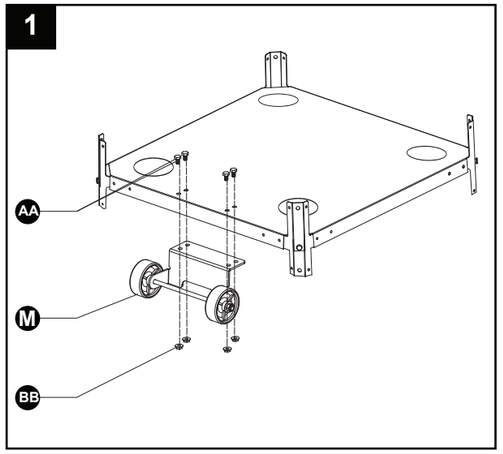

2-1. Unscrew the ignition, load small battery, tighten the ignition.

2-2. Insert the pins of the bottom plate (N) to the holes of lower support (L), press to secure the pins. using 4pcs screw M5x10 to secure the bottom plate and lower support.
Insert the pins of the control box assy (K) to the holes of lower support (L), press to secure the pins. using 4pcs screw M5x10 to secure the lower support and control box assy.

Hardware Used

CC	screw M5x10		x 8

ATTENTION:
Ensure control box and front panel are on opposite side to wheels.

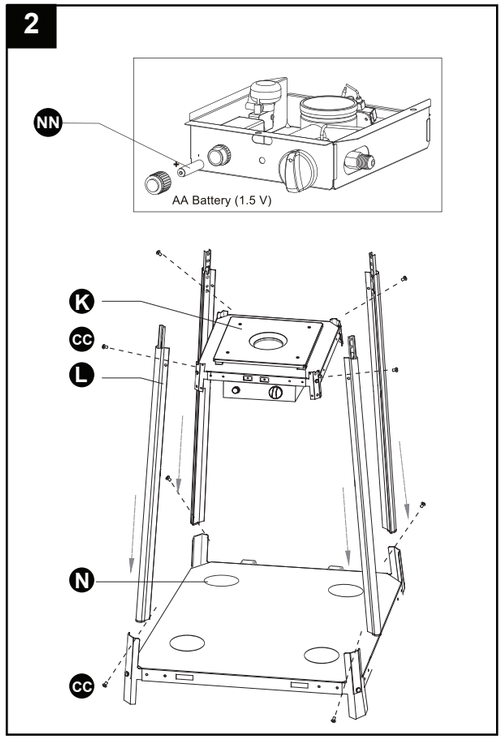

3. Insert upper support (D) to lower support (L) using 8pcs screw M5x10.
Assemble top plate assy (B) to upper support (D) using 8pcs screw 3/16”.

Hardware Used

CC	screw M5x10		x 8
HH	Screw 3/16”		x 8

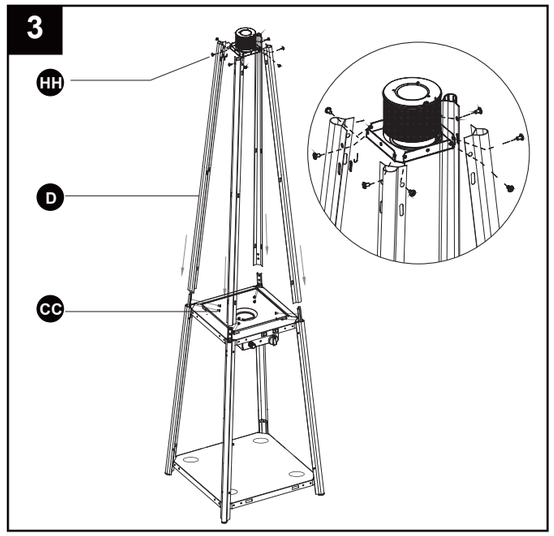

4. Assemble the reflector (A) onto the top plate assy (B).
Screw the 3pcs stud (DD) on the top plate assy (B), put 3pcs flat washer (FF) onto the top of stud (DD), then put the reflector on the the stud (DD), secure them with 3pcs flat washer (FF) and 3pcs wing nut (EE).

Hardware Used

EE	Wing nut		x 3
DD	Stud		x 3
FF	Flat washer		x 6

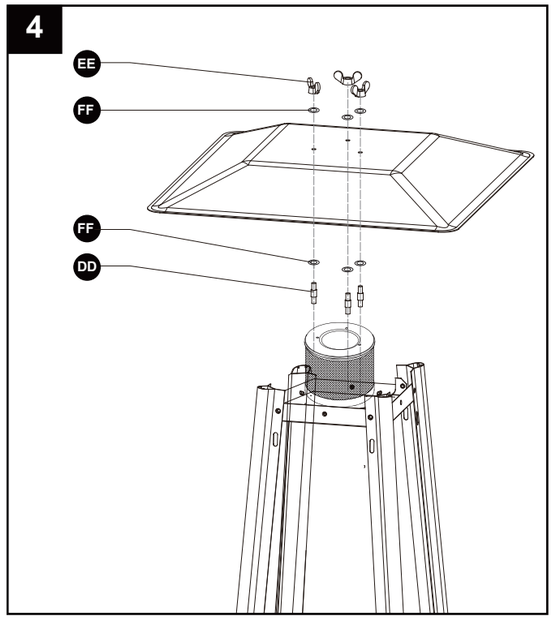

5. Carefully install the glass tube (C) by lifting up and inserting through the center hole in the top plate assy (B). Ensure the black silicone ring (F) is attached to the lower edge of the glass tube (C) as illustrated. Slide the glass tube (C) through the hole of the lower plate cover and onto the middle plate (J). Check and ensure that the glass tube (C) is positioned properly and is completely covering the center hole of the middle plate(J).

WARNING! The black silicone ring must be in place prior to operating the heater.

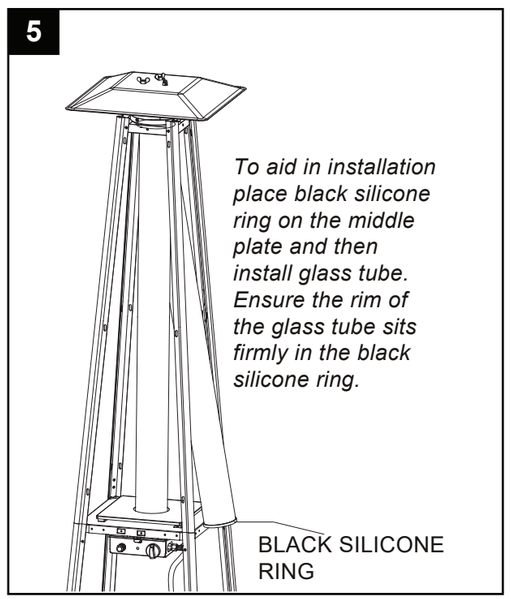

6.Assembly the protective guard (E).
Hang the hooks of the protective guard (E) onto the holes in supports
Secure the protective guards (E) with fixing brackets (GG) with 4pcs screw Screw 3/16" (HH).

Hardware Used

HH	Screw 3/16"		x 4
GG	Fixing Bracket		x 4

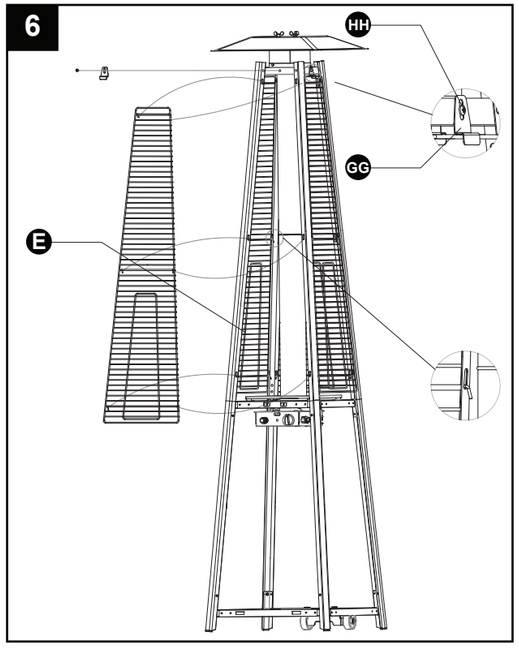

7. Assemble three side panels (G) to heater using 18pcs screw 3/16".

Attention:
Do not cover the front side where the control knob is.

Hardware Used

HH	Screw 3/16"		x 18

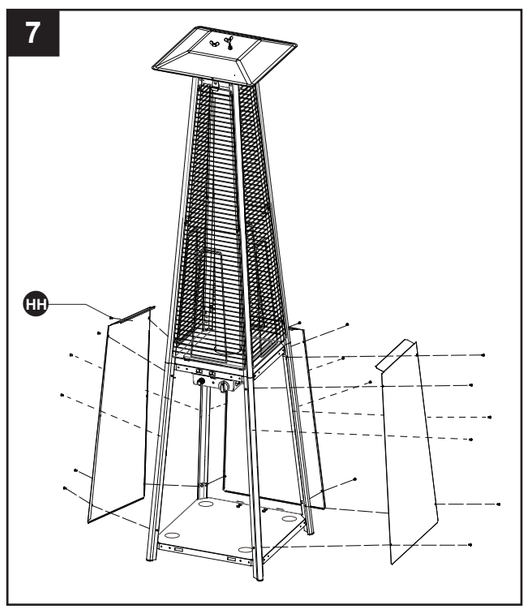

8.Install the knob (II) to screw M4x8 (KK) and large flat washer (JJ).
Put the pothook of front panel (H) to the holes of bottom plate (N).

Hardware Used

II	Knob		x 1
KK	Screw M4 X 8		x 1
JJ	Large flat washer		x 1

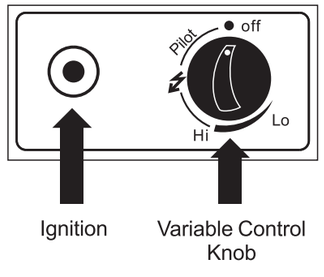

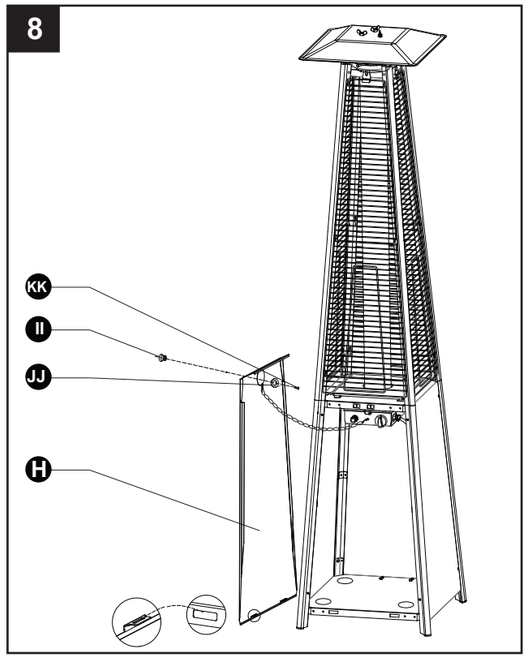

ATTENTION: Please unscrew Igniton to put in battery.

9. Propane Only-Proper Hose Connection.

WARNING! Ensure the hose does not contact any high temperature surfaces, or it may melt and leak causing a fire.

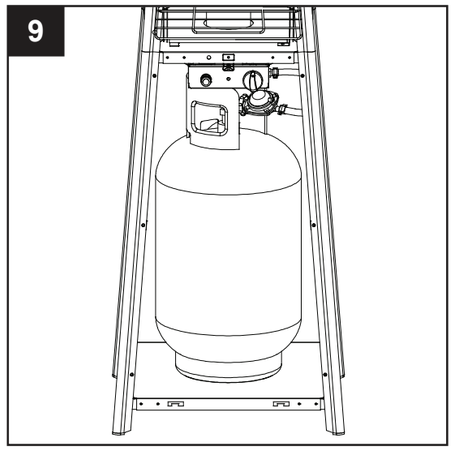

10. Leak Check.

WARNING! A leak test must be performed annually and each time a cylinder is hooked up or if a part of the gas system is replaced.

WARNING! Never use an open flame to check for gas leaks. Be certain no sparks or open flames are in the area while you check for leaks. Sparks or open flames will result in a fire or explosion, damage to property, serious bodily injury, or death.

Leak testing: This must be done before initial use, annually,and whenever any gas Components are replaced or serviced. Do not smoke while performing this test, and remove all sources of ignition. See Leak Testing Diagram for areas to check. Turn all burner controls to the off position. Turn gas supply valve on.

Brush a half-and-half solution of liquid soap and water onto all joints and connections of the regulator, hose, manifolds and valves.

Bubbles will indicate a gas leak. Either tighten the loose joint or have the part replaced with one recommended by the Customer Care department and have the patio heater inspected by a certified gas installer.

If the leak cannot be stopped, **immediately shut off the gas supply,** disconnect it,and have the patio heater inspected by a certified gas installer or dealer. Do not use the patio heater until the leak has been corrected.

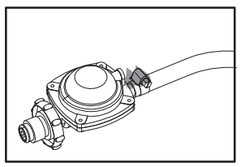

Hose / Regulator connection

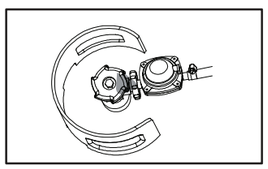

Regulator / Cylinder connection

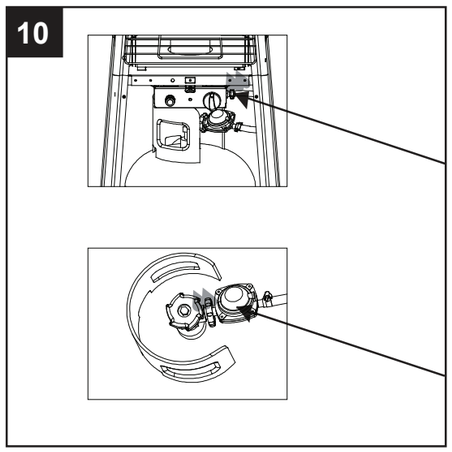

LEAK TEST

Please ensure you follow the procedure on page 7 before operating the heater.

TROUBLESHOOTING

Problem	Probable Cause	Suggested Solution
Pilot will not light	Gas regulator may be OFF	Turn the regulator ON
	Gas cylinder empty	Replace with full cylinder
	Opening blocked	Clean or replace opening
	Air in supply system	Purge air from lines
	Loose connections	Check all fittings
Pilot will not stay on	Debris around pilot	Clean dirty area
	Loose connections	Tighten connections
	Thermocouple faulty	Replace thermocouple
	Anti tilt switch loose/faulty	Reconnect/replace anti tilt switch
	Gas leak in line	Check connections
	Lack of fuel pressure	Tank near empty. Refill LPG tank.
Burner will not light	Pressure is low	Cylinder is almost empty. Replace with full cylinder
	Opening blocked	Remove and clean
	Control not ON	Turn valve to ON
	Thermocouple faulty	Replace thermocouple
	Pilot light assembly bent	Place pilot properly
	Not in correct location	Position properly and retry

If you have any other issues, please contact your supplier or distributor. Please do not attempt to modify the heater in any way or form.