FEIT ELECTRIC

Model: FP1X4/SKY/5CCT/WH

1X4 LED SKYLIGHT FLAT PANEL FIXTURE WITH SELECTABLE COLOR TEMPERATURES

IMPORTANT SAFETY INSTRUCTIONS AND INSTALLATION GUIDE

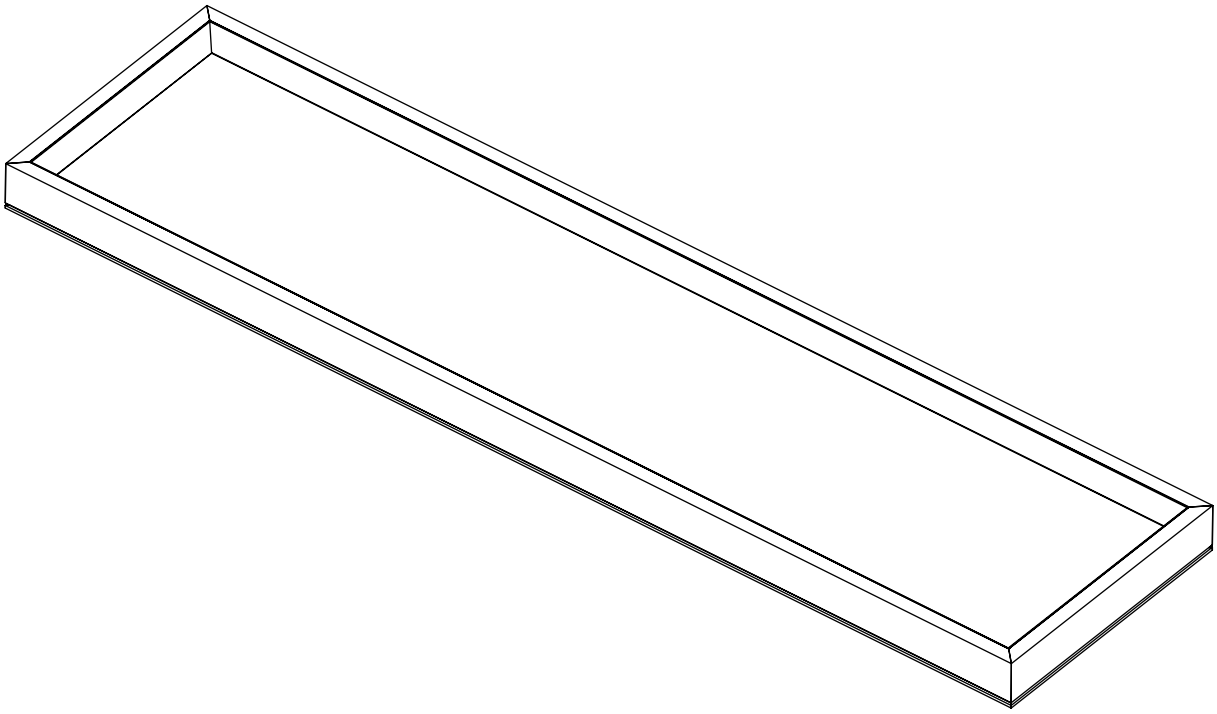

READ BEFORE INSTALLATION
SAVE THESE INSTRUCTIONS

24/7 HELP

We appreciate the trust and confidence you have placed in Feit Electric through the purchase of this product. We strive to continually create quality products designed to enhance your home. Visit us online to see our full line of products available for your home improvement needs. Thank you for choosing Feit Electric.

Table of Contents

Safety Information 2
FCC Statement 2
Warranty 2
Pre-Assembly 3
Installation 4-5
Operating the Fixture 6
Changing the Color Settings 6

Safety Information

For your safety, always remember to:

- ☐ **Turn off the power supply at the fuse or circuit breaker box before you install the fixture.**
- ☐ **Ground the fixture to avoid potential electric shock and to ensure reliable starting.**
- ☐ **Double-check all connections to be sure they are tight and correct.**
- ☐ **Wear rubber soled shoes and work on a sturdy wooden ladder.**
- ☐ **Account for small parts and destroy packing material, as these may be hazardous to children.**

This fixture is designed for use in a circuit protected by a fuse or circuit breaker. It is also designed to be installed in accordance with local electrical codes. If you are unsure about your wiring, consult a qualified electrician or local electrical inspector, and check your local electrical code.

NOTICE: All electrical connections must be in accordance with local and National Electrical Code (N.E.C.) standards. If you are unfamiliar with proper electrical wiring connections obtain the services of a qualified electrician.

Remove the fixture and the mounting package from the box and make sure that no parts are missing by referencing the illustrations on the installation instructions.

Product Specifications:
- **120VAC, 70W, 60Hz**
- **Wall Dimmable**
- **Suitable for Damp Location**
- **Intended to be mounted on the ceiling or wall surface**

WARNING: RISK OF SHOCK. House electric current can cause painful shock or serious injury unless handled properly.

CAUTION: Turn off the main power at the circuit breaker before installing the fixture, in order to prevent possible shock.

WARNING: RISK OF FIRE. Before installing your lighting fixture, thoroughly review this installation manual. If you do not have sufficient electrical wiring experience have your fixture installed by a certified electrician. All electrical connections must be in accordance with Local and National Electrical Code (NEC) Standards. Reliable operating temperature is -13˚F to 113˚F / -25˚C to 45˚C. Suitable for Damp Locations. For more information including dimmer compatibility visit www.feit.com.

SUITABLE FOR OPERATION IN AMBIENT NOT EXCEEDING 45°C

FCC STATEMENT

Supplier's Declaration of Conformity:
47 CFR § 2.1077 Compliance Information
Responsible Party: Feit Electric Company
4901 Gregg Road, Pico Rivera, CA 90660, USA
www.feit.com
Unique Identifier: FP1X4/SKY/5CCT/WH

This device complies with part 15 of the FCC Rules. Operation is subject to the following two conditions: (1) This device may not cause harmful interference, and (2) this device must accept any interference received, including interference that may cause undesired operation. Note: This equipment has been tested and found to comply with the limits for a Class B digital device, pursuant to part 15 of the FCC Rules. These limits are designed to provide reasonable protection against harmful interference in a residential installation. This equipment generates, uses and can radiate radio frequency energy and, if not installed and used in accordance with the instructions, may cause harmful interference to radio communications. However, there is no guarantee that interference will not occur in a particular installation. If this equipment does cause harmful interference to radio or television reception, which can be determined by turning the equipment off and on, the user is encouraged to try to correct the interference by one or more of the following measures: Reorient or relocate the receiving antenna. Increase the separation between the equipment and receiver. Connect the equipment into an outlet on a circuit different from that to which the receiver is connected. Consult the dealer or an experienced radio/TV technician for help. Any changes or modifications not expressly approved by the manufacturer could void the user's authority to operate the equipment.

Limited Warranty

This product is warrantied to be free from defects in workmanship and materials for up to 3 years from date of purchase. If the product fails within the warranty period, please contact Feit Electric at info@feit.com or visit feit.com/contact-us for instructions on replacement or refund. REPLACEMENT OR REFUND IS YOUR SOLE REMEDY. EXCEPT TO THE EXTENT PROHIBITED BY APPLICABLE LAW, ANY IMPLIED WARRANTIES ARE LIMITED IN DURATION TO THE DURATION OF THIS WARRANTY. LIABILITY FOR INCIDENTAL OR CONSEQUENTIAL DAMAGES IS HEREBY EXPRESSLY EXCLUDED. Some states and provinces do not allow the exclusion of incidental or consequential damages, so the above limitation or exclusion may not apply to you. This warranty gives you specific legal rights, and you may also have other rights which vary from state to state or province to province.

TOOLS REQUIRED (NOT INCLUDED)



Phillips
Screwdriver

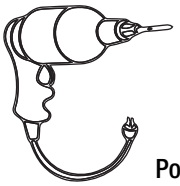

Power drill



1/2 in. Drill Bit

HARDWARE INCLUDED

NOTE: Hardware not shown to actual size.



AA



BB



CC



DD

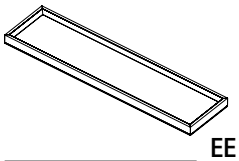

EE

Part	Description	Quantity
AA	Mounting Plate (25.6 in. x 9.8 in. x 0.47 in.)	1
BB	3/16 in. Bolts	4
CC	Wire Nuts	3
DD	Screws #8-32 x 1 in.	2
EE	LED Flat Panel	1

1 Turning off the Power

□ Turn the power OFF at the switch, fusebox, or the circuit breaker.

2 Identifying the Wires

Black - Hot/Live
White - Neutral
Green or Bare Copper - Ground

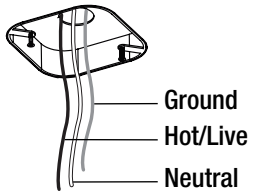

3 Attaching the Mounting Plate

□ Remove the mounting plate (AA) from the fixture and attach it to the junction box using the two #8-32 x 1 in. screws (DD). Align the mounting plate in the direction you want the fixture to be aligned. Once the toggle bolts are installed, you cannot change the orientation.

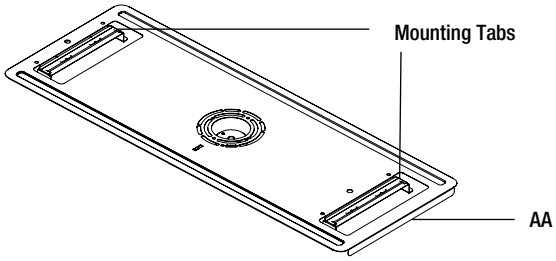

4 Positioning the Toggle Bolts

□ Using the mounting plate (AA) as a guide, mark the position of the holes on the ceiling or wall where the toggle bolts will be placed.

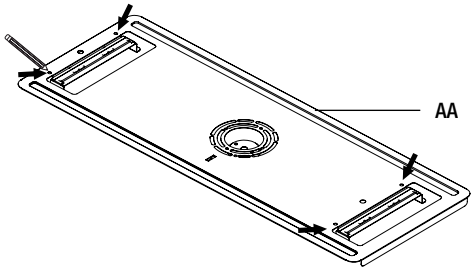

5 Securing the Toggle Bolts

□ Remove the mounting plate (AA) from the junction box. Drill the marked locations using a 1/2 in. drill bit. Remove the wings from the 3/16 in. toggle bolts (BB). Insert a screw (BB) through the front of the mounting plate (AA) and reattach the wing to the screw (BB). Repeat for all toggle bolts.

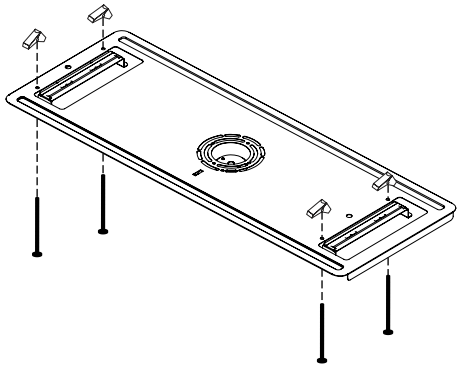

6 Re-attaching the Mounting Plate

□ Feed the junction box wires through the center of the mounting plate (AA) hole. Re-attach the mounting plate (AA) by inserting the toggle bolts (BB) into the drilled holes. Once the wings (BB) are through and expanded, pull the toggle bolts (BB) downward to engage and tighten.

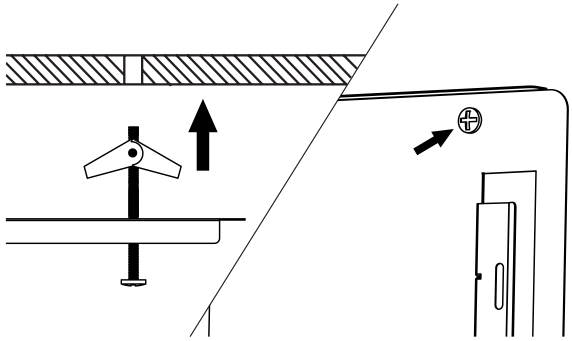

7 Connecting the Fixture

□ Hook the support wire from the fixture (EE) on the mounting plate (AA).

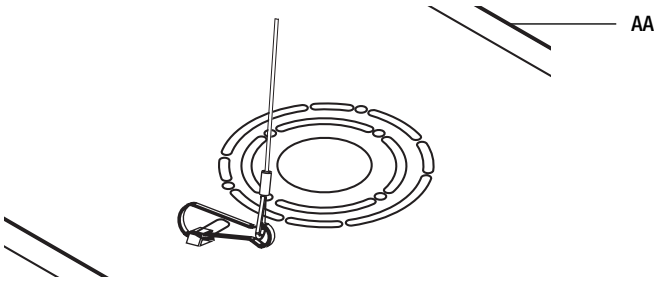

Please contact feit.com/help for further assistance.

8 Installing the Fixture

- □ Connect the three wires coming from the fixture (EE) to the junction box wires (black - line voltage, white - neutral and green - ground).

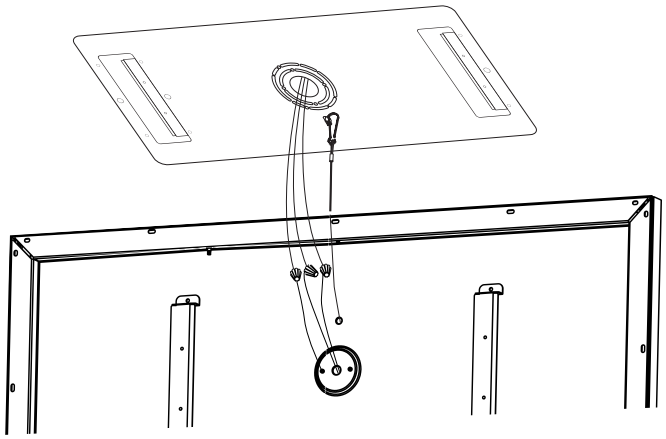

NOTE: Before attaching the fixture, select the preferred color temperature on the back of the fixture. See “Changing Color Settings” for details.

9 Connecting the Swing Arms

- □ Insert the swing arm’s key hole slot into the mounting fixture (EE) plate’s hanging screw.

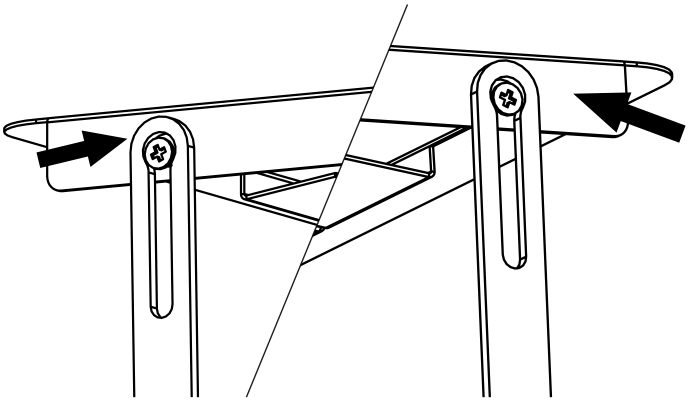

10 Attaching the Fixture

- □ Feed the junction box and fixture (EE) wires through the mounting plate’s center hole.
- □ Raise the fixture (EE) to the direction of the arrow on the swing arm.

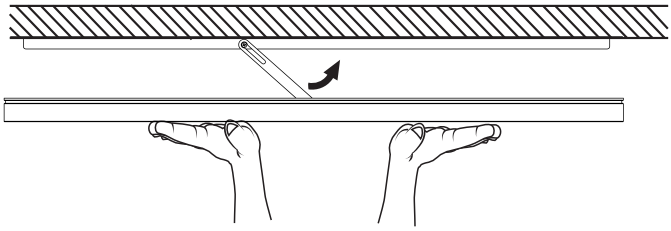

11 Securing the Fixture

- □ Once the fixture (EE) has been raised and is flush to the ceiling, lock the fixture (EE) by moving it towards the opposite direction it was raised (as shown on the fixture label).

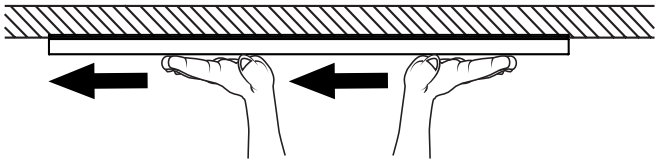

12 Turning on the Power

- □ Turn on the fusebox or circuit breaker and the power at the wall switch.

Operating the Fixture

- Flip the wall switch ON after Installation to enter Mode 1: Skylight.
- Flip the wall switch OFF and back ON in less than 3 seconds to enter the Mode 2: White light.
  - The color temperature of the white light in Mode 2 can be selected with the switch on the back of fixture. This will affect the color temperature of the white light only in Mode 2. See "Changing the Color Settings" section.
- Flip the wall switch OFF and back ON again in less than 3 seconds to enter Mode 3: Blue light.

NOTE: If the unit is turned off for more than 10 seconds, the mode will automatically revert to the default mode of Mode 1 (Skylight).

Changing the Color Settings

- Must be in Mode 2 (White light) to select the desired color temperature.

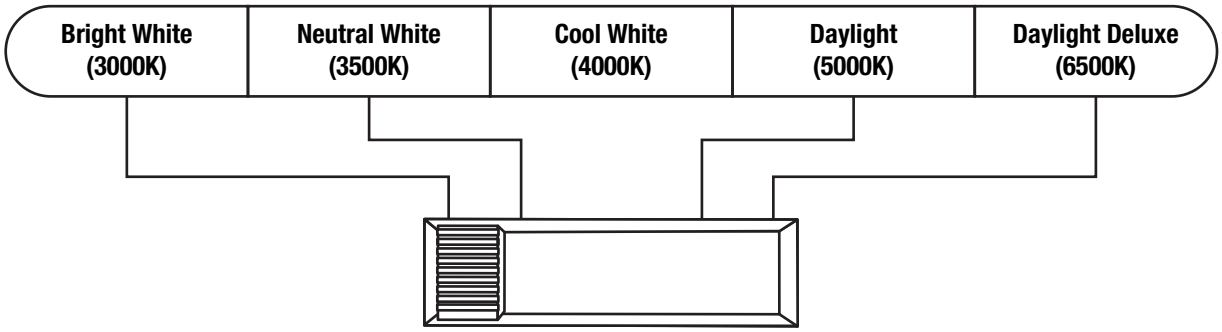

When the slide switch is set to 3000K, the color temperature is set to Bright White.
When the slide switch is set to 3500K, the color temperature is set to Neutral White.
When the slide switch is set to 4000K, the color temperature is set to Cool White.
When the slide switch is set to 5000K, the color temperature is set to Daylight.
When the slide switch is set to 6500K, the color temperature is set to Daylight Deluxe.

NOTE: The color temperature is pre-set to 4000K.

Need Help?

24/7 HELP

Thank you for your purchase.
Questions, comments or feedback?
We'd love to hear from you.
Visit **feit.com/help** for support or connect with us:

@FeitElectric @FeitElectricInc feitelectriclighting

Please contact feit.com/help for further assistance.