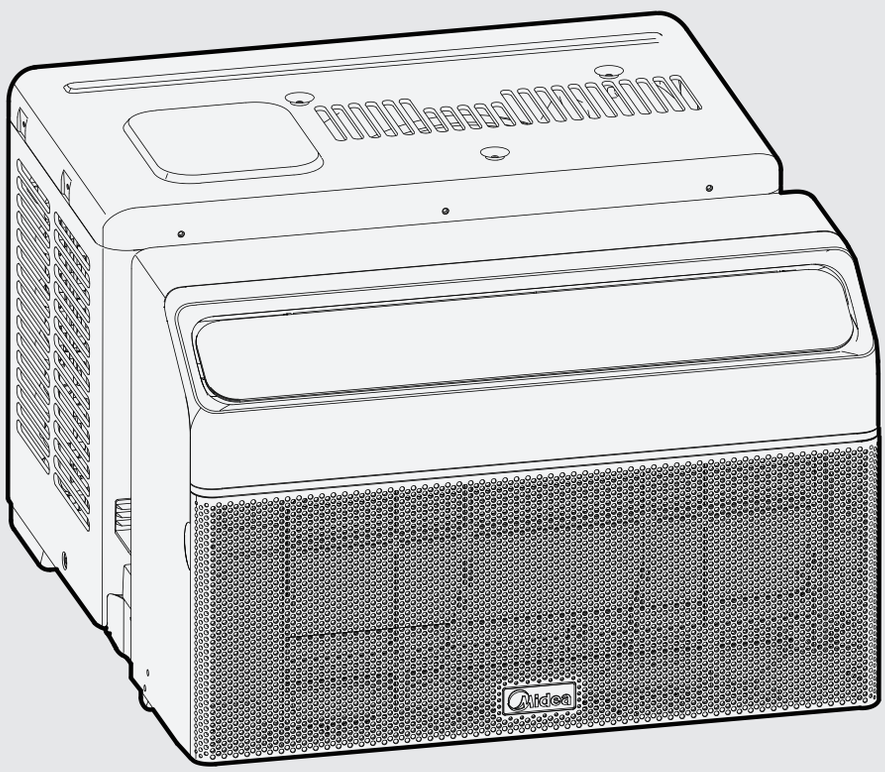

Window Air Conditioner

SmartHome
Download the app & activate product

Download on the App Store

GET IT ON Google Play

USER MANUAL

MAW06U1QWT
MAW08U1QWT
MAW10U1QWT
MAW12U1QWT

Warning notices: Before using this product, please read this manual carefully and keep it for future reference.
The design and specifications are subject to change without prior notice for product improvement.
Consult with your dealer or manufacturer for details.
The diagram above is just for reference. Please take the appearance of the actual product as the standard.

CONTENTS

Safety precautions 01

Installation instructions

Unit parts identification 12

Install AC Support bracket and AC 14

Normal Sounds 18

Operating instructions

Get to know the features 20

App Setup and Operation 28

Cleaning, Maintenance, and Storage 36

Troubleshooting 39

Warranty 41

Safety Precautions

Inside you will find many helpful hints on how to use and maintain your air conditioner properly. Just a little preventive care on your part can save you a great deal of time and money over the life of your air conditioner. You'll find many answers to common problems in the chart of troubleshooting tips. If you review our chart of Troubleshooting Tips first, you may not need to call for service at all.

It's really important you read safety precautions before operation and Installation Incorrect installation due to ignoring instructions can cause serious damage or injury. The seriousness of potential damage or injuries is classified as either a WARNING or CAUTION.

Explanation of Symbols

WARNING
The signal word indicates a hazard with a medium level of risk which, if not avoided, may result in death or serious injury.

CAUTION
The signal word indicates a hazard with a low degree of risk which, if not avoided, may result in minor or moderate injury.

Read these operating instructions carefully and attentively before using/commissioning the unit and keep them in the immediate vicinity of the installation site or unit for later use!

⚠ WARNING

- Plug in power plug properly. Otherwise, it may cause electric shock or fire due to excess heat generation.
- Do not operate or stop the unit by inserting or pulling out the power plug. It may cause electric shock or fire due to heat generation.
- Do not damage or use an unspecified power cord. It may cause electric shock or fire. If the power cord is damaged, it must be replaced by the manufacturer or an authorized service center or a similarly qualified person in order to avoid a hazard.
- Always ensure effective grounding. Incorrect grounding may cause electric shock.
- Do not operate with wet hands or in damp environment. It may cause electric shock.
- Do not allow water to run into electric parts. It may cause failure of machine of electric shock.
- Do not modify power cord length. It may cause electric shock or fire due to heat generation.
- Do not use the socket if it is loose or damaged. It may cause fire and electric shock.
- Unplug the unit if strange sounds, smell, or smoke comes from it. It may cause fire and electric shock.
- Do not disassemble or modify unit. It may cause failure and electric shock.
- Do not open the unit during operation. It may cause electric shock.

⚠ WARNING

- In North America, installation must be performed in accordance with the requirement of NEC and CEC by authorized personnel only).
- Always install circuit breaker and a dedicated power circuit. Incorrect installation may cause fire and electric shock.
- Do not direct airflow at room occupants only. This could damage your health.
- Do not use the power cord near flammable gas or combustibles, such as gasoline, benzene, thinner, etc. It may cause an explosion or fire.
  Keep firearms away. It may cause fire.
- Do not use the power cord close to heating appliances. It may cause fire and electric shock.
- Ventilate room before operating air conditioner if there is a gas leakage from another appliance. It may cause explosion, fire and, burns.

⚠ CAUTION

- This appliance is not intended for use by people (including children) with reduced physical, sensory, or mental capabilities or lack of experience and knowledge, unless they have been given supervision or instruction concerning use of the appliance by a person responsible for their safety.
- Children should be supervised to ensure that they do not play with the appliance.
- If the power cord is damaged, it must be replaced by the manufacturer, its service agent, or similarly qualified person in order to avoid a hazard.
- The appliance shall be installed in accordance with national wiring regulations.
- Do not operate your air conditioner in a wet room such as a bathroom or laundry room.
- The appliance with electric heater shall have at least 1 meter of space to the nearest combustible material.
- Contact the authorized service technician for repair or maintenance of this unit.
- When the air filter is to be removed, do not touch the metal parts of the unit. It may cause an injury.
- Do not put a pet or house plant where it will be exposed to direct air flow. This could injure the pet or plant.
- Ventilate the room well when used together with a stove, etc. An oxygen shortage may occur.
- Do not use strong detergent such as wax or thinner but use a soft cloth. Appearance may be deteriorated due to change of product color or scratching of its surface.
- Do not clean the air conditioner with water. Water may enter the unit and degrade the insulation. It may cause an electric shock.
- Do not use for special purposes. Do not use this air conditioner to preserve precision devices, food, pets, plants, and art objects. It may cause deterioration of quality, etc.
- Stop operation and close the window in storm or hurricane. Operation with windows opened may cause wetting of indoor and soaking of household furniture.
- When the unit is to be cleaned, switch off, and turn off the circuit breaker. Do not clean unit when power is on as it may cause fire and electric shock, it may cause an injury.
- Ensure that the installation bracket of the outdoor appliance is not damaged due to prolonged exposure. If bracket is damaged, there is concern of damage due to falling of unit.
- Always insert the filters securely. Clean filter once every two weeks. Operation without filters may cause failure.
- Do not place obstacles around air-inlets or inside of air-outlet. It may cause failure of appliance or accident.
- Hold the plug by the head of the power plug when taking it out. It may cause electric shock and damage.

⚠ CAUTION

- Do not place heavy object on the power cord and ensure that the cord is not compressed. There is danger of fire or electric shock.
- Turn off the main power switch when not using the unit for a long time. It may cause failure of product or fire.
- Do not drink water drained from air conditioner. It contains contaminants and could make you sick.
- Use caution when unpacking and installing. Sharp edges could cause injury.
- If water enters the unit, turn the unit off at the power outlet and switch off the circuit breaker. Isolate supply by taking the power-plug out and contact a qualified service technician.

NOTE

The power supply cord with this air conditioner contains a current detection device designed to reduce the risk of fire. Please refer to the section Operation of Current Device for details. In the event that the power cord is damaged, it cannot be repaired – it must be replaced with a cord from the product manufacturer.

⚠ WARNING

Avoid fire hazard or electric shock. Do not use an extension cord or an adapter plug. Do not remove any prongs from the power cord.

Grounding type wall receptacle

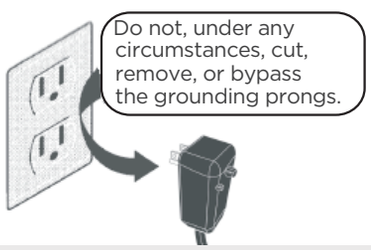

Power supply cord with 3-prong grounding plug and current detection device.

⚠ For Your Safety

Do not store or use gasoline or other flammable vapors and liquids in the vicinity of this or any other appliance.

⚠ WARNING

Prevent Accidents

To reduce the risk of fire, electrical shock, or injury when using your air conditioner, follow basic precautions, including the following:

- Be sure the electrical service is adequate for the model you have chosen. This information can be found on the serial plate, which is located on the side of the cabinet and behind the grille.
- It is recommended to clean both sides of the window glass first. If the window has a screen panel included on the lower portion, the screen panel should be removed before installation.
- Be sure the air conditioner has been securely and correctly installed according to the installation instructions in this manual. Save this manual for possible future use in removing or installing this unit.
- When handling the air conditioner, be careful to avoid cuts from the sharp metal fins on the front and rear coils.

⚠ WARNING

Electrical Information

The complete electrical rating of your new room air conditioner is stated on the serial plate. Refer to the rating when checking the electrical requirements.

- Be sure the air conditioner is properly grounded. To minimize shock and fire hazards, proper grounding is important. The power cord is equipped with a three-prong grounding plug for protection against shock hazards.
- Your air conditioner must be used in a properly grounded wall receptacle. If the wall receptacle you intend to use is not adequately grounded or protected by a time delay fuse or circuit breaker, have a qualified electrician install the proper receptacle. Ensure the receptacle is accessible after the unit installation.
- Do not run air conditioner without side protective cover in place. This could result in mechanical damage within the air conditioner.
- Do not use an extension cord or an adapter plug.

Operation of Current Device
(Applicable to only units with a current detection device)

The power supply cord contains a current device that senses damage to the power cord. To test your power supply cord do the following:

1. Plug in the Air Conditioner.
2. The power supply cord will have TWO buttons on the plug head. Press the TEST button, you will notice a click as the RESET button pops out.
3. Press the RESET button, again you will notice a click as the button engages.
4. The power supply cord is now supplying electricity to the unit. On some products, this is also indicated by a light on the plug head.

NOTICE

- Do not use this device to turn the unit on or off.
- Always make sure the RESET button is pushed in for correct operation.
- The power supply cord must be replaced if it fails to reset when either the TEST button is pushed or if it cannot be reset. A new one can be obtained from the product manufacturer.
- If power supply cord is damaged, it cannot be repaired. It MUST be replaced by one obtained from the product manufacturer.
  NOTE: This air conditioner cannot be as a primary heat source; this air conditioner is designed to be operated under the following conditions:

Cooling operation	Outdoor temp:	64-109°F/18-43°C (64-125°F/18-52°C for special tropical models)
	Indoor temp:	60-90°F/16-32°C

• The relative humidity of the room should be less than 80%. If the unit is used in a condition with a relative humidity over 80%, there will be condensed water on the surface of the unit.

• Always wait 3 minutes when turning the unit off and then on again, or when changing from cool to fan and back to cool. This prevents damage from occurring to the compressor.

• Performance may be reduced outside of these operating temperatures.

Electronic Work

WARNING:
BEFORE PERFORMING ANY ELECTRICAL OR WIRING WORK, TURN OFF THE MAIN POWER TO THE SYSTEM.

Electronic Type

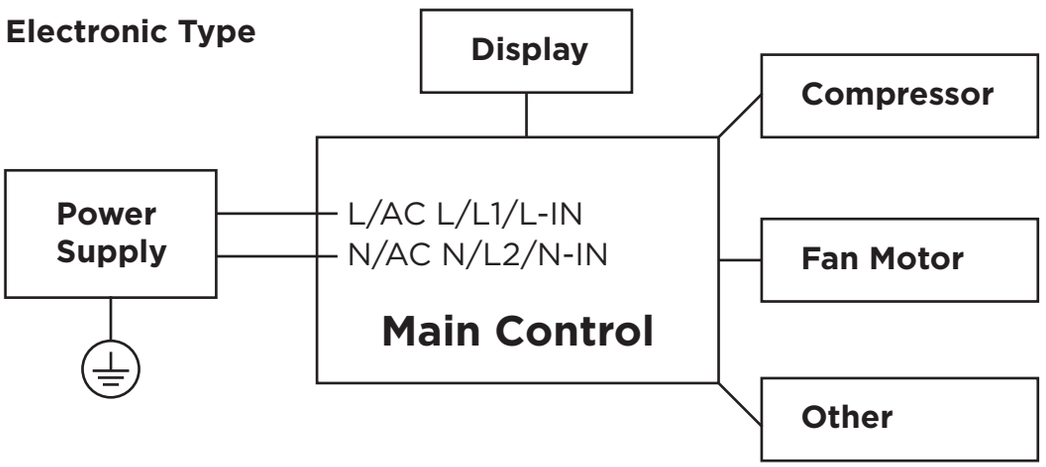

NOTE: Please strictly follow the wiring label attached to the machine for all wiring connections. The wiring diagram may vary for different unit. Please refer to the wiring diagram on the machine you have purchased. The above wiring diagram is a simplified version for preliminary illustration purposes only.



CAUTION: Risk of fire flammable materials

IMPORTANT NOTE: Read this manual carefully before installing or operating your new appliance unit. Make sure to save this manual for future reference.

Explanation of symbols displayed on the unit

	**CAUTION**	This symbol shows that the operation manual should be read carefully.
	**CAUTION**	This symbol shows that a service personnel should be handling this equipment with reference to the installation manual.
	**CAUTION**	This symbol shows that information is available such as the operating manual or installation manual.

⚠ WARNING

-Servicing shall only be performed as recommended by the equipment manufacturer. Maintenance and repair requiring the assistance of other skilled personnel shall be carried out under the supervision of the person competent in the use of flammable refrigerants.
-DO NOT modify the length of the power cord or use an extension cord to power the unit.
-DO NOT share a single outlet with other electrical appliances. Improper power supply can cause fire or electrical shock.
-Please follow the instruction carefully to handle, install, clear, service the appliance to avoid any damage or hazard.
Flammable
Refrigerant R32 is used within appliance.
-When maintaining or disposing the appliance, the refrigerant (R32) shall be recovered properly, shall not discharge to air directly.
-Compliance with national gas regulations shall be observed.
-Keep ventilation openings clear of obstruction.
-The appliance shall be stored so as to prevent mechanical damage from occurring.
-The appliance shall be stored in a well-ventilated area where the room size corresponds to the room area as specified for operation.
-Any person who is involved with working on or breaking into a refrigerant circuit should hold a current valid certificate from an industry-accredited assessment authority, which authorizes their competence to handle refrigerants safely in accordance with an industry recognized assessment specification. All training shall follow the ANNEX HH requirements of UL 60335-2-40 4th Edition.

Examples for such working procedures are:
• Breaking into the refrigerating circuit;
• Opening of sealed components;
• Opening of ventilated enclosures.
-No open fire or device like switch which may generate spark/arcing shall be around appliance to avoid causing ignition of the flammable refrigerant used. Please follow the instructions carefully when storing or maintaining the appliance to prevent mechanical damage from occurring.
-Do not use means to accelerate the defrosting process or to clean, other than those recommended by the manufacturer.
-The appliance shall be stored in a room without continuously operating ignition sources (for example: open flames, an operating gas appliance) and ignition sources or (for example: an operating electric heater) close to the appliance.
-Do not pierce or burn.
-Be aware that the refrigerants may not contain an odor.

1. Transport of equipment containing flammable refrigerants
See transport regulations.
2. Marking of equipment using signs
See local regulations.
3. Disposal of equipment using flammable refrigerants
See national regulations.
4. Storage of equipment/appliances
The storage of the appliance should be in accordance with the applicable regulations or instructions, whichever is more stringent.
5. Storage of packed (unsold) equipment
Storage package protection should be constructed such that mechanical damage to the equipment inside the package will not cause a leak of the refrigerant charge. The maximum number of pieces of equipment permitted to be stored together will be determined by local regulations.
6. Information on servicing
1) Checks to the area
Prior to beginning work on systems containing flammable refrigerants, safety checks are necessary to ensure that the risk of ignition is minimized. For repair to the refrigerating system, the following precautions shall be complied with prior to conducting work on the system.
2) Work procedure
Work shall be undertaken under a controlled procedure so as to minimize the risk of a flammable gas or vapor being present while the work is being performed.
3) General work area
All maintenance staff and others working in the local area shall be instructed on the nature of work being carried out. Work in confined spaces shall be avoided. The area around the workspace shall be sectioned off. Ensure that the conditions within the area have been made safe by control of flammable material.

4) Checking for presence of refrigerant
The area shall be checked with an appropriate refrigerating detector prior to and during work, to ensure the technician is aware of potentially flammable atmospheres. Ensure that the leak detection equipment being used is suitable for use with flammable refrigerants, i.e. non-sparking, adequately sealed or intrinsically safe.

5) Presence of fire extinguisher
If any hot work is to be conducted on the refrigeration equipment or any associated parts, appropriate fire extinguishing equipment shall be available to hand. Have a dry powder or CO2 fire extinguisher adjacent to the charging area.

6) No ignition sources
No person carrying out work in relation to a refrigerating system which involves exposing any pipe work that contains or has contained flammable refrigerant shall use any sources of ignition in such a manner that it may lead to the risk of fire or explosion. All possible ignition sources, including cigarette smoking, should be kept sufficiently far away from the site of installation, repairing, removing and disposal, during which flammable refrigerant can possibly be released to the surrounding space. Prior to work taking place, the area around the equipment is to be surveyed to make sure that there are no flammable hazards or ignition risks. No Smoking signs shall be displayed.

7) ventilated area
Ensure that the area is in the open or that it is adequately ventilated before breaking into the system or conducting any hot work. A degree of ventilation shall continue during the period that the work is carried out. The ventilation should safely disperse any released refrigerant and preferably expel it externally into the atmosphere.

8) Checks to the refrigerating equipment
Where electrical components are being changed, they shall be fit for the purpose and to the correct specifications. At all times the manufacturer's maintenance and service guidelines shall be followed. If in doubt consult the manufacturer's technical department for assistance. The following checks shall be applied to installations using flammable refrigerants: the actual refrigerant charge is in accordance with the room size within which the refrigerant containing parts are installed; the ventilation machinery and outlets are operating adequately and are not obstructed; if an indirect refrigerating circuit is being used, the secondary circuit shall be checked for the presence of refrigerant; marking to the equipment continues to be visible and legible. markings and signs that are illegible shall be corrected; and refrigerating pipe or components are installed in a position where they are unlikely to be exposed to any substance which may corrode refrigerant containing components, unless the components are constructed of materials which are inherently resistant to being corroded or are suitably protected against being so corroded.

9) Checks to electrical devices

Repair and maintenance to electrical components shall include initial safety checks and component inspection procedures. If a fault exists that could compromise safety, then no electrical supply shall be connected to the circuit until it is satisfactorily dealt with. If the fault cannot be corrected immediately but it is necessary to continue operation, an adequate temporary solution shall be used. This shall be reported to the owner of the equipment so all parties are advised. Initial safety checks shall include:

That capacitors are discharged: this shall be done in a safe manner to avoid possibility of sparking; that there no live electrical components and wiring are exposed while charging, recovering or purging the system; that there is continuity of earth bonding.

7. Sealed electrical components shall be replaced.

8. Intrinsically safe components must be replaced.

9. Cabling

Check that cabling will not be subject to wear, corrosion, excessive pressure, vibration, sharp edges or any other adverse environmental effects. The check shall also take into account the effects of aging or continual vibration from sources such as compressors or fans.

10. Detection of flammable refrigerants

Under no circumstances shall potential sources of ignition be used in the searching for or detection of refrigerant leaks. A halide torch (or any other detector using a naked flame) shall not be used.

The following leak detection methods are deemed acceptable for systems containing flammable refrigerants. Electronic leak detectors shall be used to detect flammable refrigerants, but the sensitivity may not be adequate, or may need re-calibration. (Detection equipment shall be calibrated in a refrigerant-free area.) Ensure that the detector is not a potential source of ignition and is suitable for the refrigerant used. Leak detection equipment shall be set at a percentage of the LFL of the refrigerant and shall be calibrated to the refrigerant employed and the appropriate percentage of gas (25% maximum) is confirmed. Leak detection fluids are suitable for use with most refrigerants but the use of detergents containing chlorine shall be avoided as the chlorine may react with the refrigerant and corrode the copper pipe-work. If a leak is suspected, all naked flames shall be removed/extinguished. If a leakage of refrigerant is found which requires brazing, all of the refrigerant shall be recovered from the system, or isolated (by means of shut off valves) in a part of the system remote from the leak. Removal of refrigerant shall be according to Removal and evacuation.

11. Removal and evacuation

When breaking into the refrigerant circuit to make repairs—or for any other purpose - conventional procedures shall be used. However, for flammable refrigerants it is important that best practice be followed, since flammability is a consideration. The following procedure shall be adhered to:

-Safely remove refrigerant following local and national regulations;

-Evacuate;

-Purge the circuit with inert gas (optional for A2L);

-Evacuate (optional for A2L);

-continuously flush or purge with inert gas when using flame to open circuit; and
-open the circuit.

The refrigerant charge shall be recovered into the correct recovery cylinders if venting is not allowed by local and national codes. For appliances containing flammable refrigerants, the system shall be purged with oxygen-free nitrogen to render the appliance safe for flammable refrigerants. This process might need to be repeated several times. Compressed air or oxygen shall not be used for purging refrigerant systems. For appliances containing flammable refrigerants, refrigerants purging shall be achieved by breaking the vacuum in the system with oxygen free nitrogen and continuing to fill until the working pressure is achieved, then venting to atmosphere, and finally pulling down to a vacuum (optional for A2L). This process shall be repeated until no refrigerant is within the system (optional for A2L). When the final oxygen-free nitrogen charge is used. The system shall be vented down to atmospheric pressure to enable work to take place. The outlet for the vacuum pump shall not be close to any potential ignition sources, and ventilation shall be available.

12. Charging procedures

In addition to conventional charging procedures, the following requirements shall be followed. Ensure that contamination of different refrigerants does not occur when using charging equipment. Hoses or lines shall be as short as possible to minimize the amount of refrigerant contained in them. Cylinders shall be kept in an appropriate position according to the instructions. Ensure that the refrigeration system is earthed prior to charging the system with refrigerant. Label the system when charging is complete (if not already). Extreme care shall be taken not to overfill the refrigeration system. Prior to recharging the system it shall be pressure tested with OFN. The system shall be leak tested on completion charging but prior to commissioning. A follow up leak test shall be carried out prior to leaving the site.

13. Decommissioning

Before carrying out this procedure, it is essential that the technician is completely familiar with the equipment and all its detail. It is recommended good practice that all refrigerants are recovered safely. Prior to the task being carried out, an oil and refrigerant sample shall be taken in case analysis is required prior to re-use of reclaimed refrigerant. It is essential that electrical power is available before the task is commenced.

a) Become familiar with the equipment and its operation.
b) Isolate system electrically.
c) Before attempting the procedure ensure that: mechanical handling equipment is available, if required, for handling refrigerant cylinders; all personal protective equipment is available and being used correctly; the recovery process is supervised at all times by a competent person; recovery equipment and cylinders conform to the appropriate standards.
d) Pump down refrigerant system, if possible.
e) If a vacuum is not possible, make a manifold so that refrigerant can be removed from various parts of the system.
f) Make sure that cylinder is situated on the scales before recovery takes place.
g) Start the recovery machine and operate in accordance with instructions.
h) Do not overfill cylinders. (No more than 80% volume liquid charge.)
i) Do not exceed the maximum working pressure of the cylinder, even temporarily.

j) When the cylinders have been filled correctly and the process completed, make sure that the cylinders and the equipment are removed from site promptly and all isolation valves on the equipment are closed off.

k) Recovered refrigerant shall not be charged into another refrigeration system unless it has been cleaned and checked.

14. Labelling

Equipment shall be labelled stating that it has been de-commissioned and emptied of refrigerant. The label shall be dated and signed. Ensure that there are labels on the equipment stating the equipment contains flammable refrigerant.

15. Recovery

When removing refrigerant from a system, either for servicing or decommissioning, it is recommended good practice that all refrigerants are removed safely. When transferring refrigerant into cylinders, ensure that only appropriate refrigerant recovery cylinders are employed. Ensure that the correct number of cylinders for holding the total system charge is available. All cylinders to be used are designated for the recovered refrigerant and labelled for that refrigerant (i.e., special cylinders for the recovery of refrigerant). Cylinders shall be complete with pressure-relief valve and associated shut-off valves in good working order. Empty recovery cylinders are evacuated and, if possible, cooled before recovery occurs. The recovery equipment shall be in good working order with a set of instructions concerning the equipment that is at hand and shall be suitable for the recovery of the flammable refrigerant. If in doubt, the manufacturer should be consulted. In addition, a set of calibrated weighing scales shall be available and in good working order. Hoses shall be complete with leak-free disconnect couplings and in good condition. The recovered refrigerant shall be processed according to local legislation in the correct recovery cylinder, and the relevant waste transfer note arranged. Do not mix refrigerants in recovery units and especially not in cylinders. If compressors or compressor oils are to be removed, ensure that they have been evacuated to an acceptable level to make certain that flammable refrigerant does not remain within the lubricant. The compressor body shall not be heated by an open flame or other ignition sources to accelerate this process. When oil is drained from a system, it shall be carried out safely.

Unit parts identification

NOTE ON ILLUSTRATIONS:

All the illustrations in the manual are for explanation purpose only. Your machine may be slightly different. The actual shape shall prevail. The unit can be controlled by the unit control panel alone or with the remote controller.

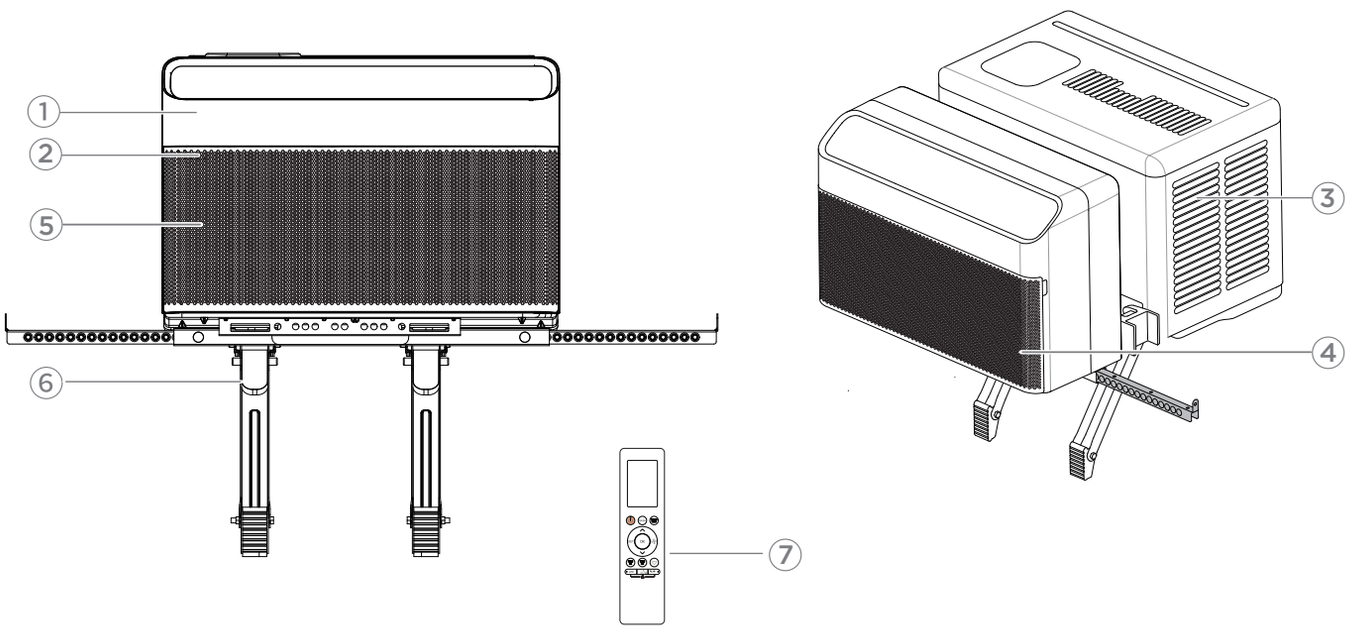

1. Air Outlet 2. Electronic control keypad 3. Air Inlet grille (outdoor side)
4. Front panel open clasp 5. Front panel (Air Outlet) 6. Bracket 7. Remote controller

Design Notice

In order to ensure the optimal performance of our products, the design specifications of the unit and remote control are subject to change without prior notice.

⚠ CAUTION

BEFORE YOU BEGIN

- Read these instructions completely and carefully.
- IMPORTANT-Save these instructions for local inspector's use.
- IMPORTANT-Observe all governing codes and ordinances.
- Note to Installer- Be sure to leave these instructions with the Consumer.
- Note to Consumer- Keep these instructions for future reference.
- Skill level- Installation of this appliance requires basic mechanical skills.
- Completion time- Approximately 1 hour. We recommend that two people install this product.
- Proper installation is the responsibility of the installer.
- Product failure due to improver installation is not covered under the Limited Warranty.
- You MUST use all supplied parts and use proper installation procedures as described in these instructions when installing this air conditioner.
- Installation is recommended to be completed by 2 people.

⚠ WARNING

- Do not, under any circumstances, cut or remove the third (ground) prong from the power cord.
- Do not change the plug on the power cord of the air conditioner.
- Aluminum house wiring may present special problems- consult a qualified electrician.
- When handling the unit, be careful to avoid cuts from sharp metal edges and aluminum fins on front and rear coils.

TOOLS YOU WILL NEED

Prepare the following tools



Proper PPE

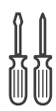

Screwdriver



Pencil



Scissors



Drill

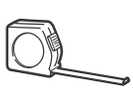

Ruler or tape measure

*Not Included

NOTE

Save carton and these Installation Instructions for future reference. The carton is the best way to store unit during winter, or when not in use.

If any piece of hardware is missing, DO NOT INSTALL THE PRODUCT, and call customer service.

Install AC Support bracket and AC

Installation exploded view:

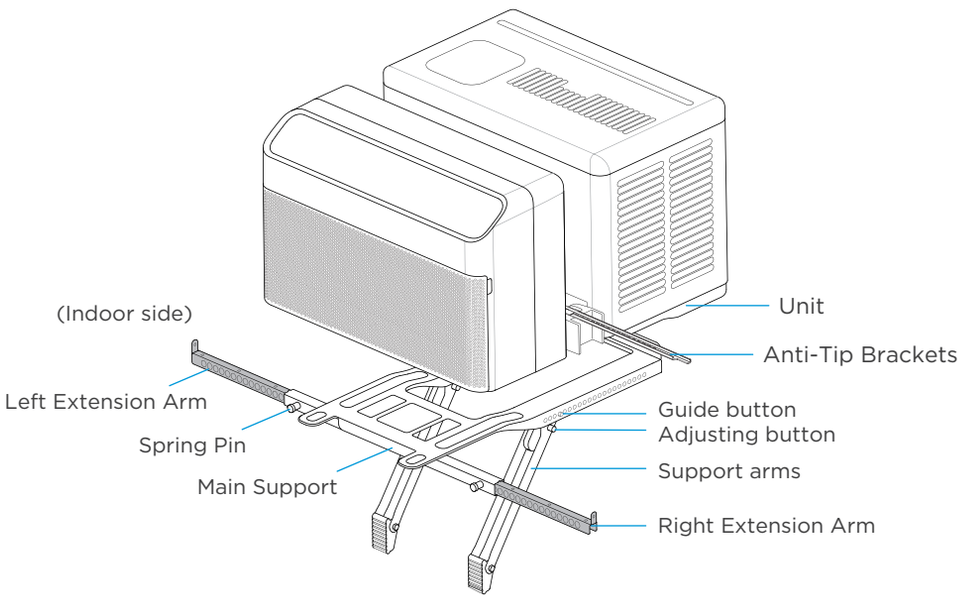

Installation Hardware:

NO.	Mounting Hardware		Qty.	NO.	Mounting Hardware		Qty.
A1	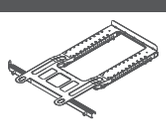	Main Bracket	1	B1		Side Arm Foam	2
				B2		Window Sash Lock (optional)	1
A2		Right Extension Arm (For 26”-36” windows)	1	B3		Window Sash Foam	1
A3		Right Extension Arm – Short (For 22”-26” windows)	1	B4		Window Sealing Foam (adhesive)	1
A4		½” Type A Screw	2	B5		Bracket Sealing Foam	1
A5		1” Type A Screw	2	B6		Additional Side Arm Foam	2
A6		1 – ½” Type A Screw	2	B7		Flat Sill Adapter (for flat window)	1
A7		Drain Plug (Black)	7	B8		Level	1

* Denotes extra hardware provided in separate bag. (on some models)

Different type of Windows:

Determine whether your windowsill is flat or has a lip.

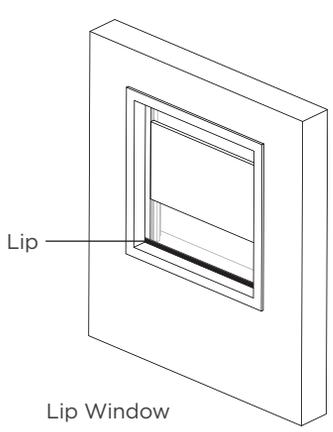

Lip Window

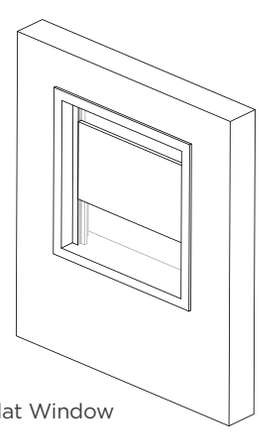

Flat Window

Step 1: Install Support Bracket (for Lip Window)

⚠ CAUTION

To reduce the risk of health issues related to mold, inspect your air conditioner frequently and follow the cleaning guidelines included in the user manual. If dust accumulates, mold can grow in an air conditioner because of the moist environment.

WARNING Personal injury hazard

Maintain control of the bracket until installation is complete.

Level Video Guide

1

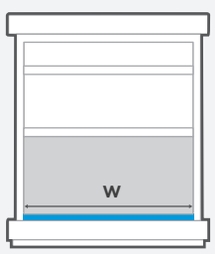



Right Extension Arm (A2)



Right Extension Arm – Short (A3)

Select the proper extension arm based on the width of your window.
Use Right Extension Arm – **Short for 22-26 in.** windows, and Right Extension Arm for **26-36 in.** windows.

2

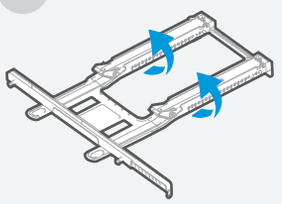

Remove the tape from the bracket (A1) and flip it over.

3

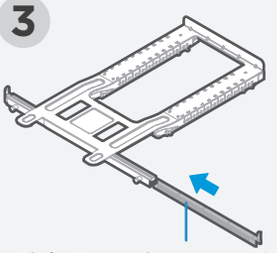

Insert the proper extension arm in the bracket as shown.

4

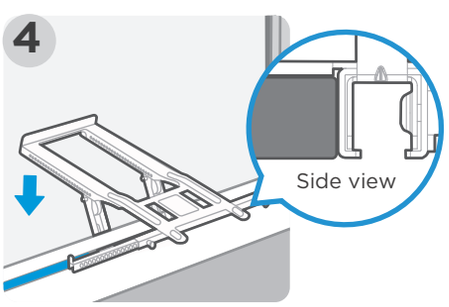

Place the bracket in the center of the window. **Ensure the main support is on the interior side of the lip.**

5

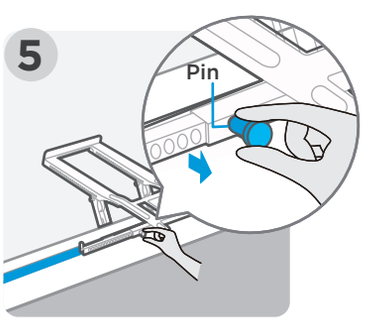

Pull the spring pin and slide the arm out until it contacts the window casing. Repeat on the other side.

6

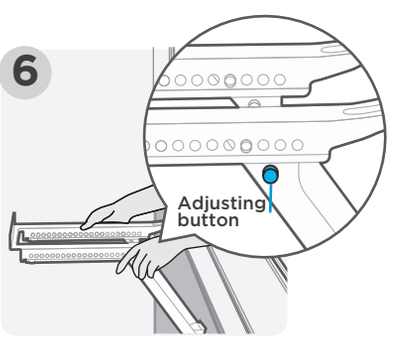

Press the adjusting button on each support arm to adjust the legs until they rest against the wall on the outside.

7

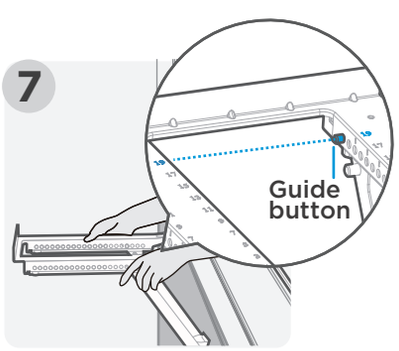

Ensure the guide button are protruding from the **same number** hole on each arm.

8

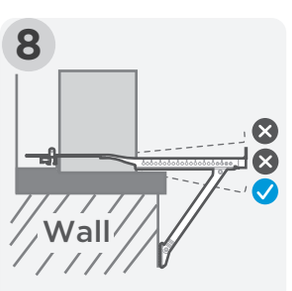

Ensure the bracket is angled slightly towards the outside.

9

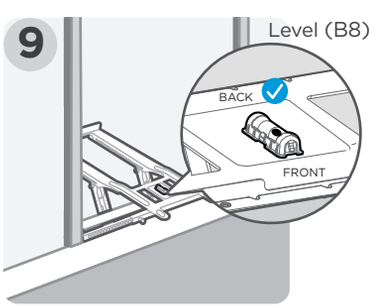

The bubble in the level must be touching the indicator line towards the front for proper tilt angle. the bracket is ready for the unit to be installed.

Step 1: Install Support Bracket (for Flat Window)

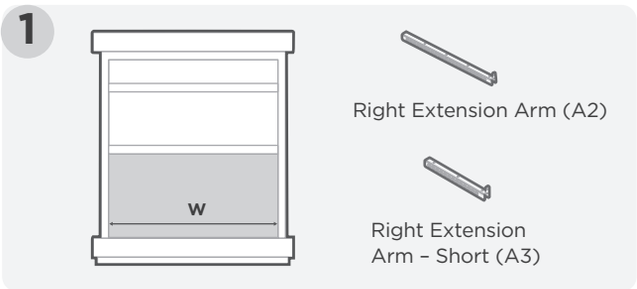

Select the proper extension arm based on the width of your window.
Use Right Extension Arm – **Short for 22-26 in.** windows, and Right Extension Arm for **26-36 in.** windows.

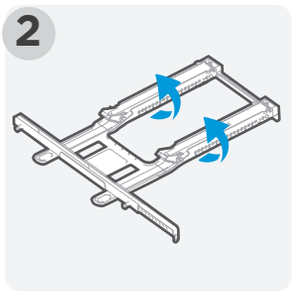

Remove the tape from the bracket and flip it over.

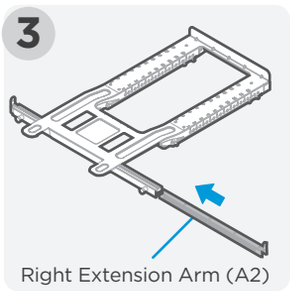

Insert the proper extension arm in the bracket as shown.

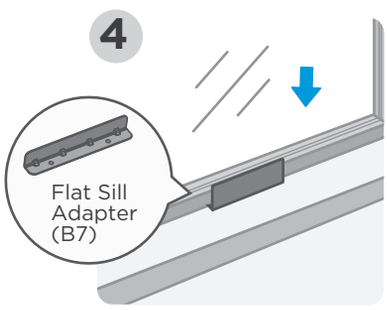

Place the flat sill adapter (B7) on the windowsill so that the window sash lowers just behind the vertical face of the adapter.

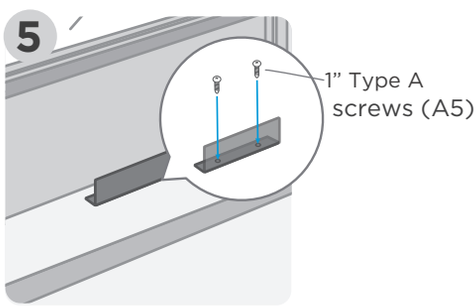

Secure the flat sill adapter (B7) to the window sill using 1" (A5) Type A screws .

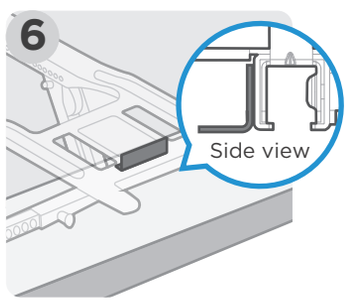

Place the bracket in the center of the window, with the main support resting **on the interior side** of the adapter.

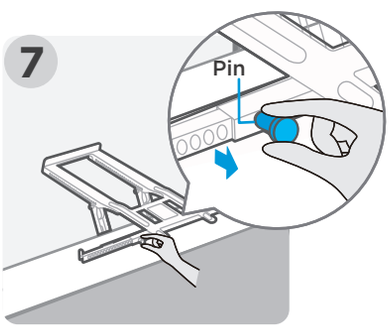

Pull the spring pin and slide the arm out until it contacts the window casing. Repeat on the other side.

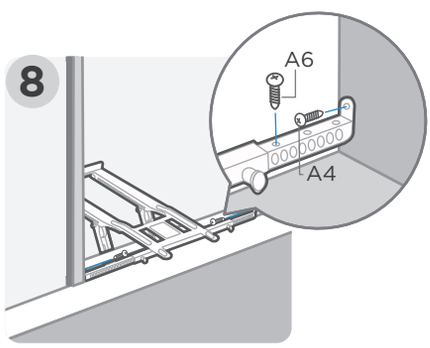

Secure it to the windowsill using the 1 – ½" (A6) Type A screws on both sides as shown. Use the ½" (A4) screws to fasten each extension arm to the wall as shown.

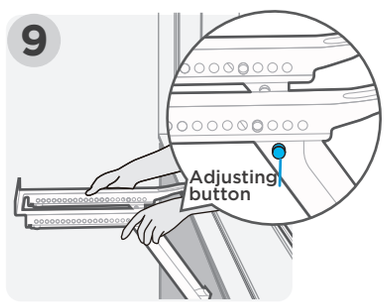

Press the adjusting button on each support arm to adjust the legs until they rest against the wall on the outside.

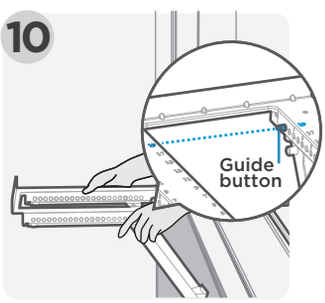

Ensure the guide button are protruding from the **same number** hole on each arm.

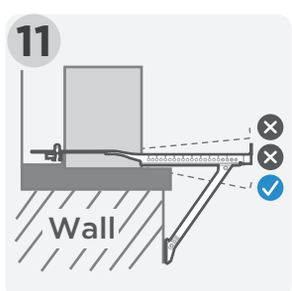

Ensure the bracket is angled slightly towards the outside.

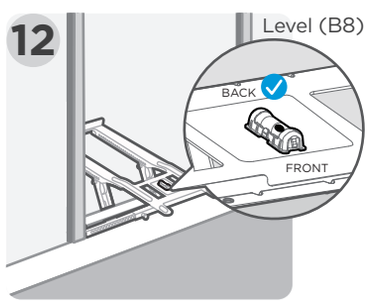

The bubble in the level must be touching the indicator line towards the front for proper tilt angle. the bracket is ready for the unit to be installed.

Step 2: Install Air Conditioner

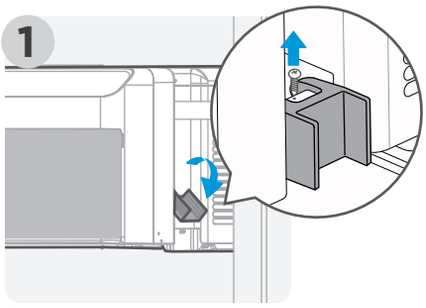

Fold down both side arm hinges and **remove the screw** on each side. Save these screws for step 3.4 below.

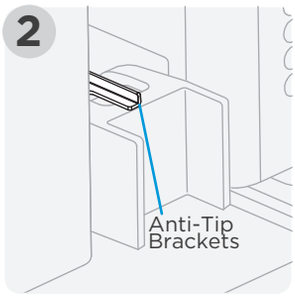

Remove the tape and slide out the anti-tip arms from each side about 1 inch through the opening in the side arm hinges.

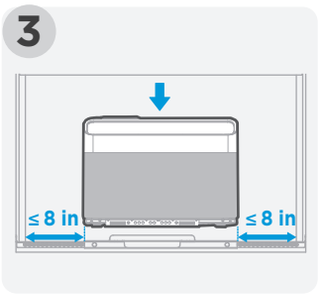

Place the AC unit on the bracket. Ensure it is centered in the window.

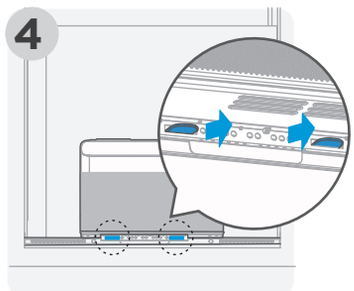

Carefully slide the unit out until the flanges on the bracket **pass through** the grooves on the bottom of the unit.

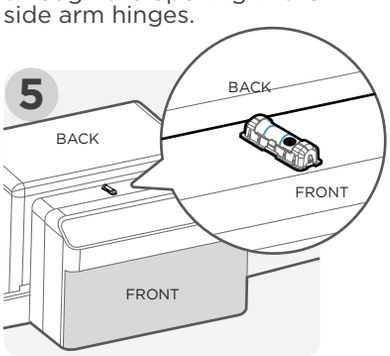

The bubble in the level must be touching the indicator line towards the front of the Air Conditioner for proper tilt angle.

⚠ WARNING
Personal injury hazard.

- Do not leave the unit unattended during installation.
- Extend the Anti-Tip Brackets into the window track opening. Failure to do so may result in serious injury.

Step 3: Foam Installation

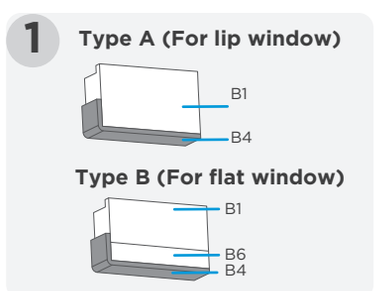

Cut the side arm foam (B1) to length and attach the window sealing foam (B4)and additional side arm foam (B6)as shown above based on your window type.

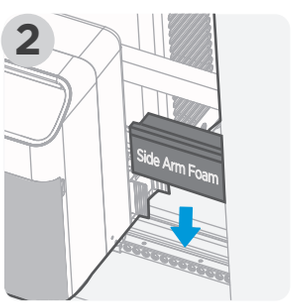

Insert the side arm foam (B1) on each side.

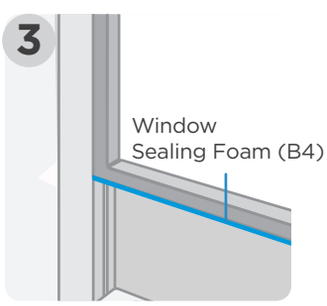

Cut the adhesive window sealing foam (B4) to the width of your window and attach it to the bottom of the windowpane.

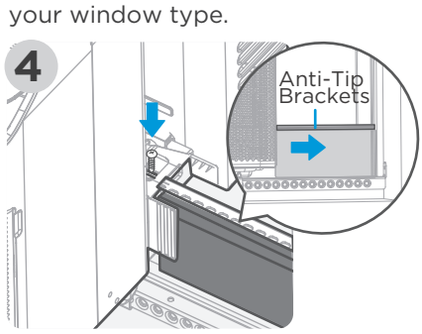

The anti-tip brackets must be extended into the window track opening (the vertical track your window slides up and down in) until they stop. Secure the brackets in place using the screws removed in step 2.1 above.



Cut window sash foam (B3) and insert it in the space between the upper and lower sashes.

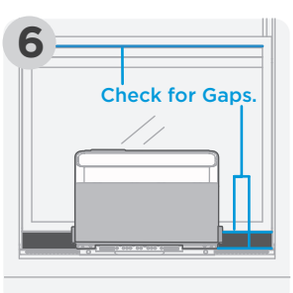

Installation is completed.

Normal Sounds

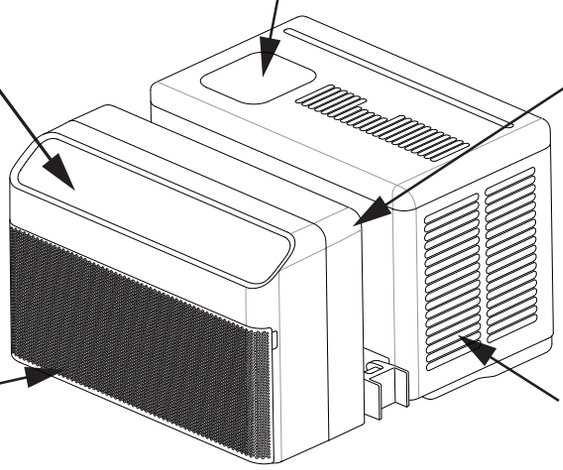

High Pitched Chatter

High efficiency compressors may have a high pitched chatter during the cooling cycle.

Sound of Rushing Air

At the front of the unit, you may hear the sound of rushing air being moved by the fan.

Vibration

Unit may vibrate and make noise because of poor wall or window construction or incorrect installation.

Gurgle/Hiss

“Gurgling or hissing” noise may be heard due to refrigerant passing through evaporator during normal operation.

Trickling Sound

Droplets of water hitting condenser during normal operation may cause a trickling sound.

Quick guide

To begin operating the air conditioner, follow these steps:

- Plug in the air conditioner (be sure to follow the power cord instructions).
- Turn the power on to the air conditioner, using the ON/OFF button.
- Set the thermostat to the coldest temperature setting.
- Select the Cool mode setting.
- Adjust the louver for comfortable air flow (see Adjust your air conditioning direction.).
- Once the room has cooled, adjust the thermostat to the setting you find most comfortable.
- Make sure the air flow inside and outside is not obstructed by anything.

Adjust your air conditioning direction.

⚠ CAUTION

Personal injury hazard. Avoid inserting fingers into the air outlet, as it may cause injury

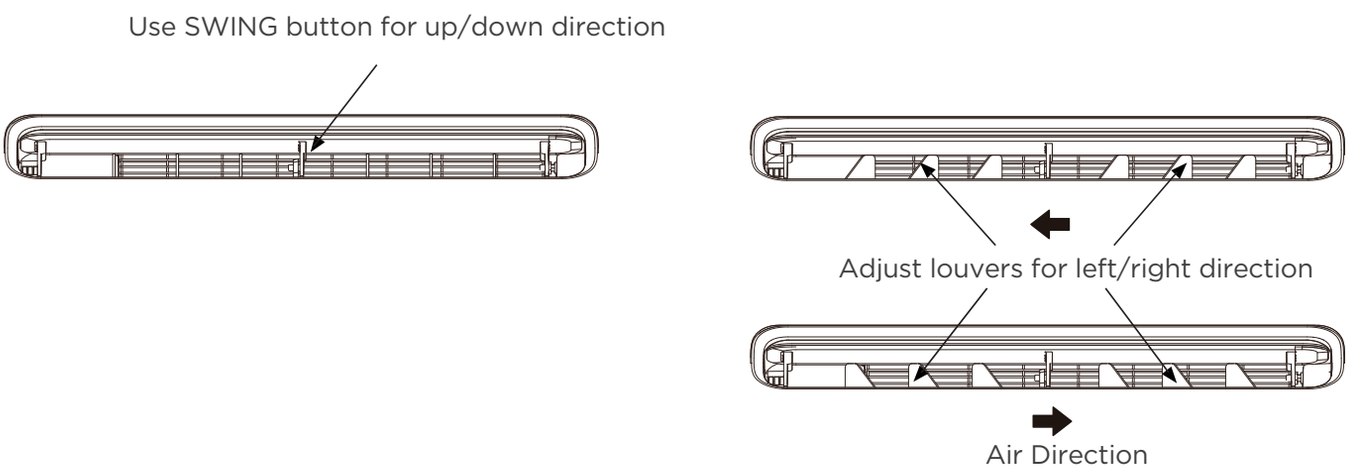

The louvers will allow you to direct the air flow up or down (on some models) and left or right throughout the room as needed. Use the SWING button until the desired up/down direction is obtained.

Move the louvers from side to side until the desired left/right direction is obtained.

Get to know the features

NOTE

Different models have different control buttons and indicator lights. Not all the control buttons and indicator lights describing below are available for the unit you purchased. Please check the control panel of the unit you purchased.
The unit can be controlled by the unit control or with the remote.

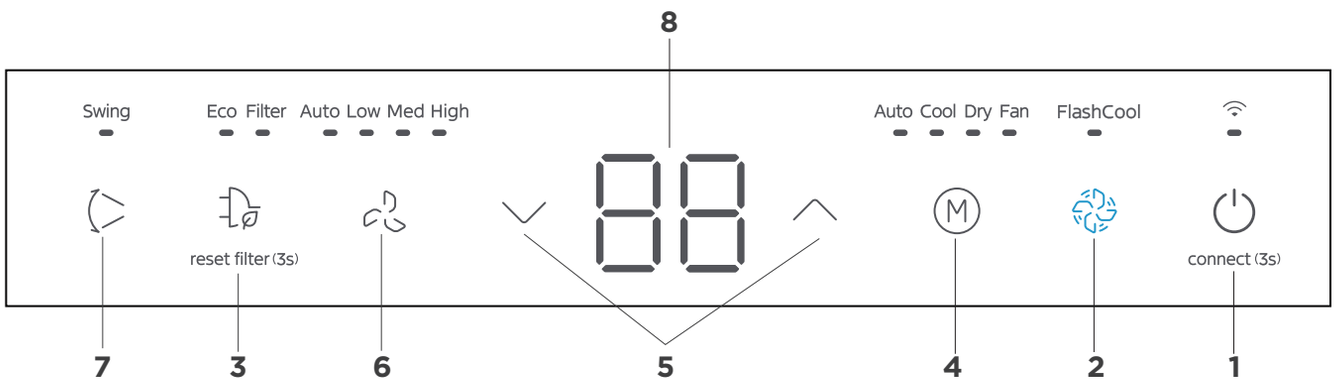

	Description	
1	**On/Off**	• Press to Turn the unit on or off.
2	**FlashCool**	• Press to turn FlashCool on or off.
3	**ECO (Reset Filter)**	• Press to turn on or off the energy saver featurewhich will maintain comfort and save energy. • Press and hold for 3 seconds to reset the filter clean indicator.
4	**Mode**	• Press to choose the operating mode in a sequence from Auto, Cool, Dry, and Fan.
5	**Up/Down**	• Press to change the temperature setting.
6	**Fan Speed**	• Press to choose the fan speed in a sequence from Auto, Low, Med, and High.
7	**Swing**	• Press to initiate the auto swing feature

1. ON/OFF BUTTON:

Press On/Off button to turn unit on or off.

Connect

- To connect your air conditioner to wireless , press the On/Off button for 3 seconds to initiate the wireless connection mode. The display shows ‘AP’ to indicate the unit is in the wireless connection mode.Refer to the wireless section for further instructions.
- If connection is successful within 8 minutes, the unit will exit wireless connection mode automatically and the connect LED will illuminate.
- If connection fails within 8 minutes, the unit exits wireless connection mode automatically and the connect LED will not illuminate.
- After wireless connection is successful, you can press and hold the On/Off and Down buttons for 3 seconds to turn off the wireless function and the LED display will show ‘OF’ for 3 seconds. Press the On/Off and up buttons for 3 seconds to turn the wireless function back on and the LED display will show ‘On’ for 3 seconds.

2. FlashCool Button:

Press to turn FlashCool On or off. In FlashCool mode, the air conditioner will run at the highest fan speed and compressor speed to provide additional cooling to reach the temperature setpoint. Once the setpoint is reached, the unit will continue to run the fan in high speed and stay in FlashCool mode.
FlashCool mode will end if:

- You press the button again
- The unit is turned off
- The mode is changed
- The fan speed is changed
- ECO or sleep mode are enabled.

3. ECO FUNCTION:

Press Energy saver button to initiate this function.This function is available on COOL, DRY, AUTO (only AUTO-COOLING and AUTO-FAN) modes.The fan will continue to run for 3 minutes after the compressor shuts o.The fan then cycles on for 2 minutes at 10 minute intervals until the room temperature is above the set temperature, at which time the compressor turns back on and Cooling Starts.

Press and hold the ECO button for 3 seconds to reset the filter clean indicator. This feature is a reminder to clean the air filter for normal operation. The Filter LED will illuminate after 250 hours of operation. To reset this timer, press and hold the ECO button for 3 seconds.

4.MODE BUTTON

To choose operating mode, press the MODE button. Each time you press the button, a mode is selected in a sequence that goes from Auto, Cool, Dry and Fan. The indicator light beside the button will be illuminated and will remain on once that mode is selected.

The unit will automatically initiate the Energy Saver function under Cool, Dry, and Auto (only Auto-Cooling and Auto-Fan) modes.

1. To operate on Auto feature :

- When you set the air conditioner to Auto mode, it will automatically select cooling or fan only operation, depending on what temperature you have selected and the current room temperature.
- The air conditioner will control the room temperature automatically based on the temperature you set.
- In this mode, the fan speed cannot be adjusted, it starts automatically at a speed according to the room temperature.

2. To operate on COOL mode :

- Choose Cool Mode to set the cooling function. Use the Up and Down buttons to choose the desired temperature. When Cool Mode is selected, the fan speed can be adjusted by pressing the fan button.

3. To operate on Dry mode :

- In this mode, the air conditioner will generally operate as a dehumidifier. Since the conditioned space is a closed or sealed area, some degree of cooling will continue. On Dry mode, the fan speed is not adjustable.

4. To operate on Fan Only :

- Use this function only when cooling is not desired, such as for room air circulation or to exhaust stale air. You can choose any fan speed you prefer.
- In Fan only mode, the temperature can not be adjusted, and the display will show the actual room temperature, not the set temperature as in the cooling mode.

5. ⌃ ⌄ Button

- Press ⌃ or ⌄ button to change temperature setting.
  NOTE: Press or hold either ⌃ or ⌄ button until the desired temperature is shown on the display. This temperature will be automatically maintained anywhere between 60˚F (16˚C) and 86˚F (30˚C). If you want the display to read the actual room temperature, see “To Operate on Fan Only” section.”

6.FAN BUTTON

Press Fan button to select the Fan Speed in four steps-Auto, Low, Med or High. Each time the button is pressed, the fan speed mode is shifted. For some models, the fan speed can not be adjusted.

7.SWING BUTTON

Used to initiate the Auto swing feature. When the operation is ON, pressing the SWING button can stop the louver at the desired angle.

8.DISPLAYS

Shows the set temperature in " ℃" or " ℉" and the Auto-timer settings. While on Fan only mode, it shows the room temperature. If the room temperature is too high or low, it will display " HI" or " LO".The control is capable of displaying temperature in degrees Fahrenheit or degrees Celsius. To convert from one to the other, press and hold the Up and Down buttons at the same time for 3 seconds.

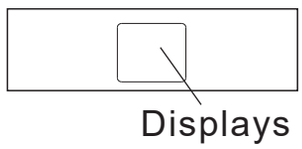

Electronic control operating instructions

Error codes:

The unit may stop operation or continue to run safely. If the error codes appear, wait for about 10 minutes. The problem may resolve itself. If not, disconnect the power, then connect it again. Turn the unit on. If the problem persists, disconnect the power and contact your nearest customer service center.

Error code appears andbegins with the letters as the following in the window display of indoor unit: EH(xx), EL(xx), EC(xx) , PH(xx), PL(xx), PC(xx).

NOTE:If your problem persists after performing the checks and diagnostics above, turn off your unit immediately and contact an authorized service center.

NOTE

If your problem persists after performing the checks and diagnostics above, turn off your unit immediately and contact an authorized service center.

If there is a power outage, the unit will restart with the previous function settings automatically when power is restored.

ADDITIONAL THINGS YOU SHOULD KNOW

Now that you have mastered the operating procedure, here are more features in your control that you should become familiar with.

The Cool circuit has an automatic 3 minutes time delayed start if the unit is turned off and on quickly. This prevents overheating of the compressor and possible circuit breaker tripping. The fan will continue to run during this time.

Notes For Using Remote Control

The device could comply with the local national regulations.

- In Canada, it should comply with CAN ICES-3(B)/NMB-3(B).
- In USA, this device complies with part 15 of the FCC Rules. Operation is subject to the following two conditions:

(1) This device may not cause harmful interference,and

(2) This device must accept any interference received, including interference that may cause undesired operation.

This equipment has been tested and found to comply with the limits for a Class B digital device, pursuant to part 15 of the FCC Rules. These limits are designed to provide reasonable protection against harmful interference in a residential installation. This equipment generates, uses and can radiate radio frequency energy and, if not installed and used in accordance with the instructions, may cause harmful interference to radio communications. However, there is no guarantee that interference will not occur in a particular installation. If this equipment does cause harmful interference to radio or television reception, which can be determined by turning the equipment off and on, the user is encouraged to try to correct the interference by one or more of the following measures:

- Reorient or relocate the receiving antenna.
- Increase the separation between the equipment and receiver.
- Connect the equipment into an outlet on a circuit different from that to which the receiver is connected.
- Consult the dealer or an experienced radio/TV technician for help.
- Changes or modifications not approved by the party responsible for compliance could void user's authority to operate the equipment.

Battery Warning:

- Do not mix old and new batteries and do not mix alkaline, standard (carbon-zinc) or rechargeable (ni-cad, ni-mh, etc.) batteries.
- Always purchase the correct size and grade of battery most suitable for the intended use.
- Replace all batteries of a set at the same time.
- Clean the battery contacts and also those of the device prior to battery installation.
- Remove batteries from equipment that is not to be used for an extended period of time.
- Remove used batteries promptly.
- Dispose of used batteries according to local laws and regulations.

Function Buttons

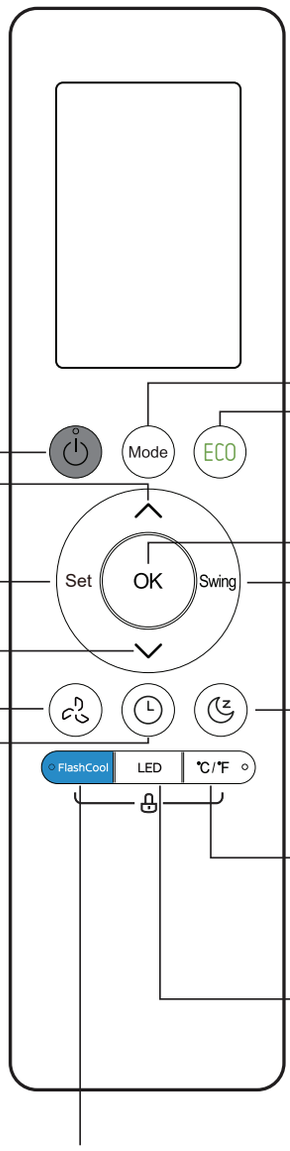

ON/OFF
Turns the unit on or off.

TEMP ∧
Increases temperate in 1°F (1°C) increments.
Max. temperature is 86°F (30°C).

Set
Scrolls through operation functions as follows:
Comfort Sense ( ) → AP mode ( ) → ...
The selected symbol will flash on the display area, press the OK button to confirm.

TEMP ∨
Decreases temperature in 1°F (1°C) increments.
Min. temperature is 60°F (16°C).

FAN SPEED
Switches the fan speed as follows:
Auto → Low → Medium → High ...

TIMER ON/OFF
Sets timer to turn unit on or off (see page 31 for instructions).

MODE
Switches the operating modes as follows:
Auto → Cool → Dry → Fan

ENERGY SAVER
Press this button to toggle energy saver mode.

OK
Press to send the desired settings to the AC unit.

SWING
Starts and stops the horizontal louver movement.

SLEEP
Saves energy during sleeping hours.

°C/°F
Change the temperature units between °C and °F.

LED
Turns indoor unit's LED display and air conditioner buzzer on and off (model dependent), which create a comfortable and quiet environment.

FlashCool
Turns FlashCool function on or off.

Supplier's Declaration of Conformity
47 CFR § 2.1077 Compliance Information

Unique Identifier: Midea brand, RG10A16(B2S)/BGCEFU1

Responsible Party U.S. Contact Information

Midea America Corporation
300 Kimball Dr
Parsippany NJ
07054

Telephone number or internet contact information: Midea.com/us

FCC Compliance Statement (products subject to Part 15)

This device complies with Part 15 of the FCC Rules. Operation is subject to the following two conditions: (1) This device may not cause harmful interference, and (2) this device must accept any interference received, including interference that may cause undesired operation.

Remote Screen Indicators

Information is displayed when the remote controller is used.

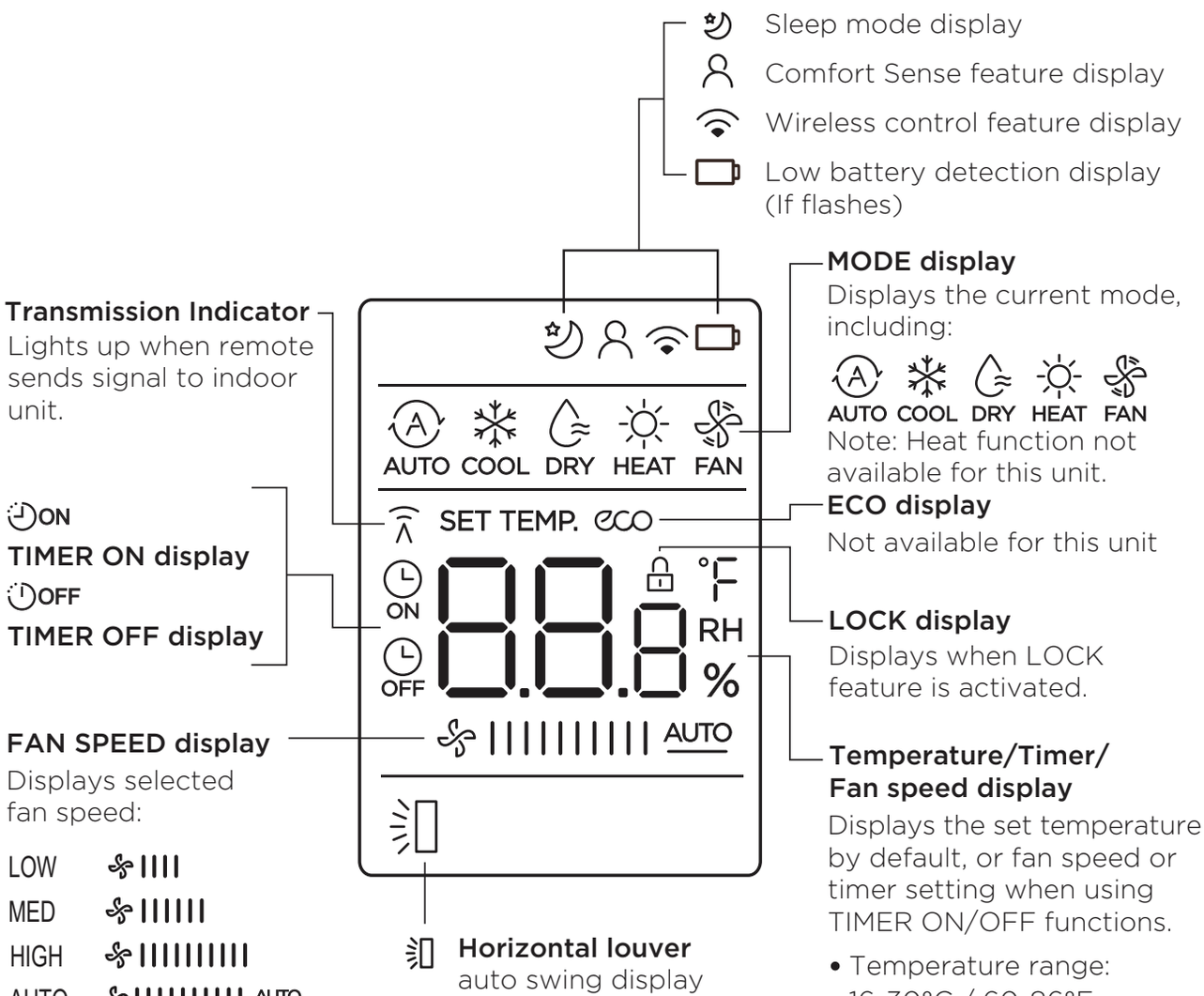

Transmission Indicator
Lights up when remote sends signal to indoor unit.

MODE display
Displays the current mode, including:

AUTO COOL DRY HEAT FAN

Note: Heat function not available for this unit.

ON
TIMER ON display
OFF
TIMER OFF display

ECO display
Not available for this unit

LOCK display
Displays when LOCK feature is activated.

FAN SPEED display
Displays selected fan speed:

LOW
MED
HIGH
AUTO

This fan speed can not be adjusted in AUTO or DRY mode.

Horizontal louver
auto swing display

Temperature/Timer/ Fan speed display
Displays the set temperature by default, or fan speed or timer setting when using TIMER ON/OFF functions.

- Temperature range: 16-30°C / 60-86°F
- Timer setting range: 0-24 hours

This display is blank when operating in FAN mode.

NOTE

All indicators shown in the figure are for the purpose of clear presentation. But during the actual operation, only the relative funcions signs are shown on the display window.

Setting the TIMER

TIMER ON/OFF

Set the amount of time after which the unit will automatically turn on/off.

TIMER ON Setting

Press TIMER button to initiate the ON time sequence.

Press up or down button multiple times to set the desired time to turn on the unit.

Point remote to unit and wait 1sec, the TIMER ON will be activated.

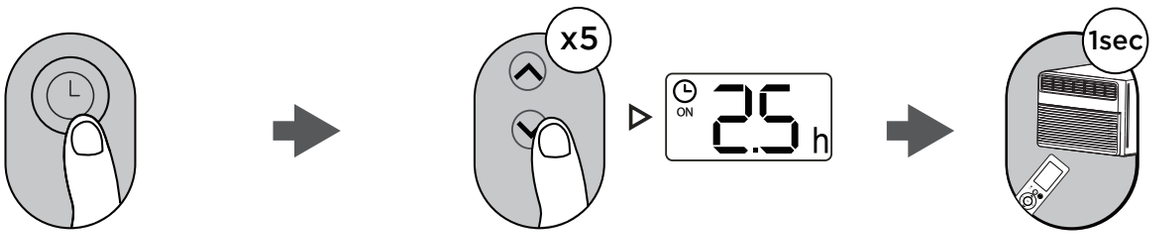

TIMER OFF Setting

Press TIMER button to initiate the OFF time sequence.

Press up or down button multiple times to set the desired time to turn off the unit.

Point remote to unit and wait 1sec, the TIMER OFF will be activated.

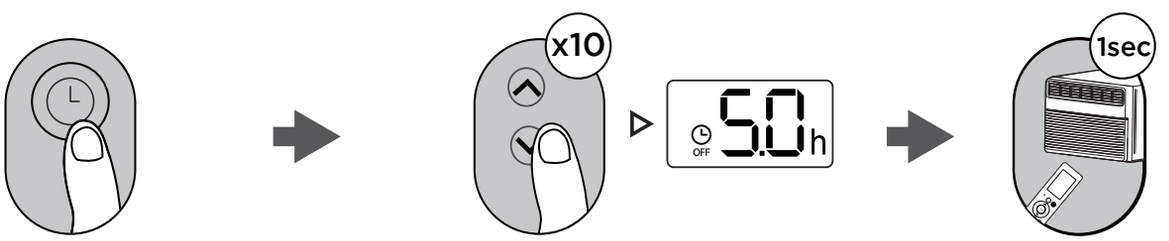

NOTE

1. When setting the TIMER ON or TIMER OFF, the time will increase by 30 minutes increments with each press, up to 10 hours. After 10 hours and up to 24, it will increase in 1 hour increments. (For example, press 5 times to get 2.5h, and press 10 times to get 5h,). The timer will revert to 0.0 after 24.
2. Cancel either function by setting its timer to 0.0h.

TIMER ON & OFF Setting (example)

Keep in mind that the time periods you set for both functions refer to hours after the current time.

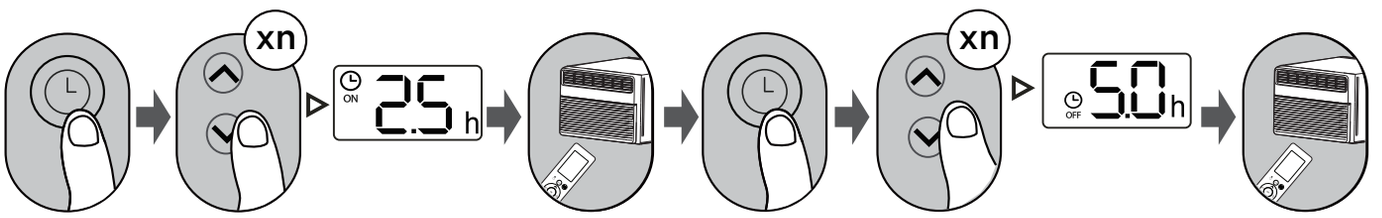

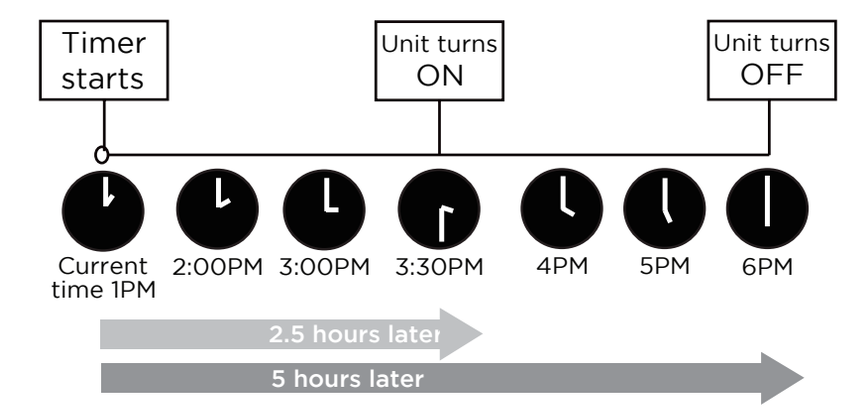

Example: If current timer is 1:00PM, to set the timer as above steps, the unit will turn on 2.5h later (3:30PM) and turn off at 6:00PM.

Set Function

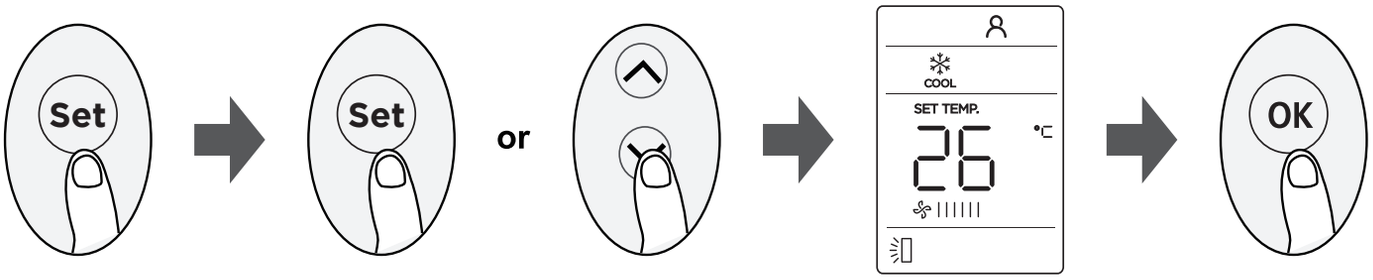

Press the Set button to enter the function setting, then press Set button or TEMP ∧ or TEMP ∨ to select the desired function. The selected symbol will flash on the display area, press the OK button to confirm.

- To cancel the selected function, just perform the same procedures as above.

  Press the Set button to scroll through operation function as follow:

  Sleep ( ) ⟶ C SENSE ( ) ⟶ AP mode ( )

C SENSE Function ( ):

The C SENSE function enables the remote control to measure the temperature at its current location and send this signal to the air conditioner in 3 minutes intervals. When using AUTO or COOL modes, measuring ambiente temperature from the remote control (instead of from the indoor unit itself) will enable the air conditioner to optmize the temperature around you and ensure maximum comfort.

AP Function ( ):

Choose AP mode to do wireless network configuration. For some units, it doesn't work by pressing the SET button. To enter the AP mode, continuously press the LED button 7 times in 10 seconds.

Sleep Function ( ):

The SLEEP function is used to decrease energy use while you sleep (and don't need the same temperature settings to stay comfortable). This function can only be activated via remote control.

Press the Sleep button to initiate the sleep mode. In this mode the selected temperature will increase (in cooling mode) by 2°F (1°C) 30 minutes after the mode is selected.

This new temperature will be maintained for 7 hours before it returns to the originally selected temperature.

This ends the Sleep mode and the unit will continue to operate as originally programmed. The Sleep mode program can be canceled at any time during operation by pressing the Sleep button again.

NOTE

It is only available in COOL mode.

Declaration of Conformity

We hereby declare that this AC is in compliance with the essential requirements and other relevant provisions of Directive 1999/5/EC.

App Setup and Operation

Wireless Control Feature

Applicable system: iOS, Android

- Please keep your app up to date with the latest version.
- Not all of Android and iOS systems are compatible with the app. We declare explicitly that we will not be held responsible for any issue as a result of the incompatibility.

Wireless safety strategy

- Smart Kit only supports WPA-PSK/WPA2-PSK encryption and no encryption. WPA-PSK/WPA2-PSK encryption is recommended.

NOTICE:

- Network issues may occasionally cause timeouts. The unit display and the app may become unsynchronized but this will resolve itself when the network is restored.
- Smart phone cameras need to be 5 megapixels or above to scan the QR code correctly.
- Should the network remain unavailable, it might be necessary to run the configuration process again.
- The app is subject to updates without prior notice for product function improvement.
- The actual network configuration process may vary slightly from the manual.
- Please check the service website for more information.

SPECIFICATION:

- Wireless Module Model: EU-SK105, US-SK105, EU-SK106, US-SK106,EU-SK107, US-SK107, EU-SK109, US-SK109, EU-SK110, US-SK110
- Antenna Type: Printed PCB Antenna
- Frequency Band: 2400 - 2483.5MHz
- Operation Temperature: 0°C~45°C/32°F~113°F
- Operation Humidity: 10% ~ 85%
- Power Input: DC 5V / 500mA
- Maximum TX Power: < 20dBm

PREPARATION

- Please ensure your mobile device is connected to your wireless router. The wireless router should already be connected to the Internet before doing user registration and network configuration.
- Preferably remove unneeded wireless networks on your phone to avoid problems during the configuration process.

Download and install app

1. Ensure your mobile phone is connected to your home network.
2. Scan the QR code below to download the SmartHome app from app store or search for it directly on the Google Play Store or Apple's App Store.







Network configuration

NOTICE:

- As mentioned above, remove or “forget” other unneeded wireless networks especially if nearby. Your device should be connected to the same network you will be connecting the unit to.
- As your phone will temporarily connect to the air conditioner, your phone must be set to automatically reconnect to your wireless network when the process is complete.

Kindly reminder:

- All the steps for network configuration must be completed within 8 minutes after powering on the air conditioner, otherwise you will need to power it off and on again.

NOTE:

- Make sure your devices are powered on.
- Keep your mobile phone close enough to the unit when you are configuring the network to the unit.
- Connect your mobile phone to the wireless network at home and make sure you know the password of the network.
- Check if your router supports the 2.4 GHz wireless band and that it is turned on. If you are not sure whether the router supports the 2.4 GHz band, please contact the router manufacturer.
- The device cannot connect to the wireless that requires authentication. Typically the wireless network in public areas such as hotels, restaurants, etc. work in this way. Please connect to a wireless network that does not require authentication.
- It is recommended to use a wireless network name that only contains letters and numbers and not special characters.
- If your wireless network name contains special characters, please change it on your router. You phone and other devices will then need to reconfigure their wireless connection.
- Turn off the WLAN+ (Android) or WLAN Assistant (iOS) function of your mobile phone when configuring the unit.
- In the case that your device connected to wireless network before but it needs to reconnect, please click "+" on app Home page, and add your device again by the device category and model according to the instructions on app.

Register and log in

- Open the SmartHome app. Log in directly if you have an existing SmartHome account or create a new account. Alternatively, you can also use a 3rd party login platform.

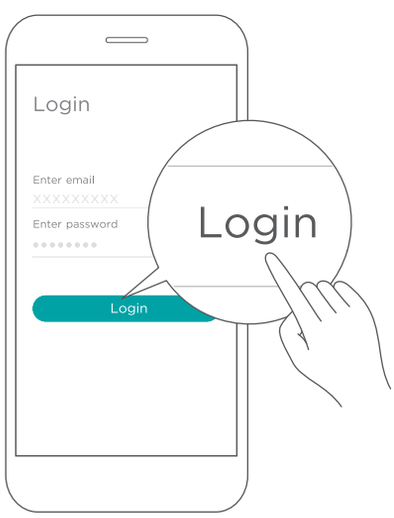

Connecting the device

1. Please make sure your mobile phone is connected to your wireless network and that Bluetooth is on. If that is not the case, go to your phone settings and turn them on.
2. Please power on the devices you wish to connect to.
3. Open SmartHome app on your phone.
4. If the message "Smart devices discovered nearby" appears, click on this to add the automatically discovered devices..

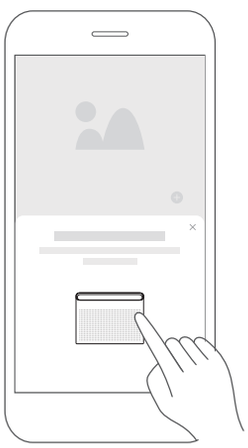

5. If no such message appears, proceed as follows:

Tap on "+" and select your device in the list of nearby available devices.If your device is not listed, please add your device manually, first selecting the device category e.g. Portable AC.

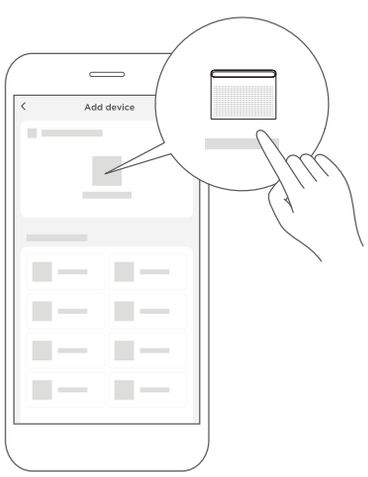

6. Follow the steps in the app to connect your device to the wireless network. If your device fails to connect, follow the additional instructions in the app.device category e.g. Portable AC.2) If no such message appears, proceed as follows:



Controlling the device

After pairing successfully, a card will be created for the device in the SmartHome app. Shortcuts for basic functions will appear on the card such as changing the temperature or switching the device on or off. Tapping on the card, will reveal additional features and settings. The actual UI design may look different from examples due to app updates.

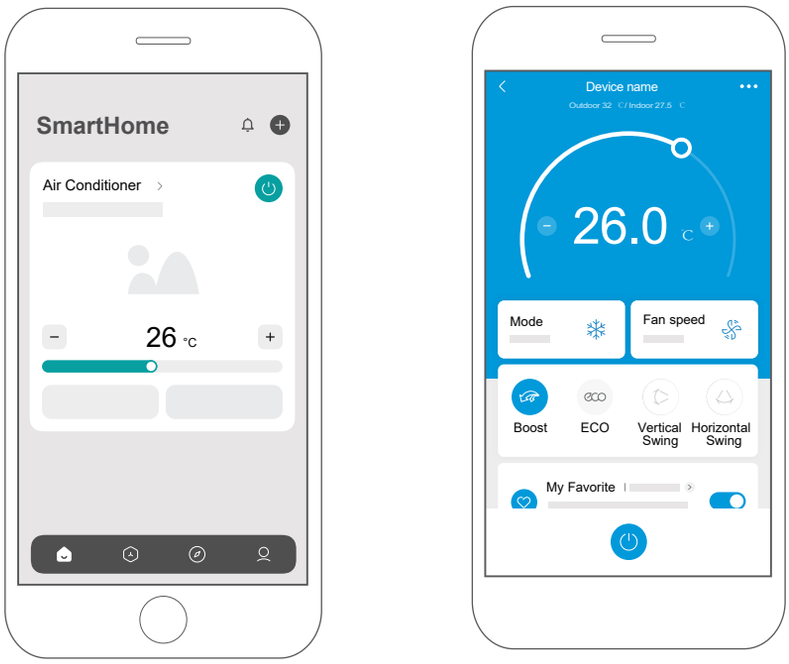

I ECO-AI Saving(Not all units)

Functional value:

- Power saving without sacrifice physical comfort when turning on the AI Saving.
- Giving the air conditioner refined control to improve stability, continuity and comfort of control.
- Giving air conditioners the goal of adapting to thermal loads + demand preferences, more closely matching user demand preferences.

Features and instructions:

Based on AI algorithms and temperature prediction model, the compressor frequency and the internal fan speed are adjusted so as to change the room temperature, humidity and air speed to save energy and keep comfort.

Precautions:

- Must be opened via APP.
- Need to keep the device online.
- Not available with some other functions, Please check the APP for details.

1 How to use Matter

Matter is a connectivity technology that unifies the smart home by allowing devices and ecosystems (such as Alexa, Google Home and Apple Home) to speak the same language thus creating exciting new features and use cases.

To use Matter, you will need at least one Matter enabled smart speaker from Amazon, Google or Apple, and it's respective app.

- If you have a Matter enabled smart speaker, please proceed to the "How to use Matter" instructions on the following pages.
- If you don't have a Matter enabled smart speaker, you won't be able to use Matter right now. However, you can still achieve full functionality of the product by using our SmartHome app. To do this, proceed to the "How to use SmartHome app" section back on page 20.

Connect Your Air Conditioner Through Matter

⚠ Make sure your mobile device is connected to your wireless router.
Wireless router should support and turn on IPv6. Please make sure your smartphone connect to 2.4G but not 5G network.

STEP 1: Connect to Smart Speakers

Select your preferred ecosystems (Alexa, Google Home or Apple Home) and make sure you've got one of their Matter enabled products (such as their smart speakers) connected to your wireless router.

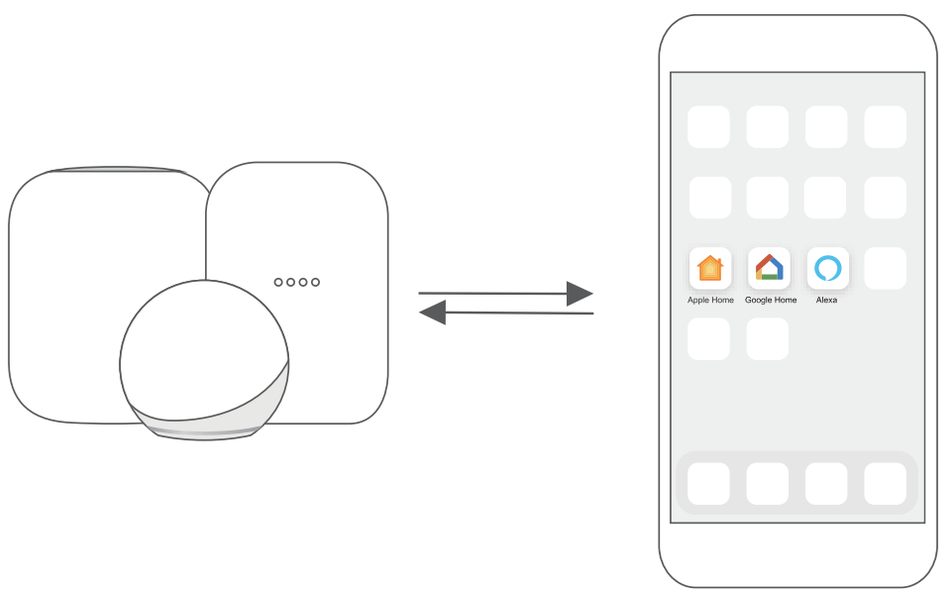

STEP 2: Turn On Bluetooth

Turn on Bluetooth on your mobile device.

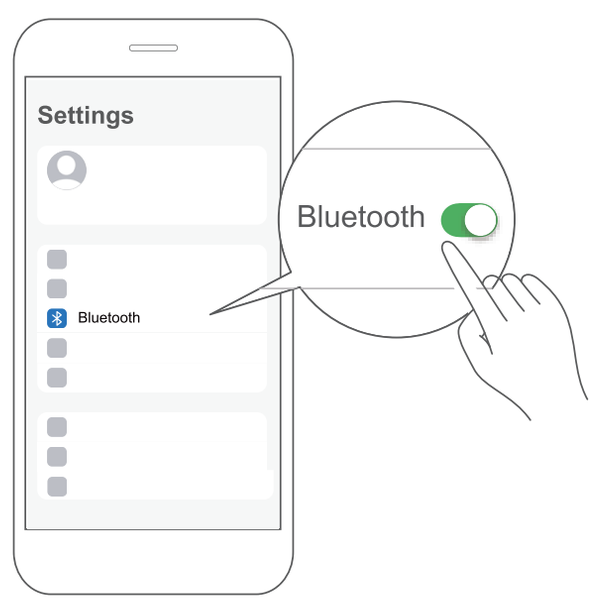

STEP 3: Enter AP Mode

Windows AC: Hold down the CONNECT / Power button for 3 seconds to begin the pairing process (“AP” will appear on the AC’s display).

Portable AC: Hold down the SWING / Power button for 3 seconds to begin the pairing process (“AP” will appear on the AC’s display).

NOTE

Entering AP pairing mode may vary between different AC models, please follow the instructions of the AC panel.

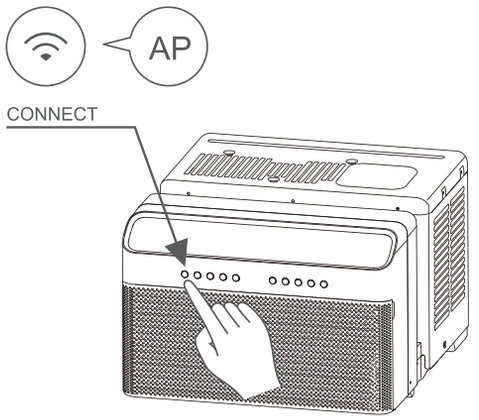

Window AC

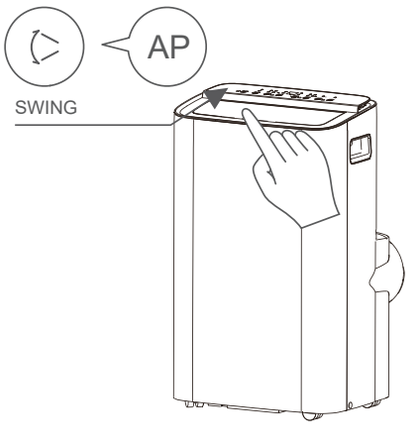

Portable AC

STEP 4: Open App

Open the Alexa, Google Home or Apple Home app on your mobile device.

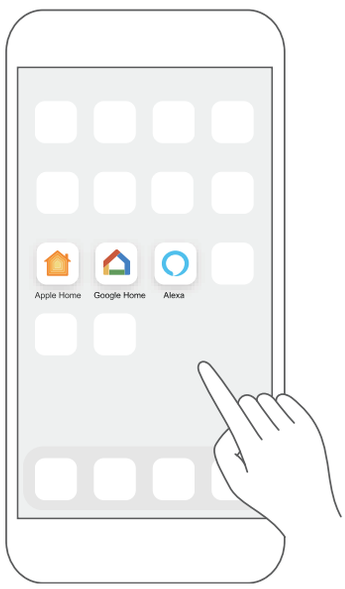

STEP 5: Scan Matter QR code

Tap the “+” and “Add Device/ Accessory” or tap “+Add” in your app and then select Matter device and scan the Matter QR code found on the side of the AC device.

Follow the respective instructions in the Alexa, Google Home or Apple Home app to complete the pairing process.

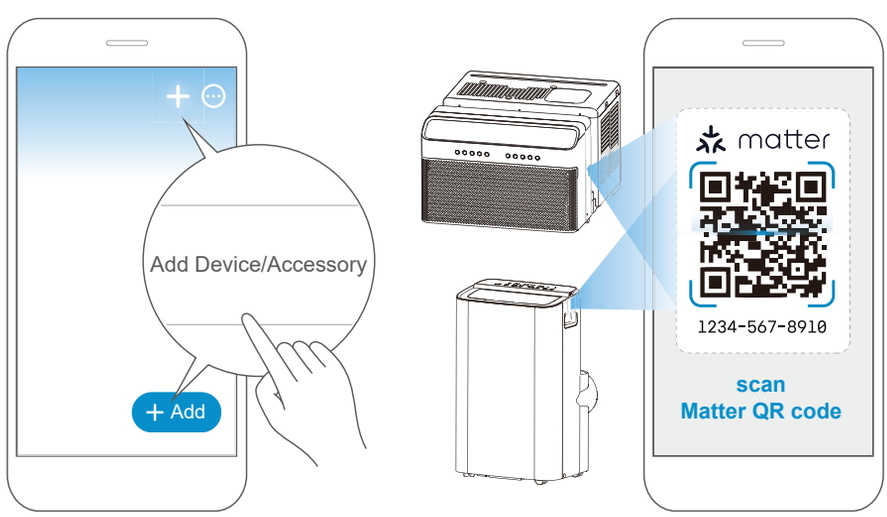

STEP 6: Control Device

After pairing is successful, you can control your AC's temperature and mode settings, etc. through the respective ecosystem app and smart speaker.

Due to a compatibility issue, the temperature value shown in the Alexa, Google Home or Apple Home app may be 1 degree different from that displayed on the air conditioner. However, this will not impact the device's ability to cool the room.

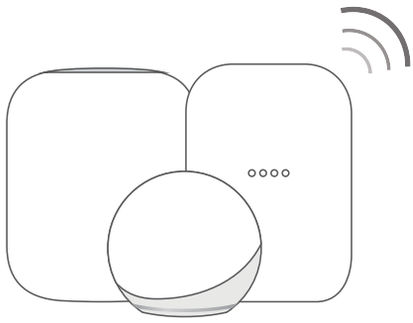

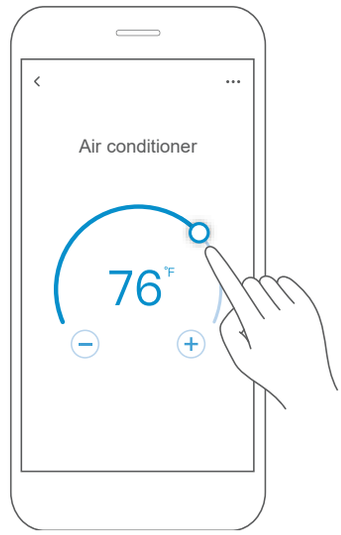

App & Smart Speakers can support Matter only when using these versions or above.

Device	Version
iPhone	iOS16.5
Apple Home Pod	16.5
Android	Google Play services min version: 22.36.15 Google Home app (GHA) min version: 2.58.24.1 - dogfood
Google Home Hub	Google Hub fi rmware min version: 1.56.324896 (appears on hub as Chromecast fi rmware version)
Alexa App	2.2.536317
Alexa Echo Device	9094439556

NOTE

- Setup processes and features may vary between ecosystems.
- The functions shown in the Alexa, Google Home or Apple Home apps may change with updates to their products or apps.
- Make sure the Matter enabled app is up to date to ensure the best experience.
- Periodically, we will update the device's software to improve the experience. Device software updates can be accomplished through the SmartHome app.
- matter is developed by the Connectivity Standards Alliance TM. This brand, related logos, and marks are trademarks of the Alliance, all rights reserved.
- Use of the Works with Apple badge means that an accessory has been designed to work specifically with the technology identified in the badge and has been certified by the developer to meet Apple's performance standards. Apple is not responsible for the operation of this device or its compliance with safety and regulatory standards.

■ Declaration of conformity

FCC ID: 2ADQOMDNA23
IC: 12575A-MDNA23

This device complies with Part 15 of the FCC Rules and Industry Canada's licenceexempt RSSs.

Operation is subject to the following two conditions:

(1) This device may not cause interference;
(2) This device must acceptany interference,including interference that may cause undesired operation of the device.

Only operate the device in accordance with the instructions supplied.
Changes or modifications to this unit not expressly approved by the party responsible for compliance could void the user's authority to operate the equipment.
This device complies with FCC radiation exposure limits set forth for an uncontrolled environment. In order to avoid the possibility of exceeding the FCC radio frequency exposure limits, human proximity to the antenna shall not be less than 20cm (8 inches) during normal operation.

NOTE:

This equipment has been tested and found to comply with the limits for a Class B digital device, pursuant to part 15 of the FCC Rules. These limits are designed to provide reasonable protection against harmful interference in a residential installation.
This equipment generates, uses and can radiate radio frequency energy and, if not installed and used in accordance with the instructions, may cause harmful interference to radio communications. However, there is no guarantee that interference will not occur in a particular installation. If this equipment does cause harmful interference to radio or television reception, which can be determined by turning the equipment off and on, the user is encouraged to try to correct the interference by one or more of the following measures:
--Reorient or relocate the receiving antenna.
--Increase the separation between the equipment and receiver.
--Connect the equipment into an outlet on a circuit different from that to which the receiver is connected.
--Consult the dealer or an experienced radio/TV technician for help.

We, hereby declare that this device is in compliance with the relevant provisions of RE Directive 2014/53/EU. A copy of the full DoC is attached (Europen Union products only).

Cleaning, Maintenance, and Storage

⚠ WARNING

For your safety, the information in this manual must be followed to minimize the risk of personal injury. Failure to follow these instructions could allow ***mold, dust, and debris to accumulate in the air conditioner and can lead to respiratory health issues.***

- We recommend that two people remove and install the U air conditioner.
- All parts supplied must be used and proper installation procedures outlined in this instruction must be followed when installing this AC.
- When handling the unit be careful to avoid cuts from sharp metal edges and aluminum fins on the front and rear coils. Wearing gloves is recommended.
- Turn the unit off and unplug the air conditioner before cleaning.

⚠ CAUTION

To reduce the risk of health issues related to mold, inspect your air conditioner frequently and follow the cleaning guidelines included in the user manual. If dust accumulates, mold can grow in an air conditioner because of the moist environment.

All air conditioners cool by removing heat and moisture from the air. If dust accumulates, mold can grow in an air conditioner because of the moist environment. Mold can lead to health issues for some consumers. To reduce the moisture level and possible mold growth, you should confirm proper installation and follow all maintenance instructions. Fan mode can be used to help reduce the moisture level in the product. Refer to the operating instructions to enter Fan mode.

In areas where mold is prevalent or when a resident is sensitive to allergens, you should also consider using an air cleaner to reduce the amount of dust and mold in your home and, in turn, your air conditioner. In areas with high humidity, you may also want to consider the use of a dehumidifier to further reduce the overall moisture in the air. For more information, visit https://www.midea.com/us/support/faq/air-conditioners/all-window-air-conditioners.

Air Filter Cleaning

The air filter should be checked at least once every two weeks to see if cleaning is necessary. Trapped particles in the filter can build up and cause an accumulation of frost on the cooling coils and reduce performance.

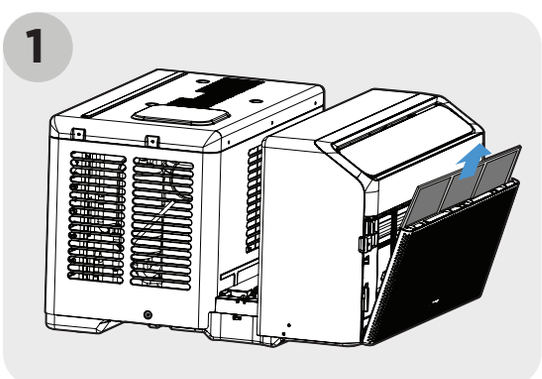

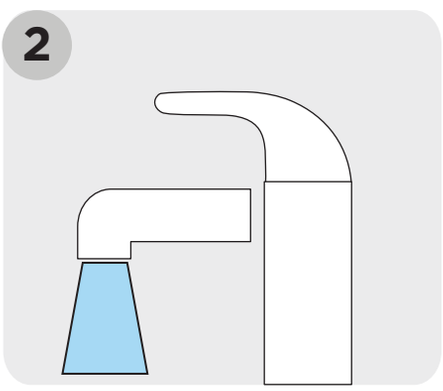

Video Guide

- Move the vent handle to the Vent Closed position (if applicable) and open the front panel.
- Take the filter by the center and pull up and out.
- Wash the filter using liquid dishwashing detergent and warm water. Rinse filter thoroughly. Gently shake excess water from the filter. Be sure the filter is thoroughly dry before replacing. Instead of washing, the filter may be vacuumed clean.

Fan Cleaning

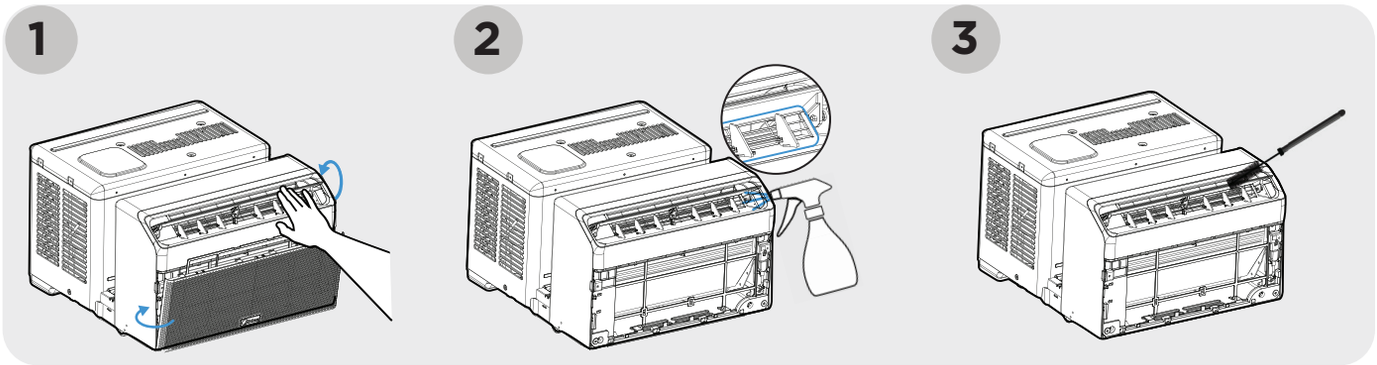

- Remove front grill, filter(s), and drain plug. Manually rotate the front louver to the open position.
- Spray warm water on the fan wheel and shroud to remove any accumulated debris.
- Use a brush to rotate the fan wheel and remove additional debris from the fan. Repeat water/ brush steps until fan is clean.
- Reinstall front grill, filter(s), and drain plug.

Coil Cleaning

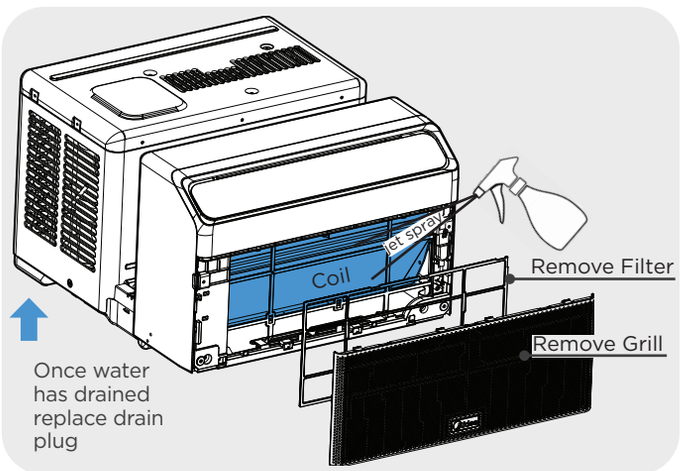

- Remove front grill, filter(s), and drain plug.
- Place a bucket under the bottom of the unit to catch any water that spills.
- Spray warm water on the evaporator coil fins to remove any accumulated debris.
- Spray the white plastic evaporator drain pan below the coil to flush.
- Use a towel to wipe up any remaining moisture on the evaporator drain pan.
- Reinstall the filter(s), front grill, and drain plug.

Drain Plug Replacement

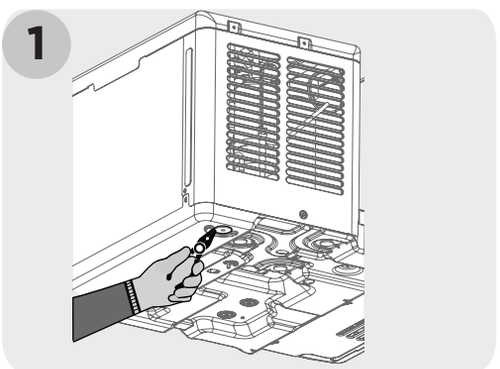

Locate drain plug on the back left corner of the outdoor portion of the unit. Use fingers or a pair of needle-nose pliers to remove the existing drain plug and discard.

Note: Any water in the base pan will drain out when plug is removed.

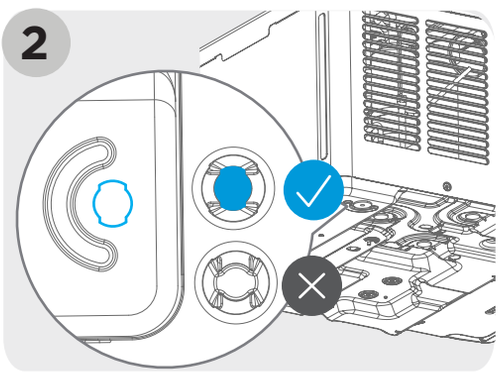

Place the rubber plug vertically, aligning it with the direction of the drain hole.

Video Guide

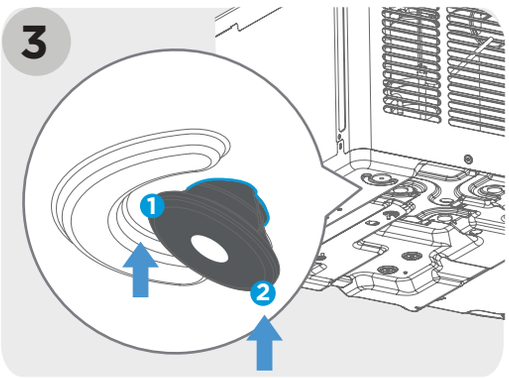

First, tilt the rubber plug at position 1 and insert it into the drain hole, then press down at position 2.

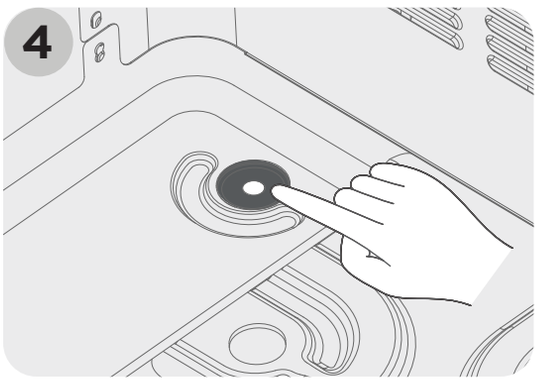

Press the remaining parts flat.
This plug allows water to slowly drip out. once a month check to see if water is dripping out. If plug stops dripping, replace with one of the extra drain plugs provided.

Winter Storage

- If you plan to store the air conditioner during the winter, remove it carefully from the window according to the installation instructions. Be careful not to spill any potentially standing water from the unit's base pan. If water is present, carefully drain it. Cover the unit with plastic or return it to the original carton.
- When not used for a long time. Please make sure that the water at the bottom of the product is drained before storing.
- Drain plug must be in place for proper function. Remove to drain the water before storage.

Back protective net Cleaning（on some models）

- To clean the back protective net, first switch off the unit, then use a brush to clean the net and use water to wash directly.

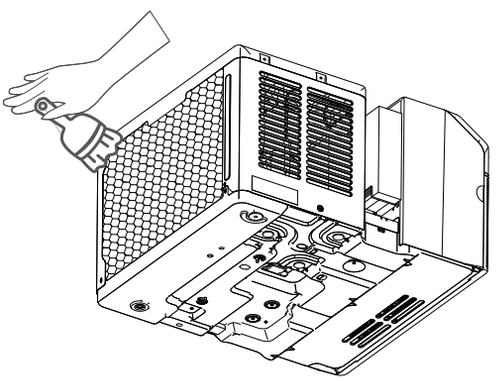

Troubleshooting

Before calling for service, review this list. It may save your time and expense. This list includes common occurrences that are not the result of defective workman-ship or materials in this appliance.

Problem	Solution
Air conditioner does not start.	Wall plug disconnected. Push plug firmly into wall outlet.
	House fuse blown or circuit breaker tripped. Replace fuse with time delay type or reset circuit breaker.
	Plug Current Device Tripped. Press the RESET button.
	Power is OFF. Turn power ON.
Air from unit does not feel cold enough.	Room temperature below 60°F (16°C). Cooling may not occur until room temperature rises above 60°F (16°C).
	Temperature sensor behind the air filter is touching the cold coil. Try to move it so it does not contact the cold coil.
	Set to a lower temperature.
	Compressor stopped when changing modes. Wait for 3 minutes after set to the COOL mode
	Check for potential obstructions blocking the outdoor intake/exhaust. Clear any obstructions.
Air conditioner cooling, but room is too warm- ice forming on cooling coil behind air filter.	Outdoor temperature below 64°F (18°C). To defrost the coil, set FAN ONLY mode.
	Air filter may be dirty. Clean filter. Refer to care and cleaning section. To defrost, set to FAN ONLY mode.
	Thermostat set too cold for night-time cooling. To defrost the coil, set to FAN ONLY mode. Then, set temperature to a higher setting.
Air conditioner cooling, but room is too warm- NO ice forming on cooling coil behind air filter.	Dirty or restricted air filter. Clean air filter. Refer to care and cleaning section.
	Temperature is set too high, then set temperature to a lower setting.
	Air directional louvers positioned improperly. Position louvers for better air distribution.
	Front of units is blocked by drapes, blinds, furniture, etc. - restricts air distribution. Clear blockage in front of unit.
	Any open doors, windows, or registers may allow cold air to escape. Close any doors, windows, or registers.
	The room may be too warm. Allow additional time to remove “stored heat” from walls, ceiling, floor, and furniture.
Air conditioner turns on and off rapidly	Dirty or restricted air filter. Clean air filter.
	Outside temperature extremely hot. Set FAN speed to a higher setting to bring air past cooling coils more frequently.
	Check for potential obstructions blocking the outdoor intake/exhaust. Clear any obstructions.
Noise when unit is cooling	It is normal to hear the airflow. If too loud, set to a slower FAN setting.
	Window vibration - poor installation. Refer to installation instructions or check with installer.

Problem	Solution
Water dripping INSIDE when unit is cooling.	Improper installation. Tilt air conditioner slightly to the outside to allow water drainage. Refer to installation instructions - check with installer.
Water dripping OUTSIDE when unit is cooling.	Unit removing large quantity of moisture from humid room. This is normal during excessively humid days.
Remote Sensing Deactivating Prematurely (Only remote models)	Remote control not located within range. Place remote control within 20 feet and pointed in the general direction of the air conditioner unit.
	Remote control signal obstructed. Remove obstruction.
Room too cold	Set temperature too low. Increase set temperature.
Noise when unit is working	A “da-da” sound may occur for thirty seconds when the unit is turned on due to the compressor starting. It is normal.

Warranty

Air Conditioner Limited Warranty

Your product is protected by this Limited Warranty:

Warranty service must be obtained from Midea Consumer Services or an authorized Midea servicer.

Warranty

- Three years full warranty from the date of delivery or the purchase date, whichever is later.
- The date of delivery establishes the warranty period, should service be required.

Midea, through its authorized servicers will:

- Pay all costs for reparing or replacing parts of this appliance which prove to be defective in materials or workmanship.

Consumer will be responsible for:

- Diagnostics, removal, transportation and reinstallation cost required because of service.
- Costs of service calls that are a result of items listed under NORMAL RESPONSABILITIES OF THE CONSUMER**

Midea replacement parts shall be used and will be warranted only for the original warranty.

NORMAL RESPONSABILITIES OF THE CONSUMER**

This warranty applies only to products in ordinary household use, and the consumer is responsible for the items listed below:

1. Proper use of the appliance in acordance with instructions provided with the product.
2. Routine maintenance and cleaning necessary to keep the good working condition.
3. Proper installation by an authorized service professional in accordance with instructions provided with the appliance and in accordance with all local plumbing, electrical and/or gas codes.
4. Proper connection to a grouded power supply of sufficient voltage, replacement of blown fuses, repair of loosen connections or defects in house wiring.
5. Expenses for making the appliance accessible for servicing.
6. Damages to finish after intallation.

EXCLUSIONS

This warranty does not cover the following:

1) Failure caused by damage to the unit while in your possesion (other than damage caused by defect or malfunction), by its improper installation, or by unreasonable use of the unit, including without limitation, failure to provide reasonable and necessary maintenance or to follow the written installation and Operating Instructions.
2) Damages caused by services performed by persons other than authorized Midea costumer service; or external causes such as abuse, misuse, inadequate power supply or acts of God.
3) If the unit is put to commercial, business, rental, or other use or application other than for consumer use, we make no warranties, express or implied, including but not limited to, any implied warranty of merchantability or fitness for use or purpose.
4) Products without original serial numbers or products that have serial numbers which have been altered or cannot be readily determined.

NOTE: Some states do not allow the exclusions or limitation of incidental or consequential damages. So this limitation or exclusion may not apply to you.

IF YOU NEED SERVICE

Keep your bill of sale, delivery slip, or some other appropriate payment Record.

The date on the bill establishes the warranty period, should service be required.

If service is performed, its your best interest to obtain and keep all receipts.

This written warranty gives you specific legal rights. You may also have other rights that vary from state to state.

Service under this warranty must be obtained by following these steps, in order:

1) Contact Midea Consumer Services or an authorized Midea services at 1 866 646 4332.
2) If there is a question as to where to obtain service, contact our consumer relations Departament.

Midea

make yourself at home

www.midea.com

© Midea 2024 all rights reserved

CW0011UI-QB(NEW)A
16122000A85451